Springer

Driven by Automation





Company

Driven by Automation

Springer GmbH is helping to shape the development on the automation market with innovation, flexibility and high-quality products. Optimum process planning, high-quality automation components and matchless service are what make the company stand out. We use our capacities for innovation and work with you to develop and implement visionary ideas for tomorrow‘s technologies.

Toolings – process oriented

Standardized Springer gripper components and individual gripper systems are suitable for automation, even in other sectors than pressing plant and body shop automation. Should our product range not have anything suitable for you, we can also solve challenging tasks by designing and making special custom parts.

Technologies for the automation of tomorrow

Our technological developments mean we stay on top of market dynamics. We create visions for the production of tomorrow and so we play a significant role in shaping progress in factory automation.

Intelligent models and realistic simulations by Springer lead to safe, fast solutions as well as optimized processes. This is how we meet demands to significantly reduce development times and to make automation processes effective. This leads to faster commissioning and high system availability.

General safety instructions

- Observe the regulations for accident prevention and environmental protection.
- Observe the safety instructions and regulations of the country in which the product is used or operated.
- Only use Springer products that are in perfect working order.
- Persons assembling, operating, disassembling, or maintaining Springer products may not be under the influence of alcohol, other drugs, or medications that may affect their ability to respond.
- To avoid injuries due to unsuitable spare parts, only use accessories and spare parts approved by the manufacturer.
- Comply with the technical data and ambient conditions listed in the product documentation.
- If unsuitable products are installed or used in safety-relevant applications, this may result in unintended system operating states that may lead to injuries and/or equipment damage. Therefore, only use a product in safety-relevant applications if such circumstances are specifically stated and permitted in the product documentation.
- You may only commission the product if you have determined that the end product (such as a machine or system) in which the Springer products are installed meets the country-specific provisions, safety regulations, and standards for the specific application.

Conditions of use for Springer products

Intended use

- Proper use includes adherence to the operating conditions specified by Springer GmbH, for example the pressure and temperature range.
- Unauthorized conversions and changes to Springer products represent a safety risk and are therefore not permitted. Springer cannot accept any liability for any resulting damage.
- Springer products are designed for oil-free operation. If oiled compressed air is used, the initial lubrication of the products is washed out. For this reason, continue to use oiled compressed air to ensure the basic lubrication of the products.

Improper use

- Any use of the products outside the areas of application or under operating conditions that differ from those described in this catalogue is considered improper use.

For installation and mounting

- Always fasten Springer products without distortion and tension.
- Springer drives are used to convert the energy of compressed air into movement, forces and torques. Do not use the actuators as spring or damping elements, as this will result in additional loads.
- If the kinetic energy of the moving masses exceeds the permissible absorbable damping energy of the internal stop/damping system, use an additional external stop or a hydraulic shock absorber which absorbs the remaining kinetic energy.
- Springer drives are generally designed for oil-free operation, but for speeds > 1 m/s, we recommend using oiled compressed air.

Qualification of the personnel

- The installation and commissioning of the products requires basic mechanical, electrical and pneumatic knowledge, as well as knowledge of the appropriate technical terms. In order to ensure safe use, these activities may therefore only be carried out by qualified technical personnel or an instructed person under the direction and supervision of qualified personnel. Qualified personnel are those who can recognize possible hazards and institute the appropriate safety measures, due to their professional training, knowledge, and experience, as well as their understanding of the relevant regulations pertaining to the work to be done. Qualified personnel must observe the rules relevant to the subject area.

Waste disposal/recycling

Before disposal, of systems and single products, they must be disconnected from all suppliers (compressed air, electrics).

Potential Hazard
Systems and components must be safely de-energized and depressurized before disassembly work is carried out.

Risk of injury!
Have systems properly dismantled by qualified technical personnel or an instructed person under the direction and supervision of qualified personnel and disassembled into their components. Handle and dispose of used substances and materials, especially grease and solvents, properly and in accordance with national regulations.

Index

Company 2

General safety instructions 3

Conditions of use for Springer products 3

Waste disposal/recycling 3

1. Application Examples 5

2. Couplings and Change Rails 23

3. Connection Elements 101

4. Tooling Tubes 133

5. Suction Cups and Connections, Ejectors, Spring Plungers and Accessories 139

6. Seat for Double Plate Detection, Sensors and Connections 173

7. Transport Paddles, Deposits and Connections 199

8. Jaw Gripper, Magnet Gripper and Accessories 213

9. Elements for additional Motions 260

10. Racking Carrier 284

11. Hot Forming 290

Imprint 302

1. Application Examples

Index

TMZ-Assembly for Gripper Rail with Jaw Gripper 6
TMZ-Assembly for Gripper Rail with Jaw Gripper - (compact type) 7
TMZ-Assembly for Tubular with Jaw Gripper 8
TMZ-Assembly for Tubular with Jaw Gripper (compact type) 9
TMZ-Assembly with Swivel Drive and two Jaw Grippers (compact type) 10
TMZ-Assembly with Dovetail Coupling and Jaw Gripper (compact type) 11
TMZ-Assembly with 2-Channel-Coupling, Jaw Gripper and Transport Paddle 12
TMZ-Assembly - Double Tube Tooling 13
TMZ-Assembly - Unload Feeder for Hot Forming 14
TMZ-Assembly - Destack-Tooling for Hot Forming 15
TMZ-Assembly - Unstacker (front of line) 16
TMZ-Assembly - Robot-Press-Tooling 17
TMZ-Assembly - Shuttle 18
TMZ-Assembly - Tooling with Query (end of line) 19
TMZ-Assembly - Tooling Finished Part Stacking System 20
TMZ-Assembly - Tooling for Bayonet-Coupling with Spring Plungers 21
Quick-release coupling SKP for robot-press-tooling 22

TMZ-Assembly for Gripper Rail with Jaw Gripper

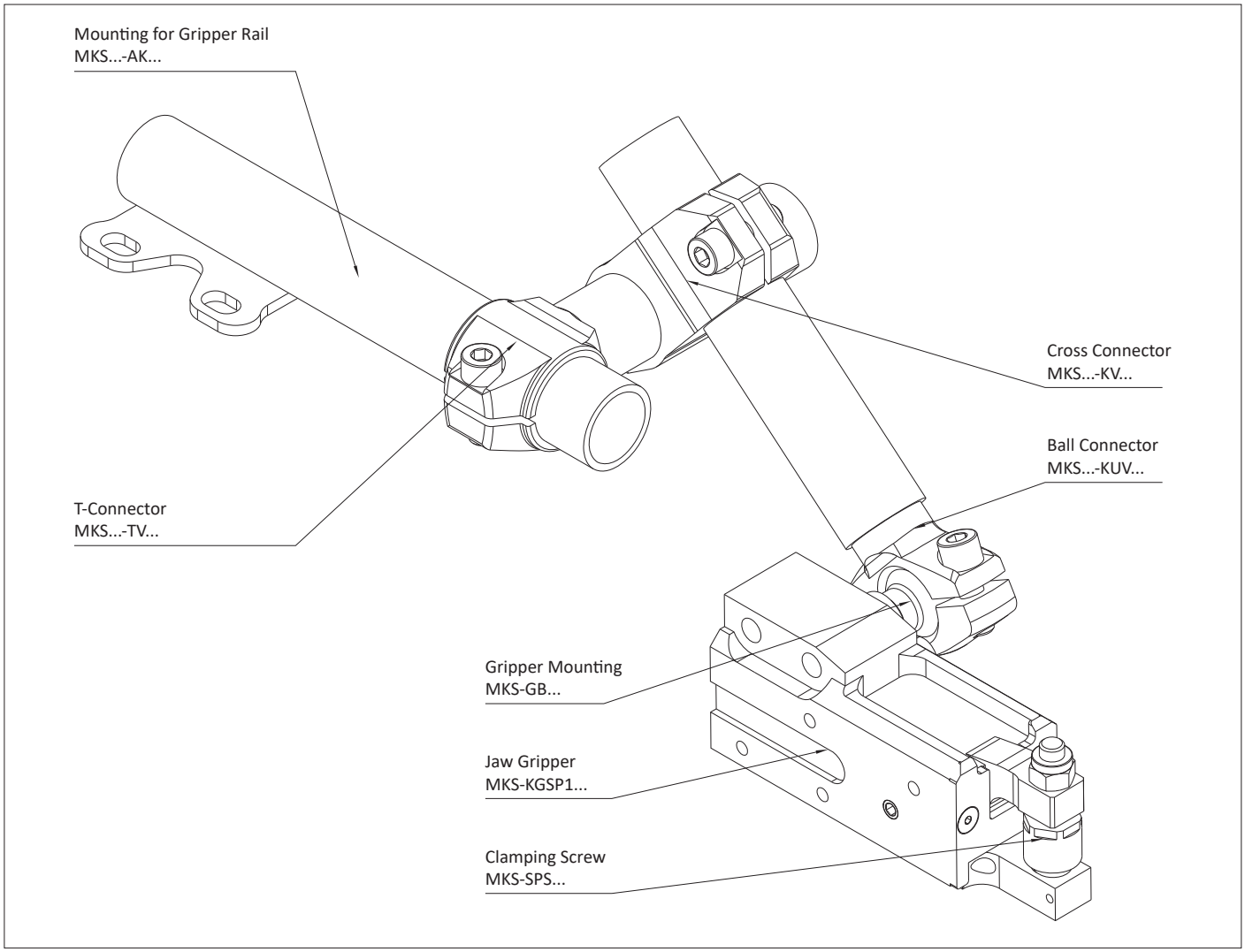

TMZ-Assembly for Gripper Rail with Jaw Gripper - (compact type)

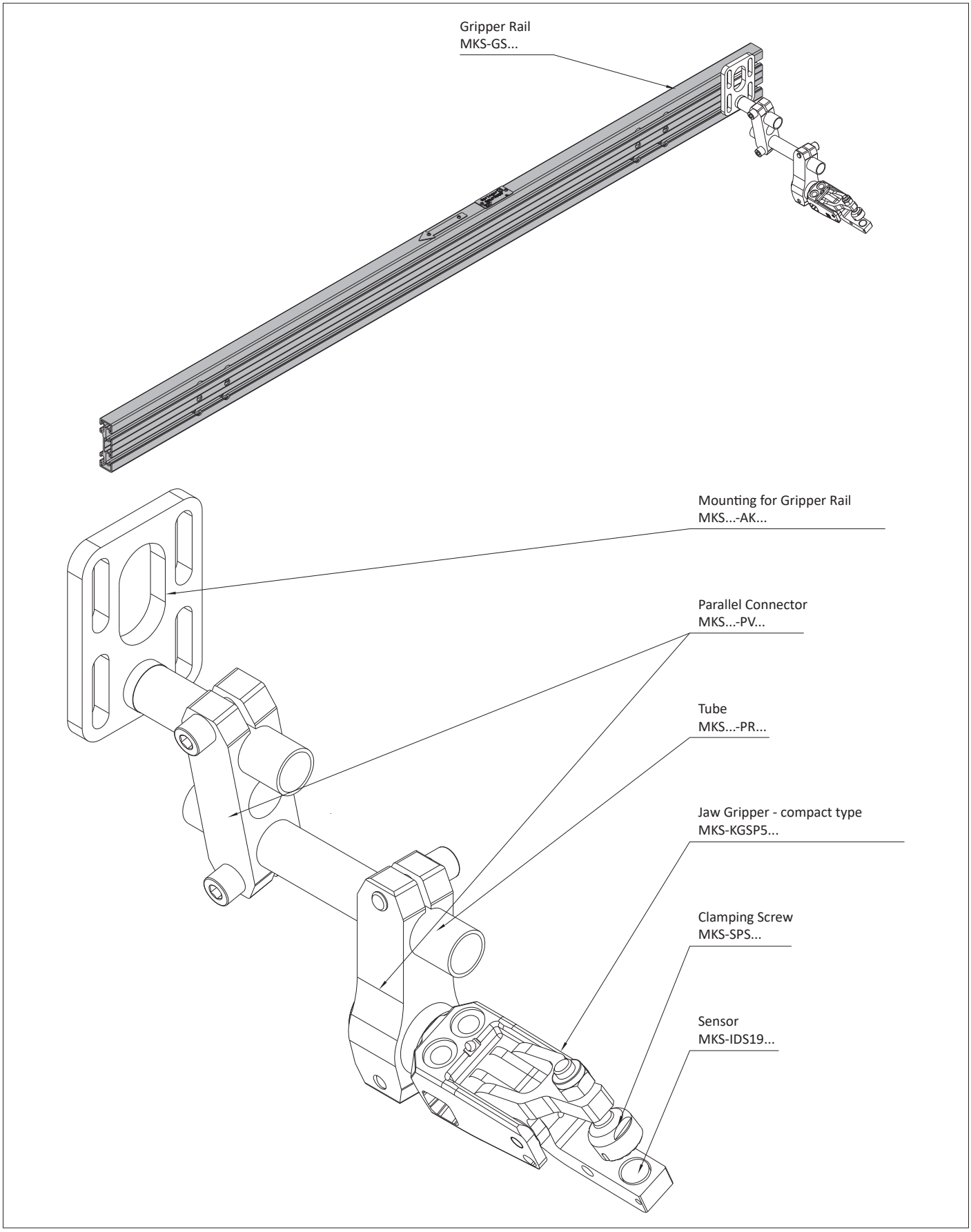

TMZ-Assembly for Tubular with Jaw Gripper

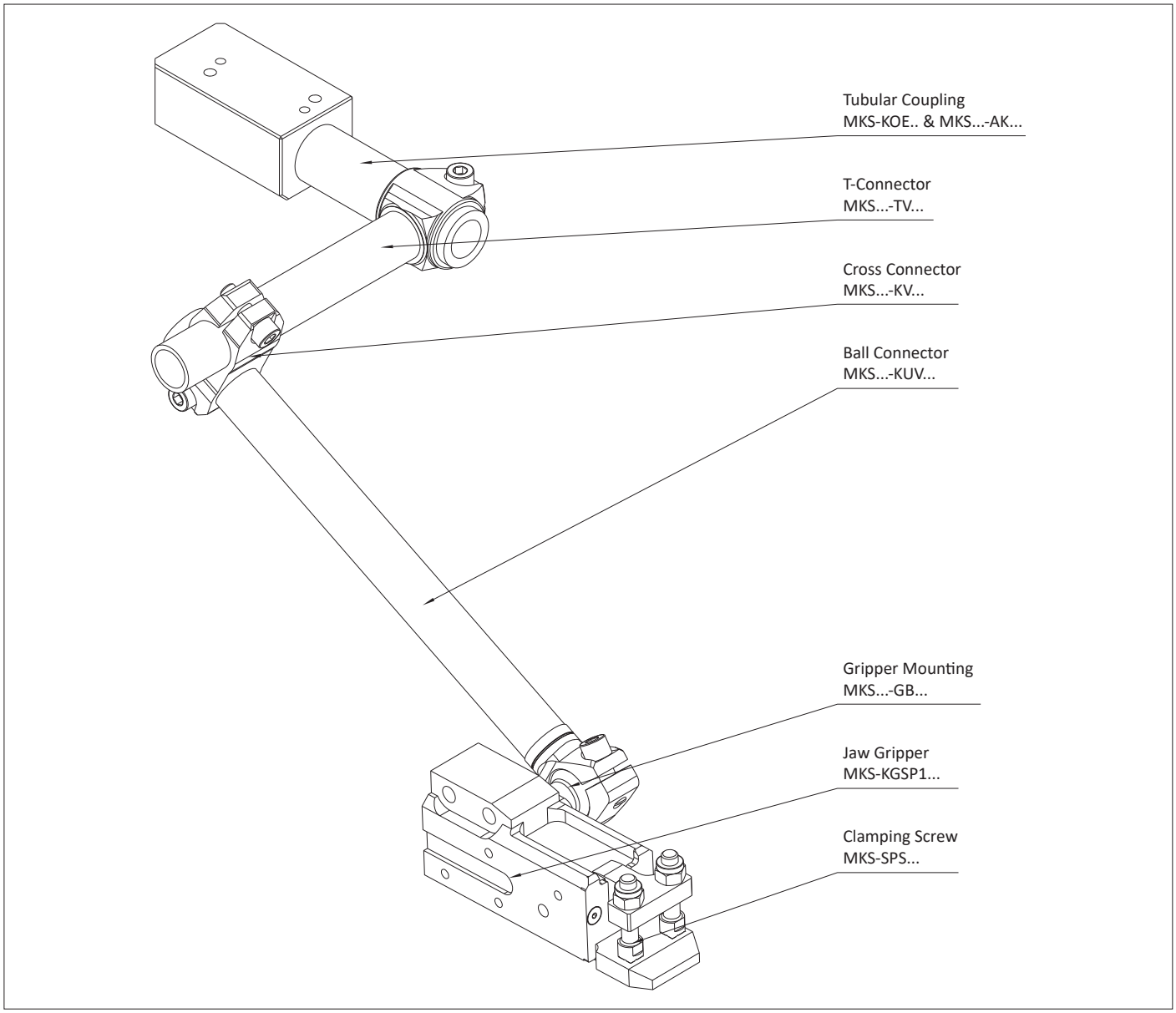

TMZ-Assembly for Tubular with Jaw Gripper (compact type)

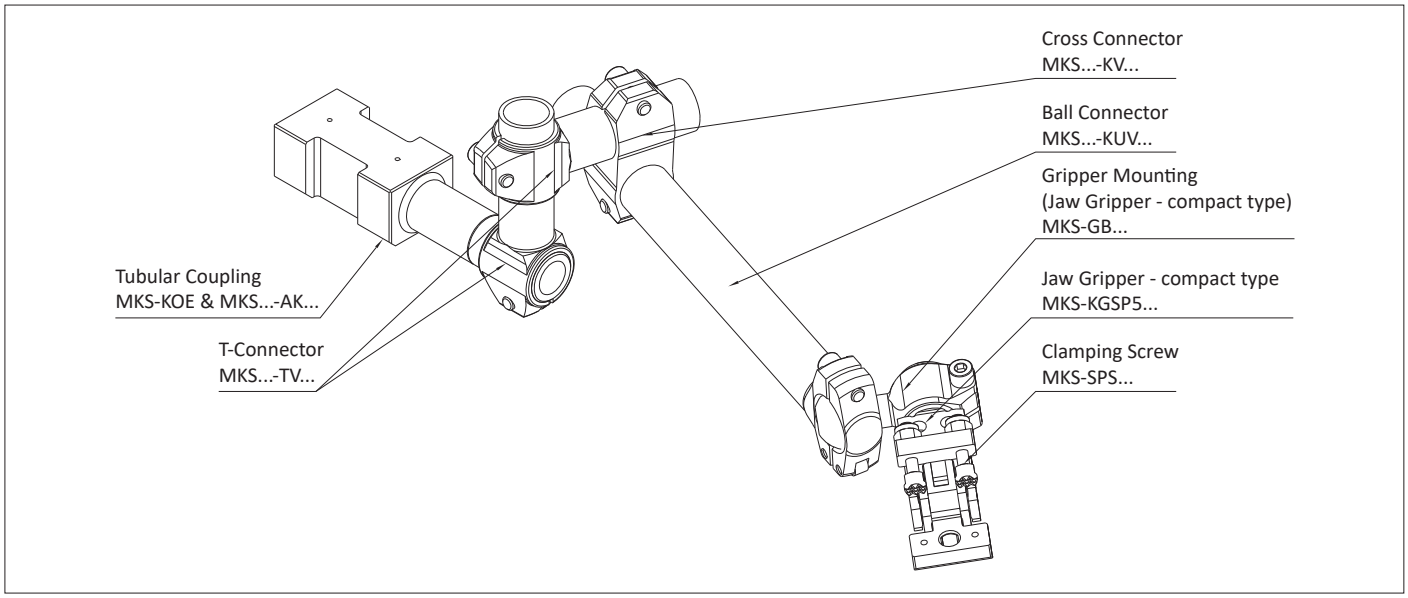

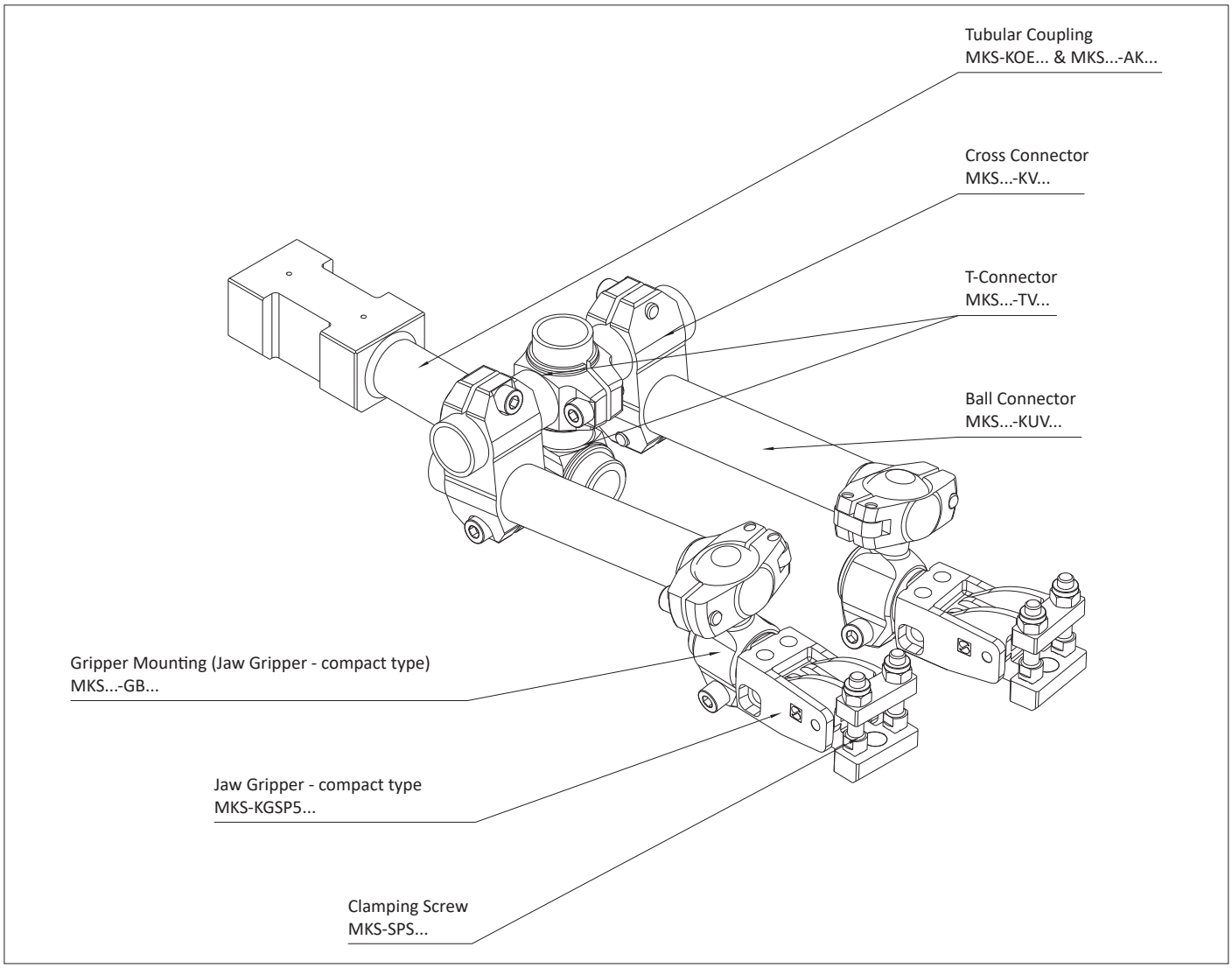

Technical changes and errors are subject to change without notice!
www.springer.group
Document Date: CW 12.2025

TMZ-Assembly with Swivel Drive and two Jaw Grippers (compact type)

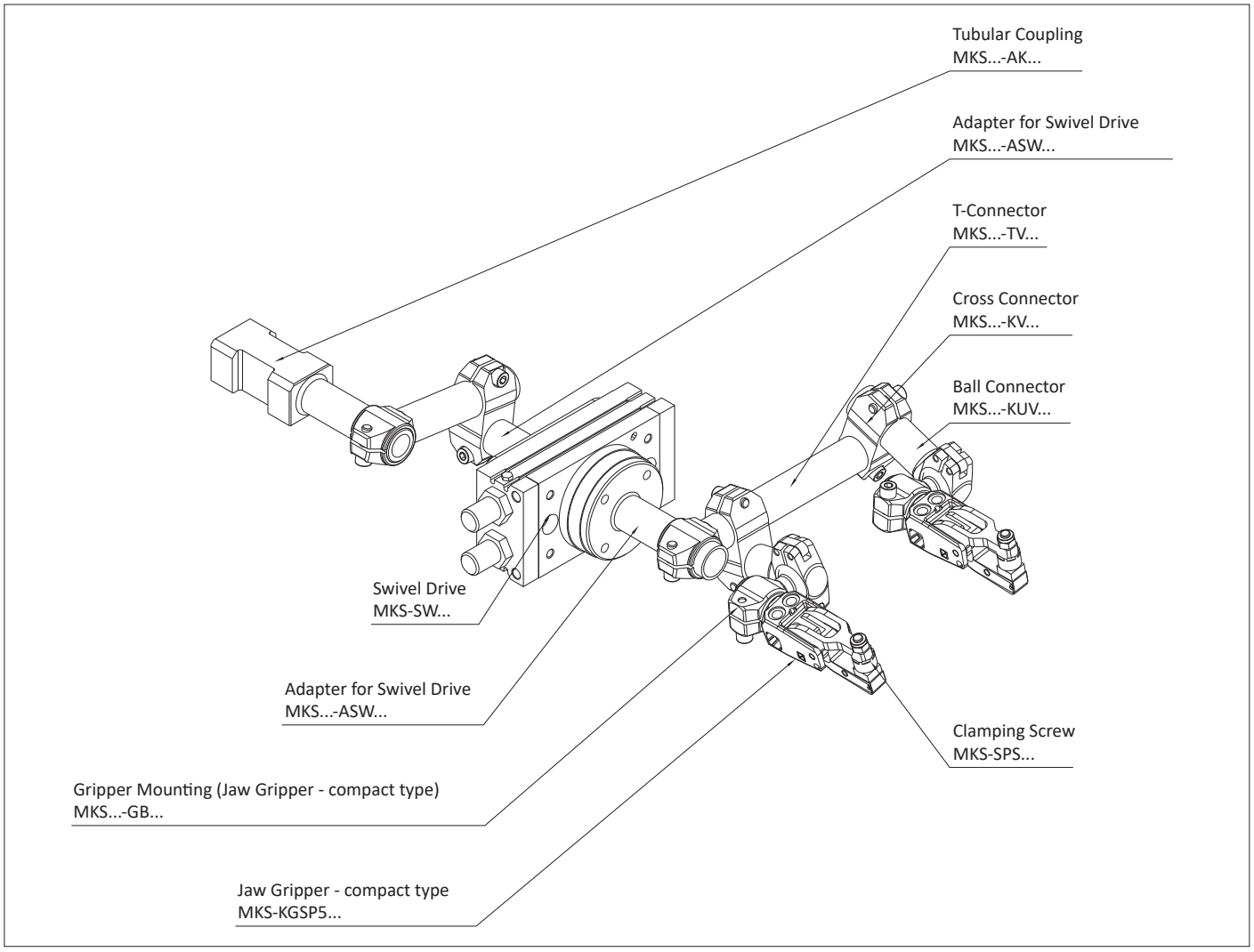

TMZ-Assembly with Dovetail Coupling and Jaw Gripper (compact type)

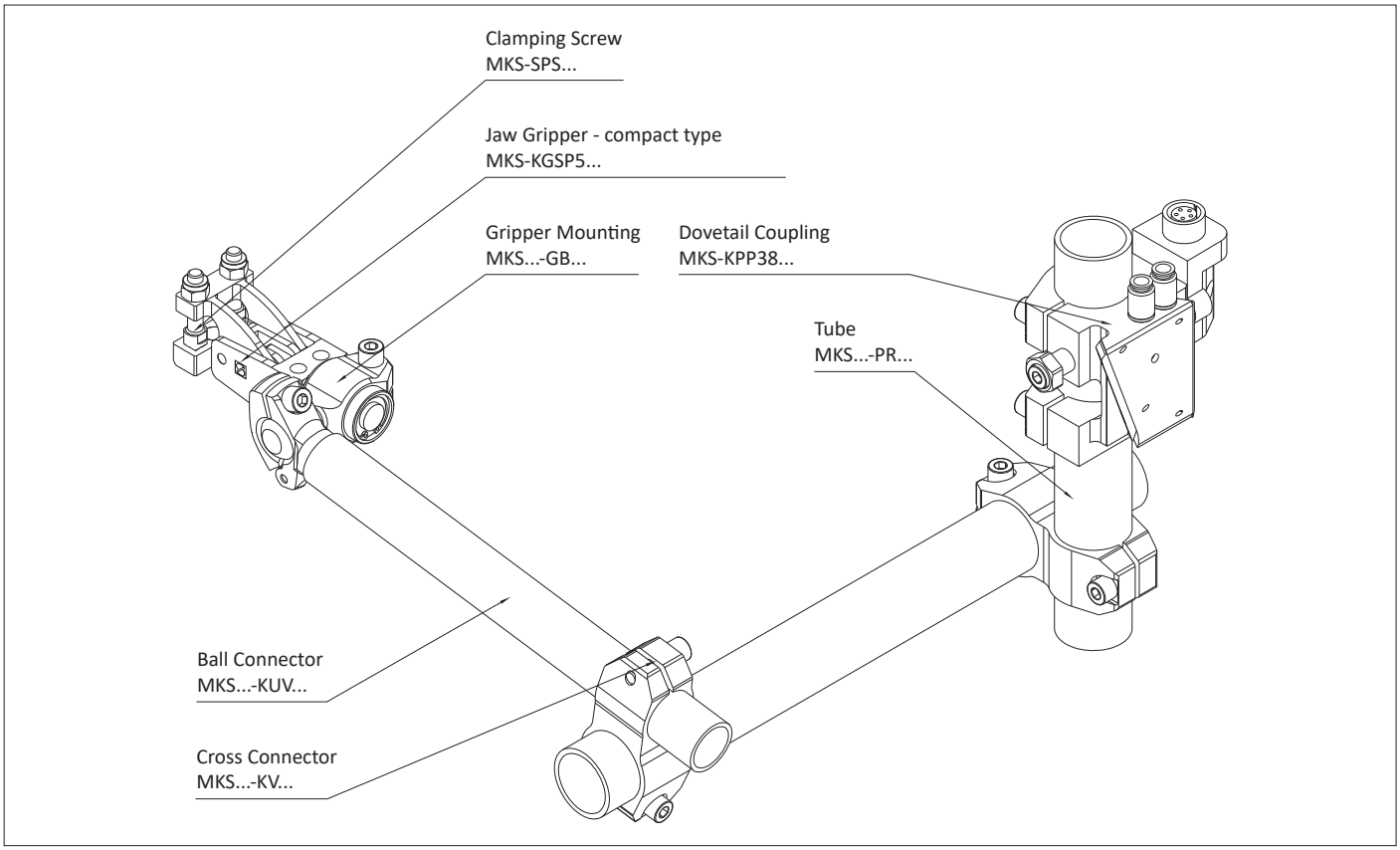

TMZ-Assembly with 2-Channel-Coupling, Jaw Gripper and Transport Paddle

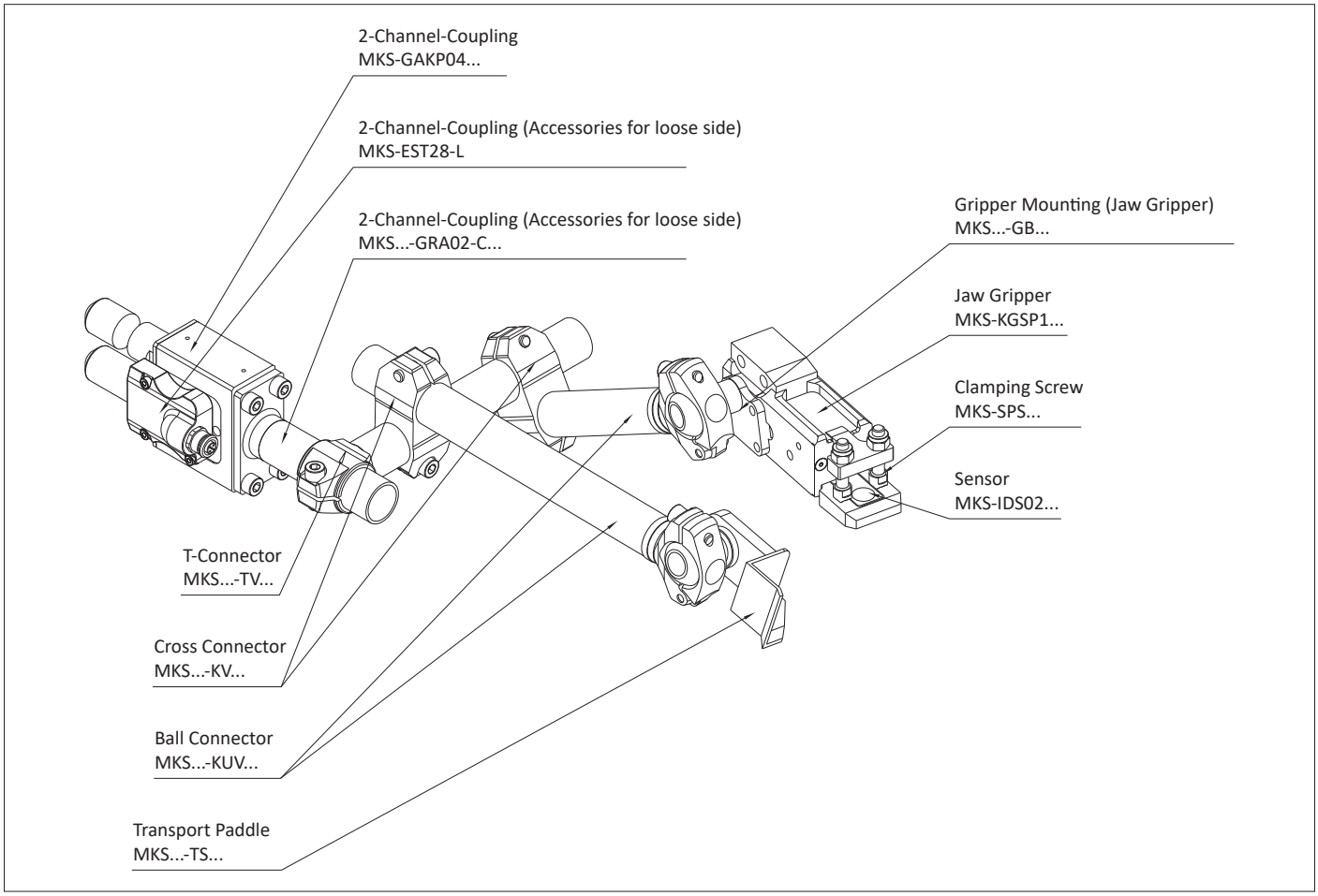

TMZ-Assembly - Double Tube Tooling

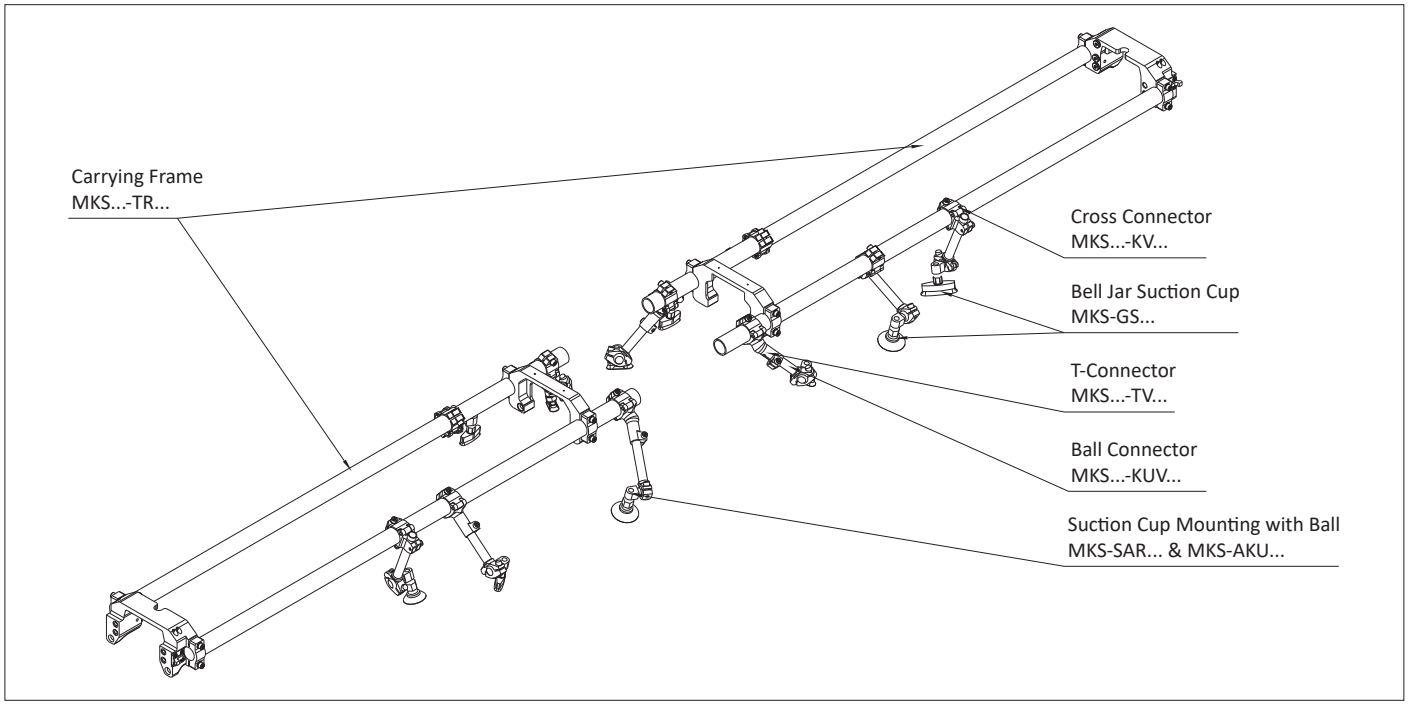

TMZ-Assembly - Unload Feeder for Hot Forming

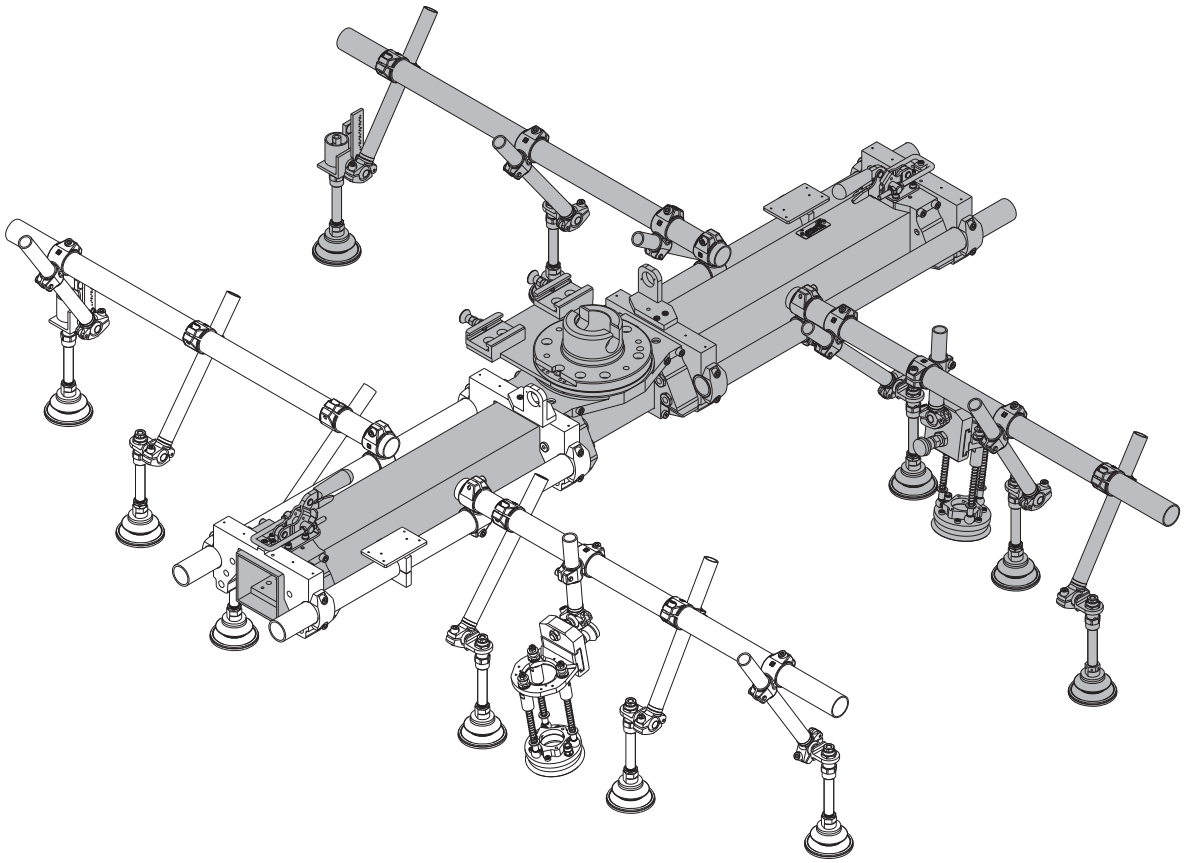

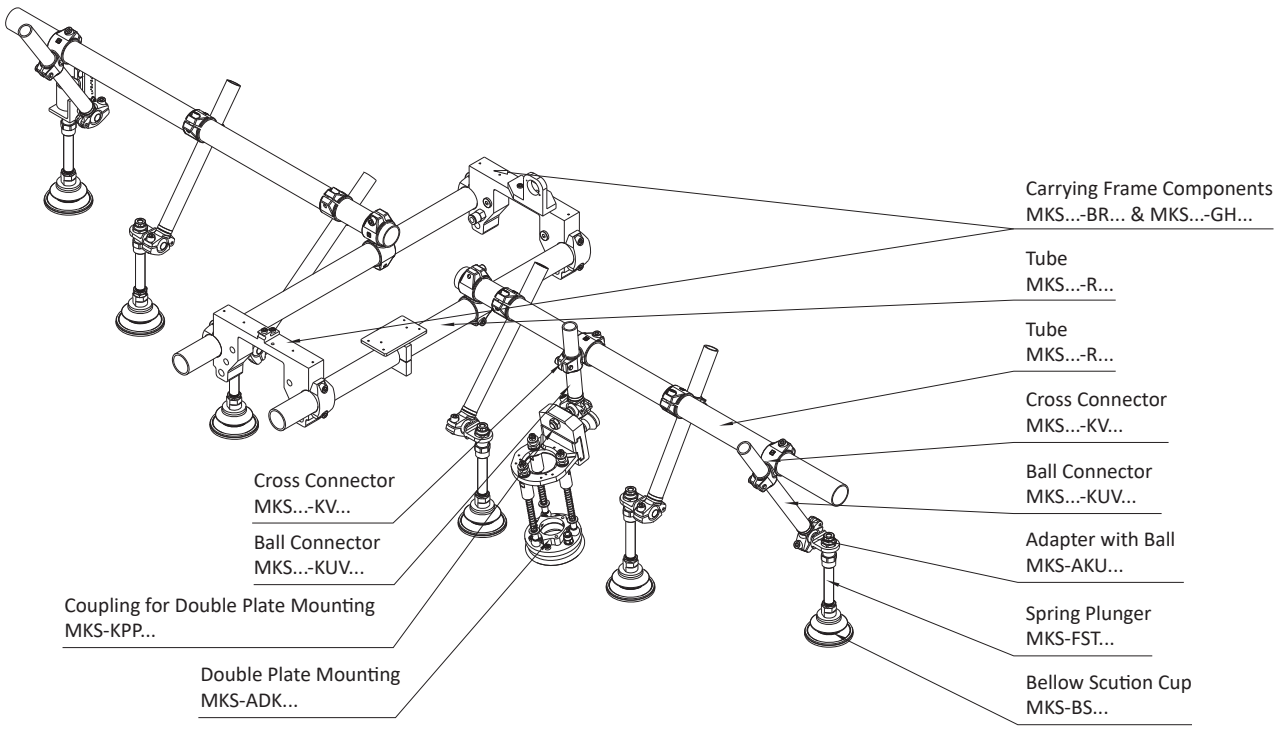

TMZ-Assembly - Destack-Tooling for Hot Forming

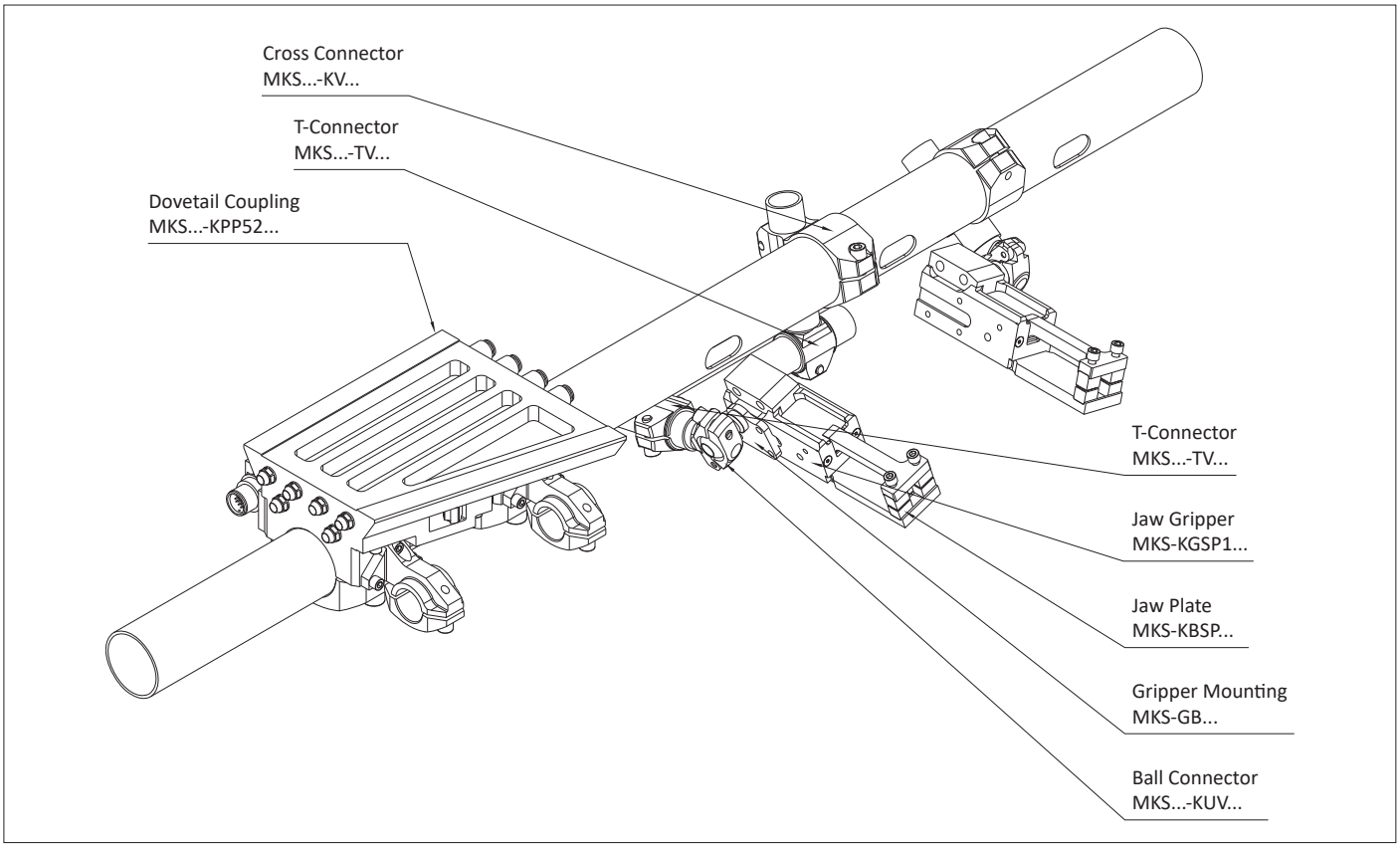

TMZ-Assembly - Unstacker (front of line)

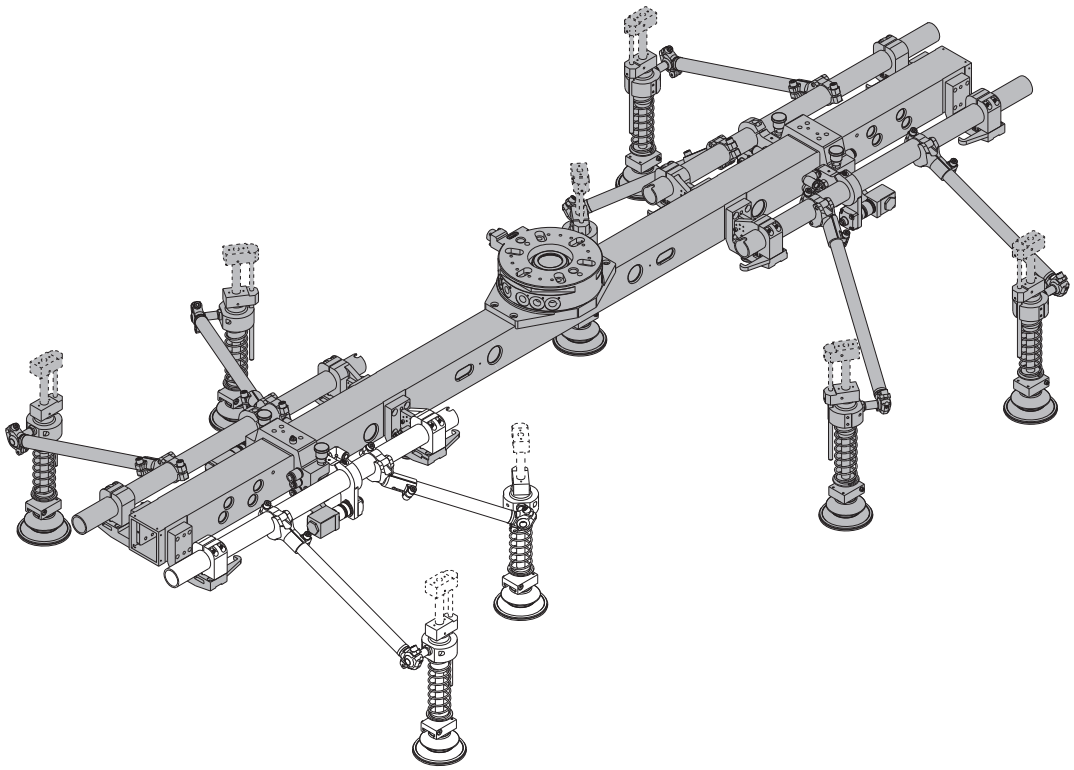

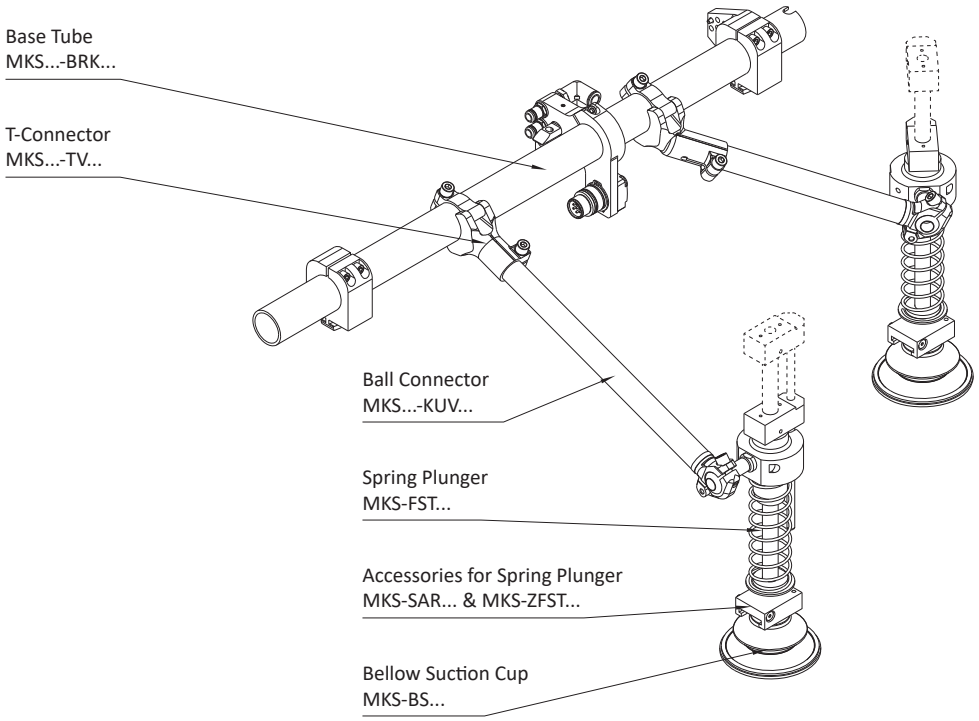

TMZ-Assembly - Robot-Press-Tooling

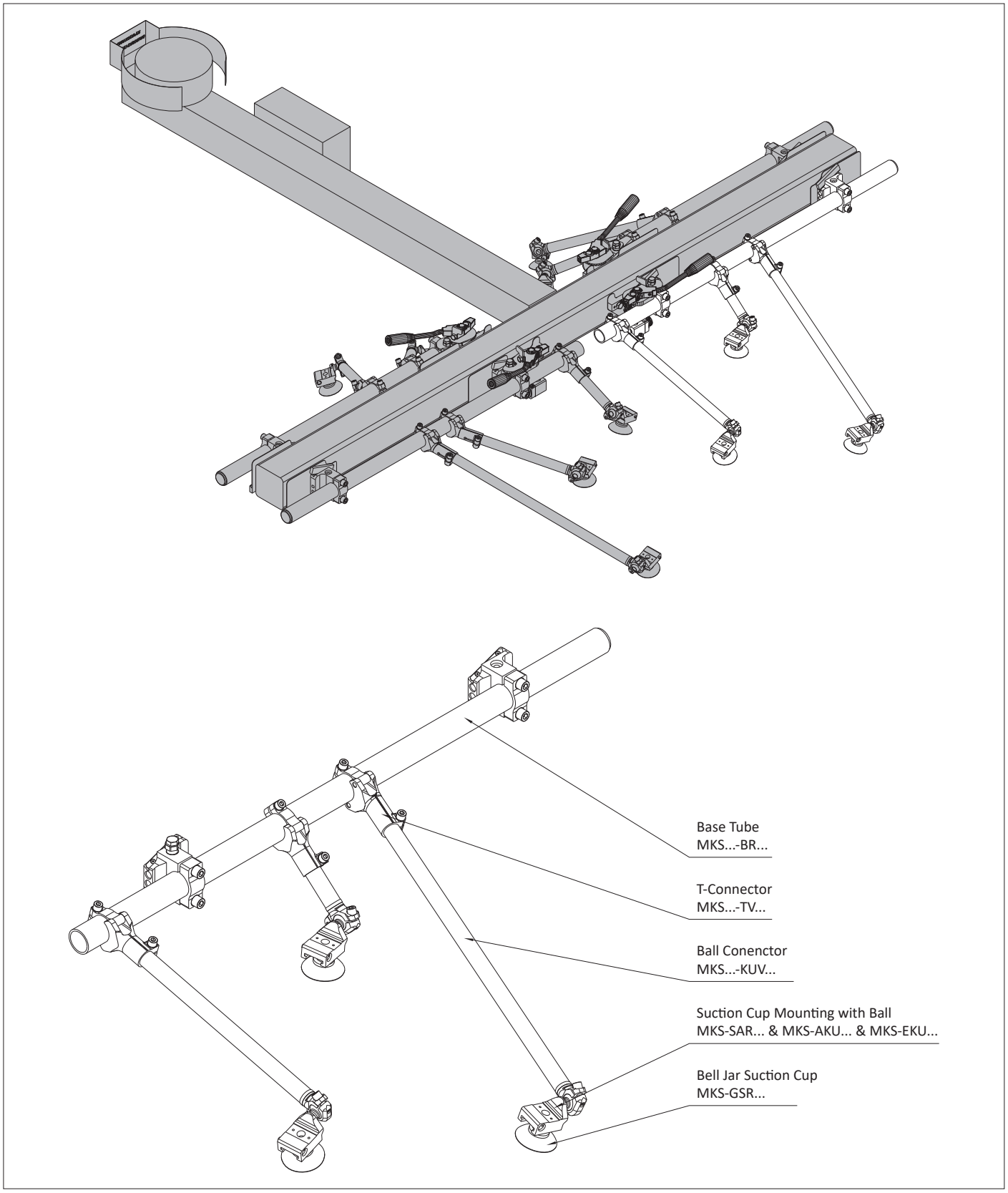

TMZ-Assembly - Shuttle

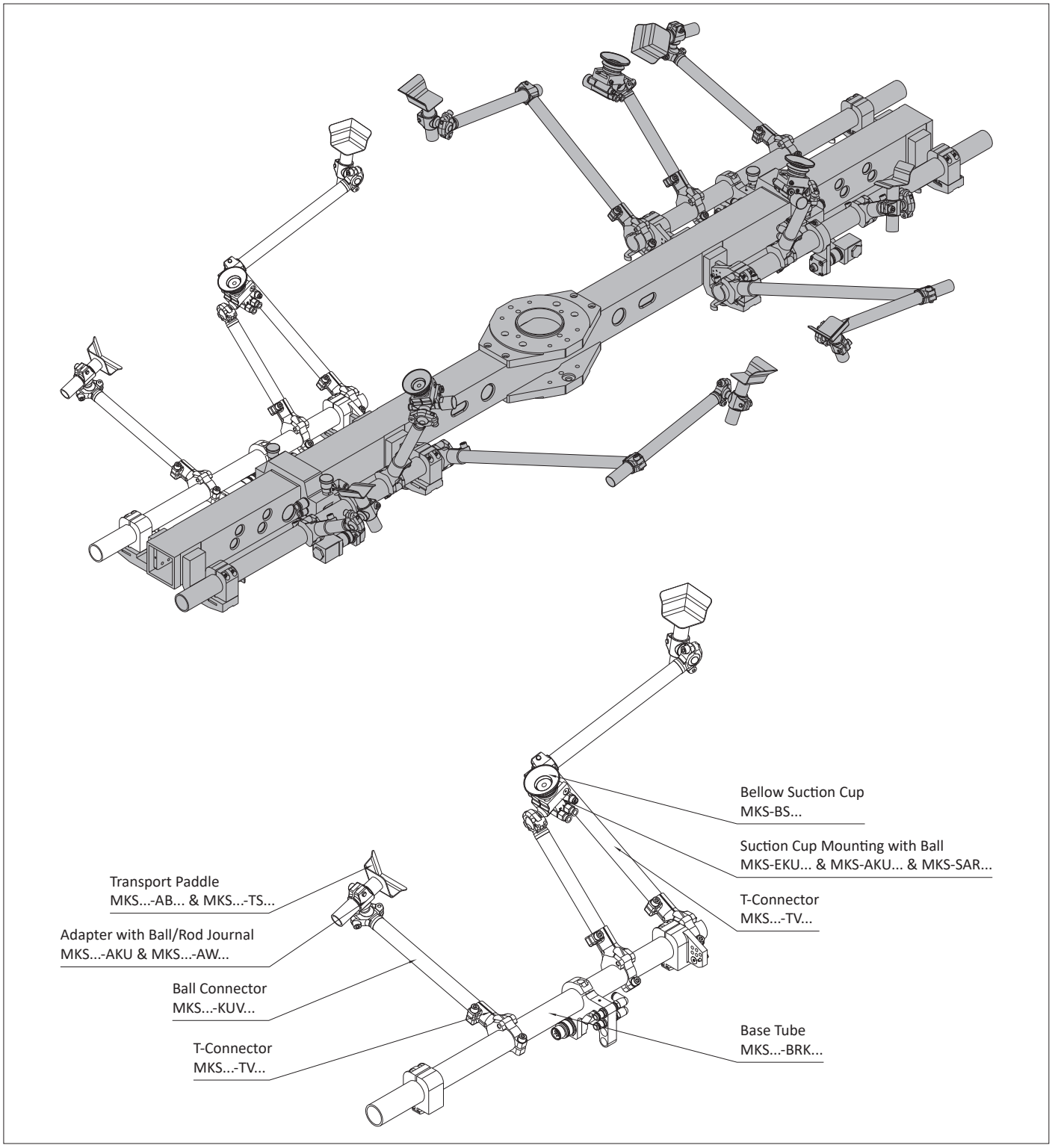

TMZ-Assembly - Tooling with Query (end of line)

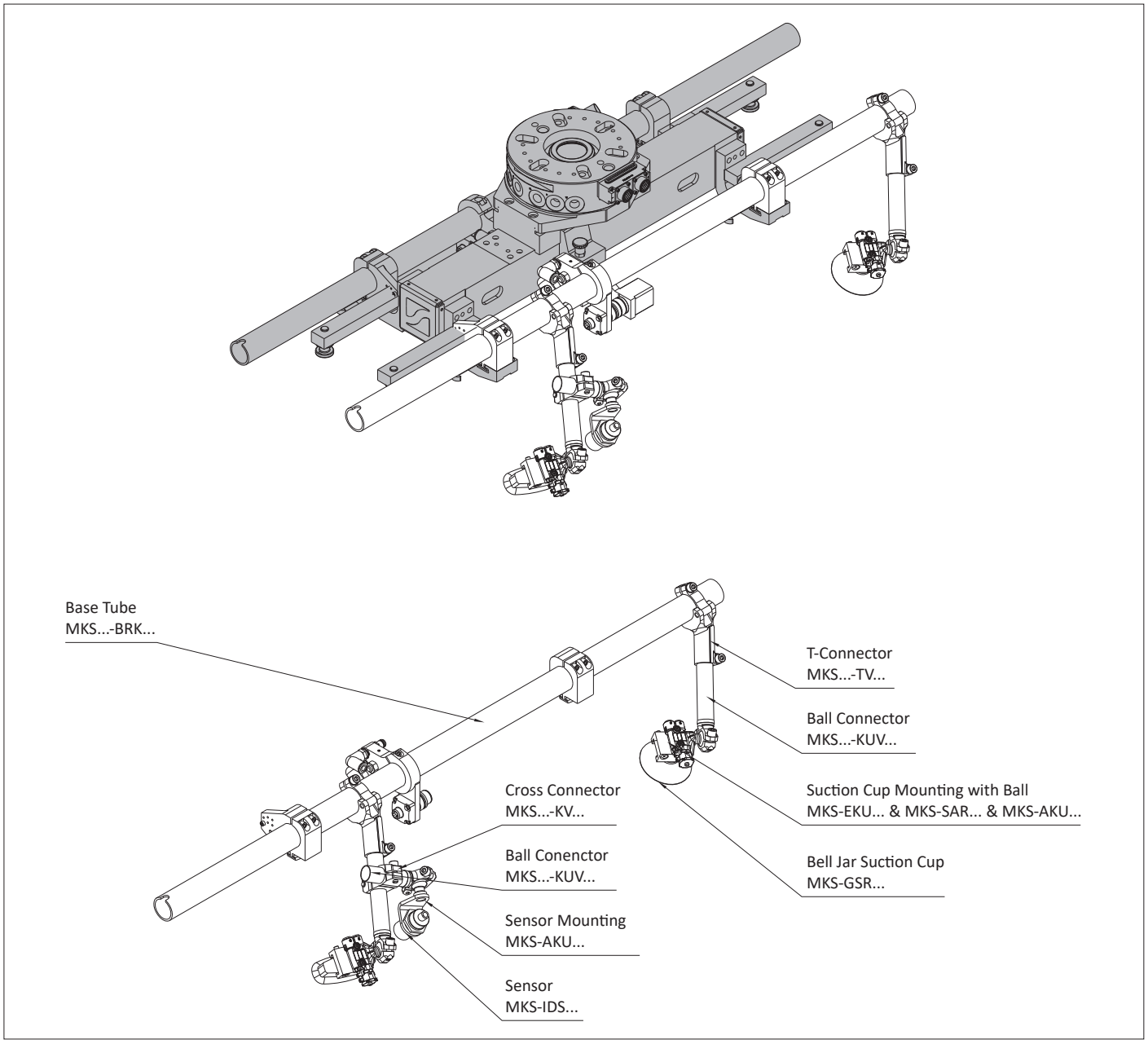

TMZ-Assembly - Tooling Finished Part Stacking System

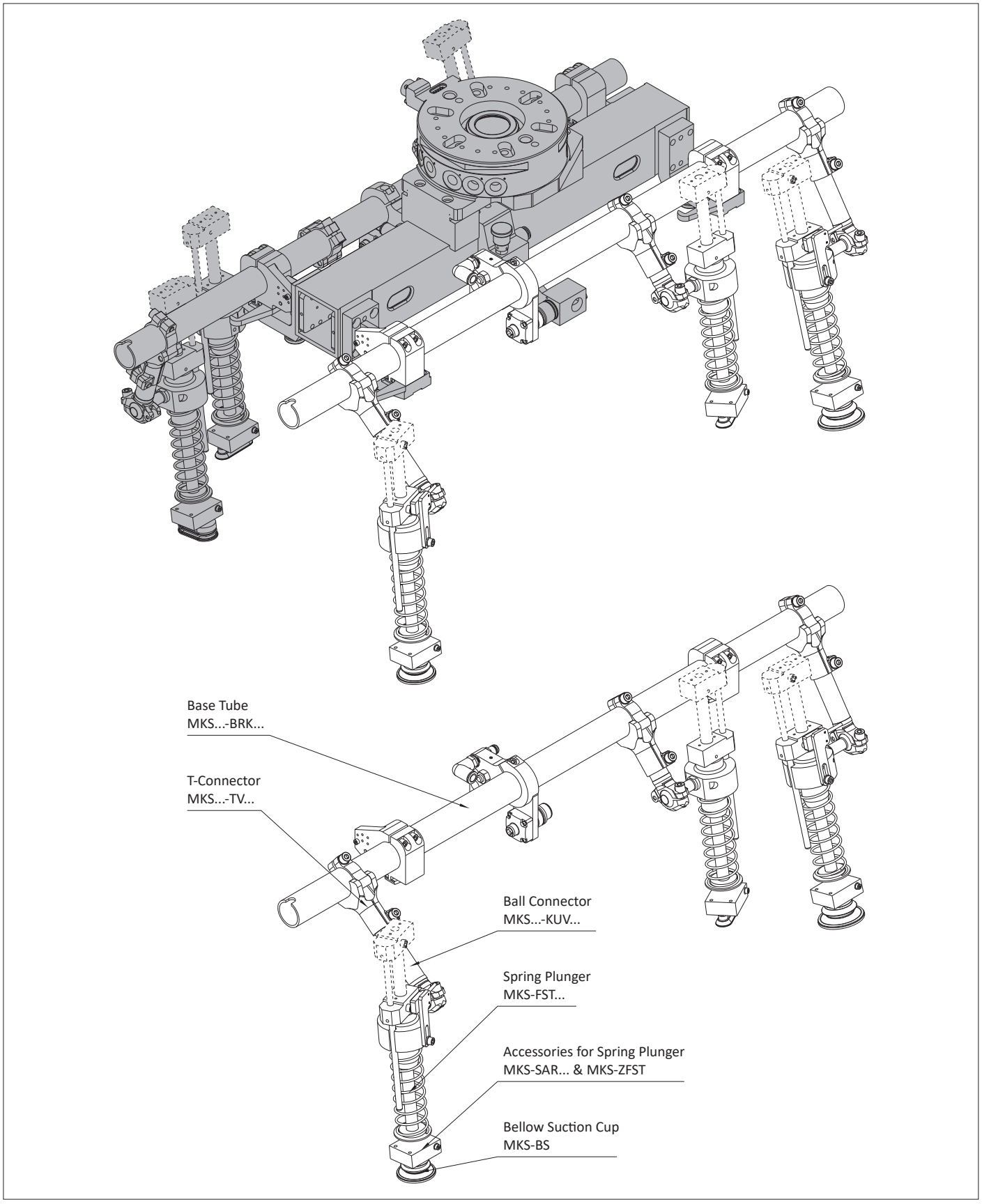

TMZ-Assembly - Tooling for Bayonet-Coupling with Spring Plungers

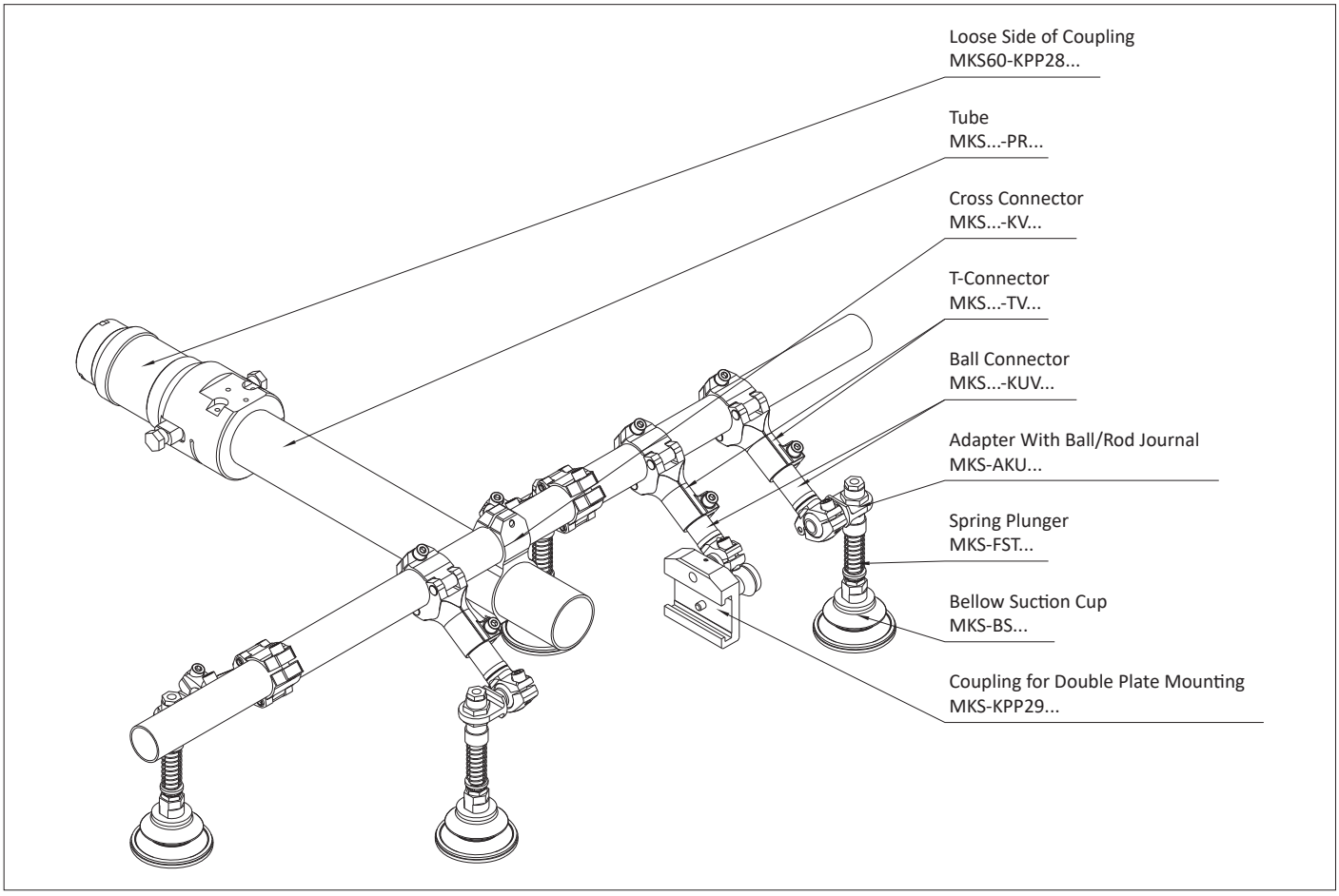

Quick-release coupling SKP for robot-press-tooling

Gripperarm without lead-throug opening
Tube Ø 60 mm, tube wall 3 mm
- MKS60-GRA20-XXXX (5x port)
- MKS60-GRA20-E-XXXX (5x port, E-plug 6 pin + ground)
- MKS60-GRA20-E2-XXXX (5x port, E-plug 18 pin + ground)

Article numbers and tube lengths on request!

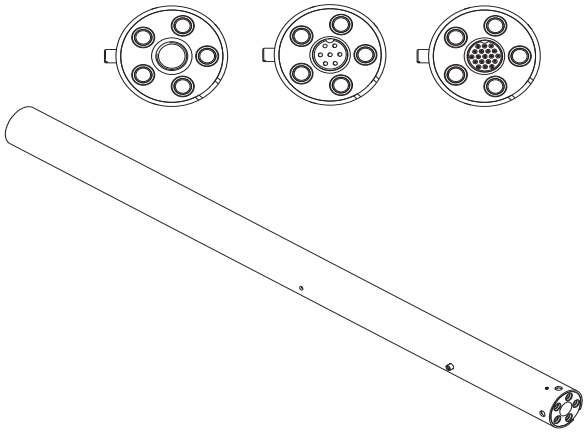

Gripperarm with lead-through opening
Tube Ø 60 mm, tube wall 2,5 mm
- MKS60-GRA05-XXXX (5x port)
- MKS60-GRA05-E-XXXX (5x port, E-plug 6 pin + ground)
- MKS60-GRA05-E2-XXXX (5x port, E-plug 18 pin + ground)

Tube Ø 60 mm, tube wall 3 mm
- MKS60-GRA05-EXXXX (5x port)
- MKS60-GRA05-E-EXXXX (5x port, E-plug 6 pin + ground)
- MKS60-GRA05-E2-EXXXX (5x port, E-plug 18 pin + ground)

Article numbers and tube lengths on request!

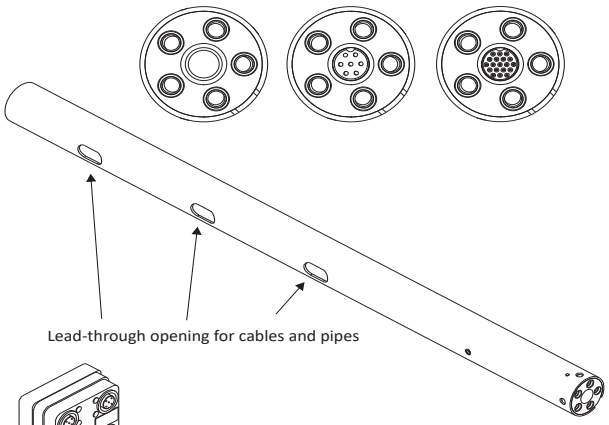

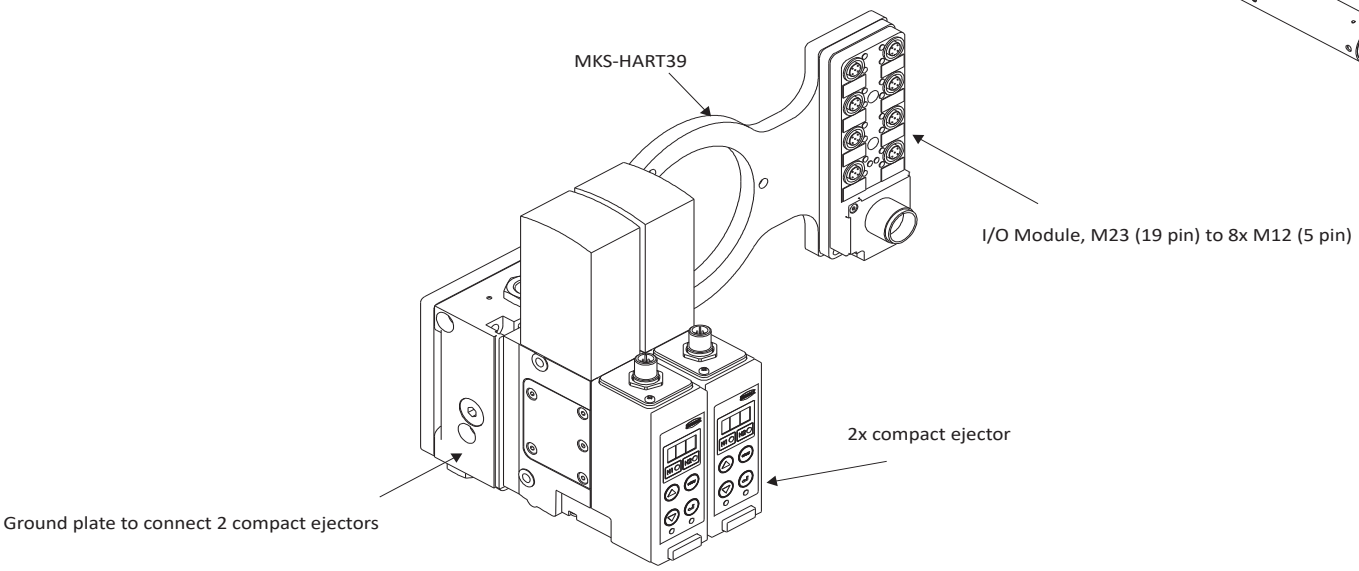

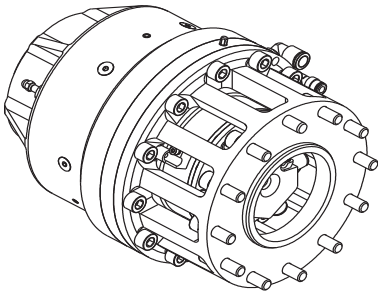

- MKS60-SKP01-2
  (5x pneumatic ports)

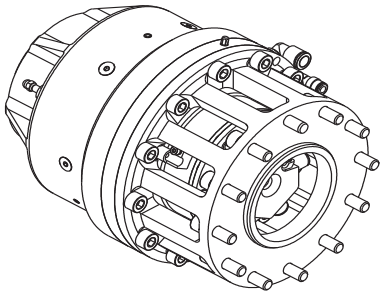

- MKS60-SKP01-2-E
  (5x pneu. ports, E-plug 6 pin + ground)

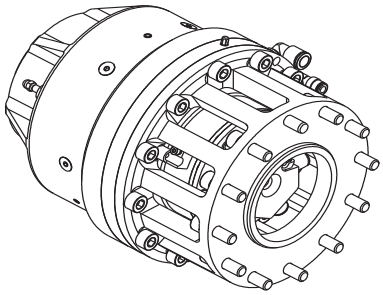

- MKS60-SKP01-2-E2
  (5x pneu. ports, E-plug 18 pin + ground)

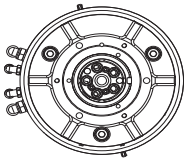

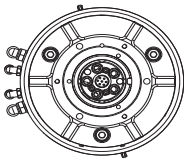

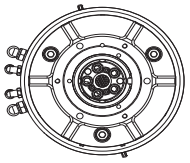

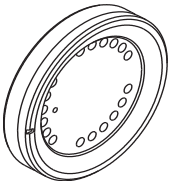

Article numbers on request

The illustrations are not to scale!

Adapter flange according to DIN/ISO 9409-1-A

2. Couplings and Change Rails

Index

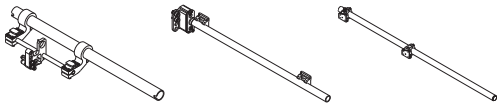

Base Tube 27

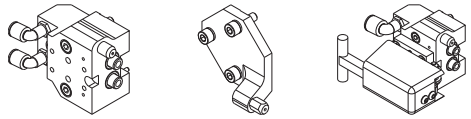

Accessories for Suction Cup Bar 39

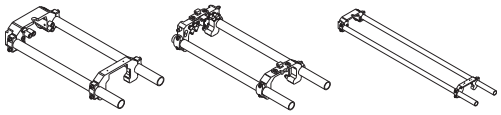

Carrying Frame 40

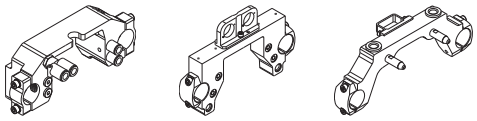

Carrying Frame Components (Tooling Bracket) 44

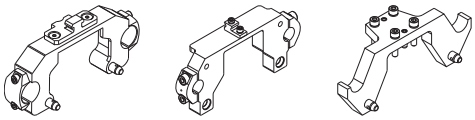

Carrying Frame Components (Counter Mounting) 47

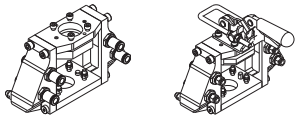

Coupling for Carrying Frame 48

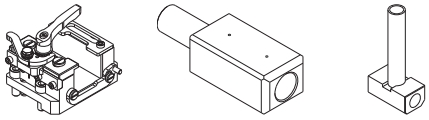

Tubular Coupling 49

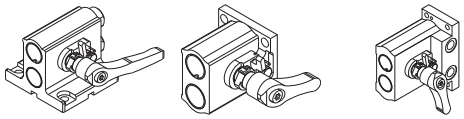

2-Channel-Coupling (fixed side) 55

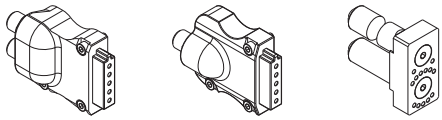

2-Channel-Coupling (accessories for fixed side) 57

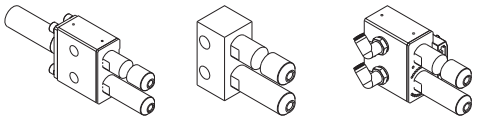

2-Channel-Coupling (loose side) 59

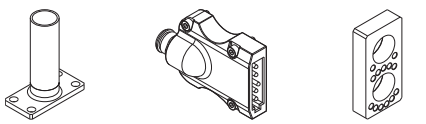

2-Channel-Coupling (accessories for loose side) 62

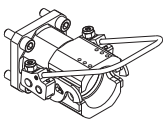

Bayonet Coupling (fixed side) 63

2. Couplings and Change Rails

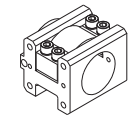
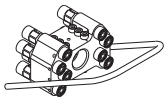
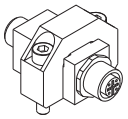

Bayonet Coupling (accessories for fixed side)..... 64

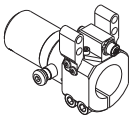
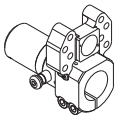
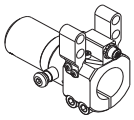

Bayonet Coupling (loose side)..... 65

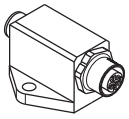

Bayonet Coupling (accessories for loose side)..... 67

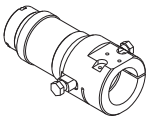
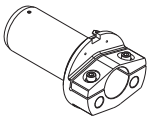
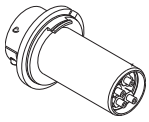

Loose Side of Coupling..... 68

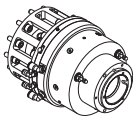

Robot Quick-Release Coupling (fixed side)..... 70



Robot Quick-Release Coupling (accessories for fixed side) 71

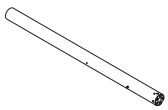
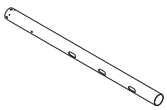
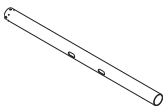

Robot Quick-Release Coupling (loose side) 72

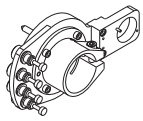
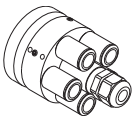

Robot Quick-Release Coupling (accessories for loose side)..... 74

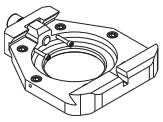
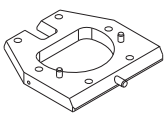

Robot Coupling (fixed and loose side)..... 75

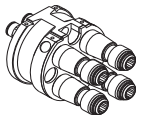
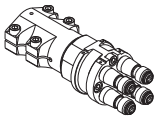


4-Channel-Coupling (loose side) 77

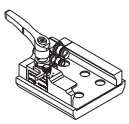
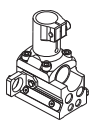

Coupling (MKSXX-KPP58-X fixed and loose side)..... 78

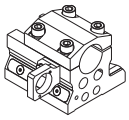
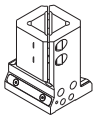

Coupling (MKSXX-KPP58-X loose side) 79

2. Couplings and Change Rails

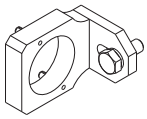
Coupling (MKS-KPP58-X accessories for loose side) 80

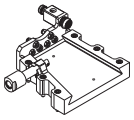
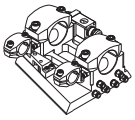
Coupling (MKSXX-KPP52-X fixed and loose side) 81


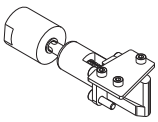
Coupling (MKS-KPP52-X accessories for fixed side) 82

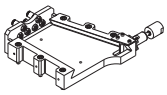
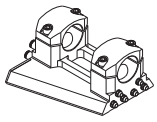
Coupling (MKSXX-KPP20-X fixed and loose side) 83

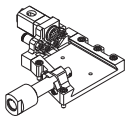
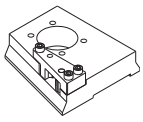
Coupling (MKS-KPP19-X fixed and loose side) 84

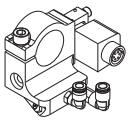
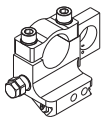
Coupling (MKS40-KPP41-X loose side) 85

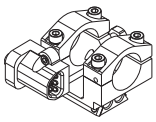
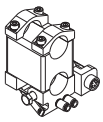
Coupling (MKS40-KPP38-X loose side) 86

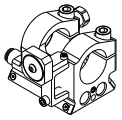
Coupling (MKS40-KPP46-X loose side) 87

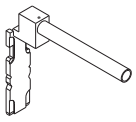
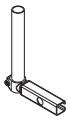
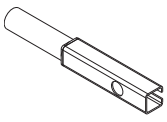
Loose Side of Coupling..... 88

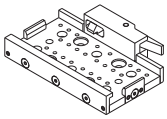
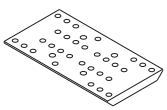
Coding Plate 89

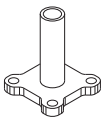
Accessories for Coding Plate 90

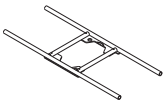
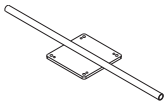
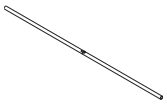
Parts Rack 91

Technical changes and errors are subject to change without notice!
www.springer.group
Document Date: CW 12.2025

2. Couplings and Change Rails

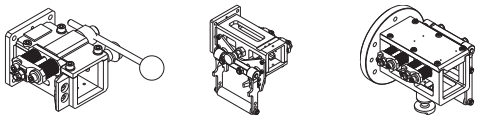
Robot Coupling for Square Tube (fixed side) 93

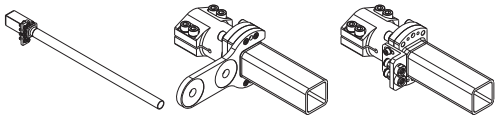
Robot Coupling for Square Tube (loose side)..... 94

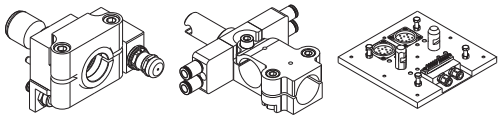
Loose Side of Coupling..... 95

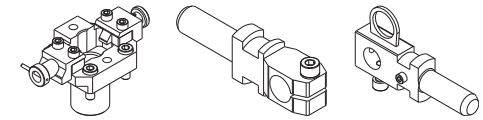
Coupling (MKS-KPP54-F fixed & MKS20-AK130-X loose side) 96

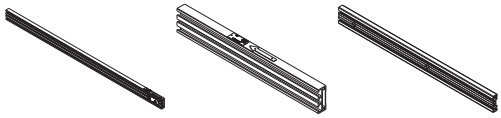
Gripper Rail 97

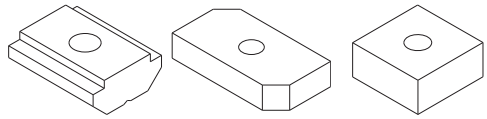
Slot Nut for Gripper Rail 98

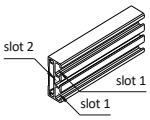

Compatibility: Slot Nuts and Gripper Rails 99

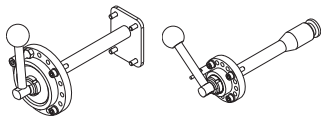
Locking Device for Gripper Rail 99

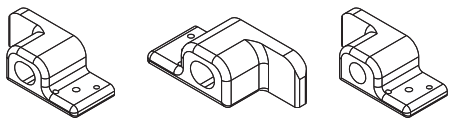
Seat for Gripper Rail 100

Base Tube

Description	Part No.
MKS40-BRK21-X-L-XXX	see table

Type: base tube, left

Material: material mix

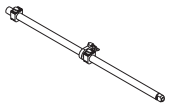

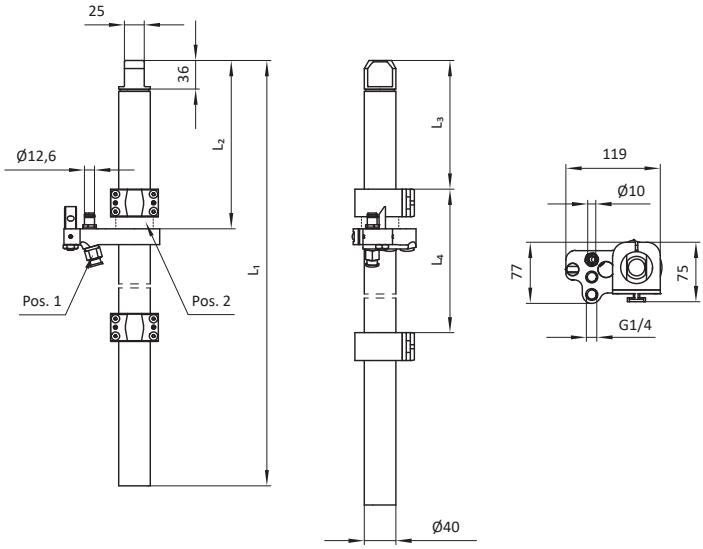

Part No.	Description	L_1 [mm]	L_2 [mm]	L_3 [mm]	L_4 [mm]	m [kg]	Port [Pos. 1]	Spacer [Pos. 2]
106584	MKS40-BRK21-L-970	970	212	162	591	2,60	Ø 10 mm (1x)	no
104407	MKS40-BRK21-1-L-1255	1255	628	578	591	2,19	Ø 12 mm (1x)	no
106638	MKS40-BRK21-1-L-970	970	212	162	591	2,60	Ø 12 mm (1x)	no
104529	MKS40-BRK21-2-L-1255	1255	628	578	591	2,57	without fittings	no
104117	MKS40-BRK21-L-1255	1255	628	578	591	2,60	Ø 10 mm (1x)	no
107773	MKS40-BRK21-L-1255-S1	1255	628	578	591	2,60	Ø 10 mm (1x)	yes

Description	Part No.
MKS40-BRK21-X-R-XXX	see table

Type: base tube, right

Material: material mix

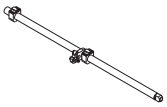

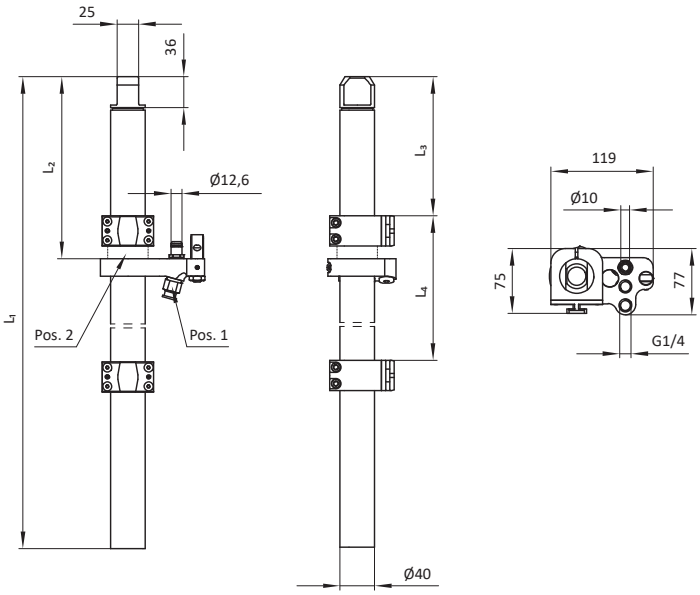

Part No.	Description	L_1 [mm]	L_2 [mm]	L_3 [mm]	L_4 [mm]	m [kg]	Port [Pos. 1]	Spacer [Pos. 2]
106585	MKS40-BRK21-R-970	970	212	162	591	2,57	Ø 10 mm (1x)	no
104408	MKS-BRK21-1-R-1255	1255	628	578	591	2,19	Ø 12 mm (1x)	no
106639	MKS40-BRK21-1-R-970	970	212	162	591	2,60	Ø 12 mm (1x)	no
104530	MKS40-BRK21-2-R-1255	1255	628	578	591	2,57	without fittings	no
104118	MKS40-BRK21-R-1255	1255	628	578	591	2,57	Ø 10 mm (1x)	no
107774	MKS40-BRK21-R-1255-S1	1255	628	578	591	2,60	Ø 10 mm (1x)	yes

Base Tube

Description	Part No.
MKS40-BR22-L-750	104125

Type: base tube, left

Material: material mix

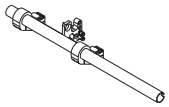

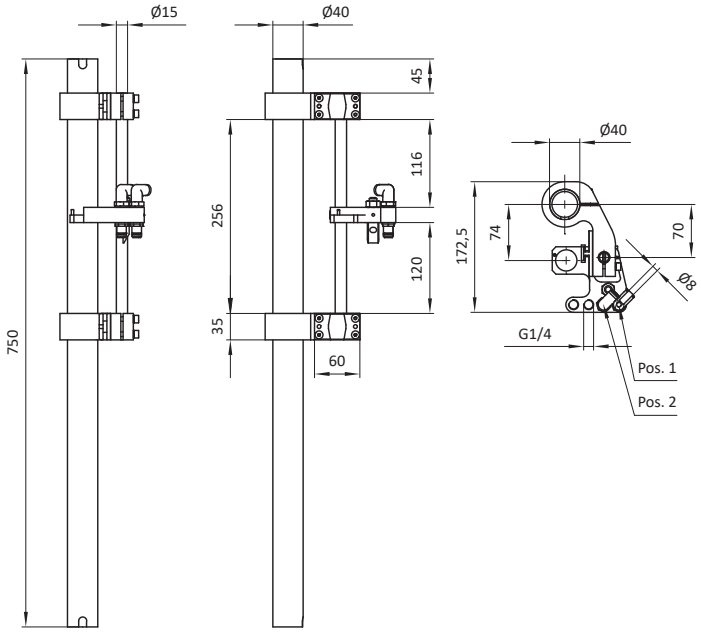

Part No.	Description	m [kg]	Compressed air [Pos. 1]	Vacuum [Pos. 2]
104125	MKS40-BRK22-L-750	2,48	Ø 8 mm (1x)	Ø 8 mm (1x)

Description	Part No.
MKS40-BR22-R-750	104126

Type: base tube, right

Material: material mix

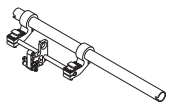

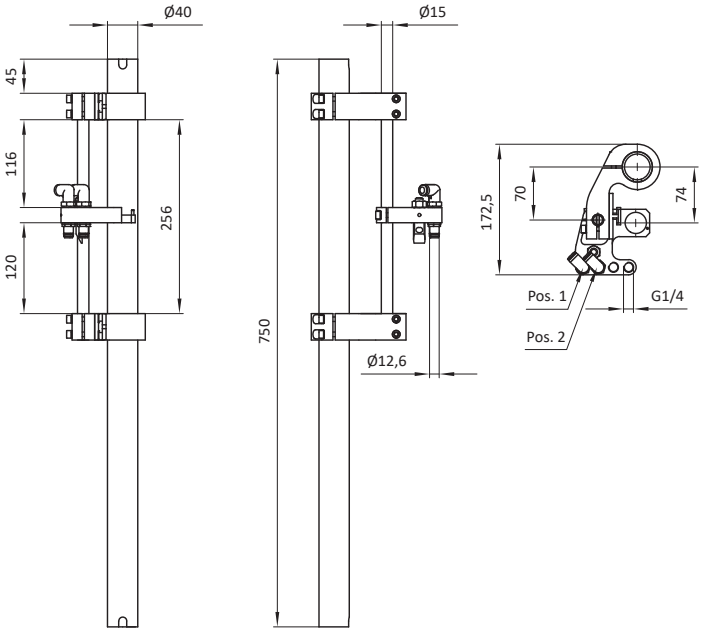

Part No.	Description	m [kg]	Compressed air [Pos. 1]	Vacuum [Pos. 2]
104126	MKS40-BRK22-R-750	2,48	Ø 8 mm (1x)	Ø 8 mm (1x)

Description	Part No.
MKS40-BRK23-L-1500	104862

Type: base tube, left

Material: material mix



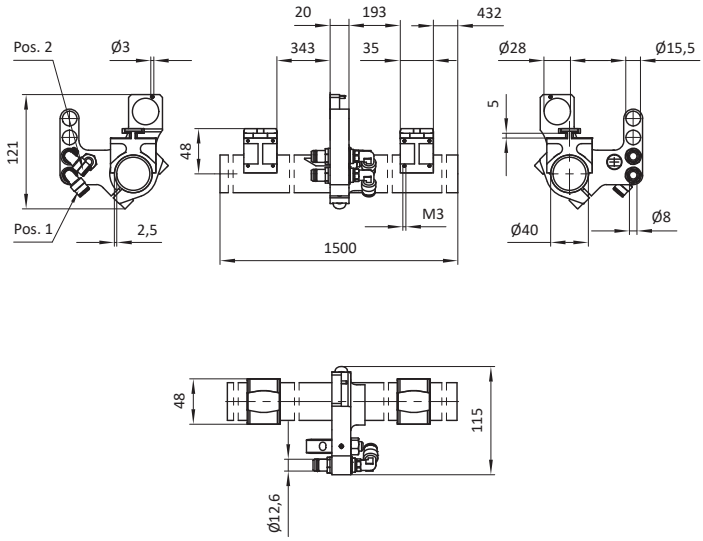

Part No.	Description	m [kg]	Compressed air [Pos. 1]	Vacuum [Pos. 2]
104862	MKS40-BRK23-L-1500	3,30	Ø 8 mm (1x)	Ø 8 mm (1x)

Description	Part No.
MKS40-BRK23-R-1500	104863

Type: base tube, right

Material: material mix



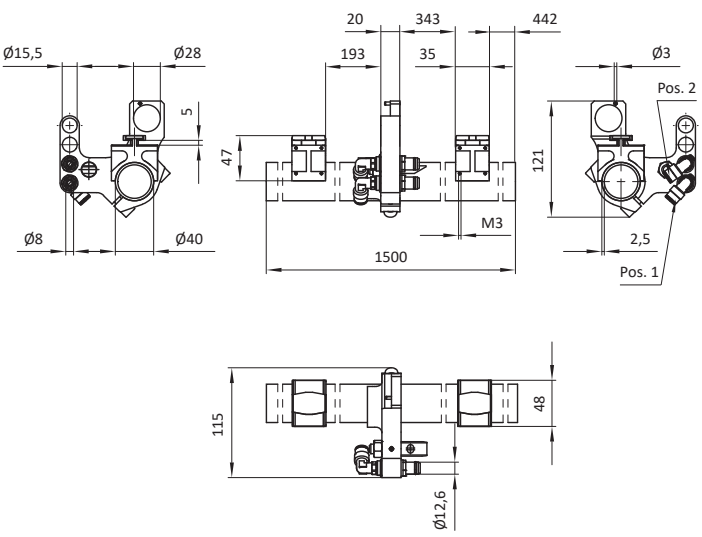

Part No.	Description	m [kg]	Compressed air [Pos. 1]	Vacuum [Pos. 2]
104863	MKS40-BRK23-R-1500	3,30	Ø 8 mm (1x)	Ø 8 mm (1x)

Base Tube

Description	Part No.
MKS40-BRKXX-L-XXX	see table

Type: base tube, left

Material: material mix

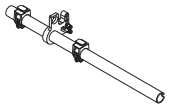

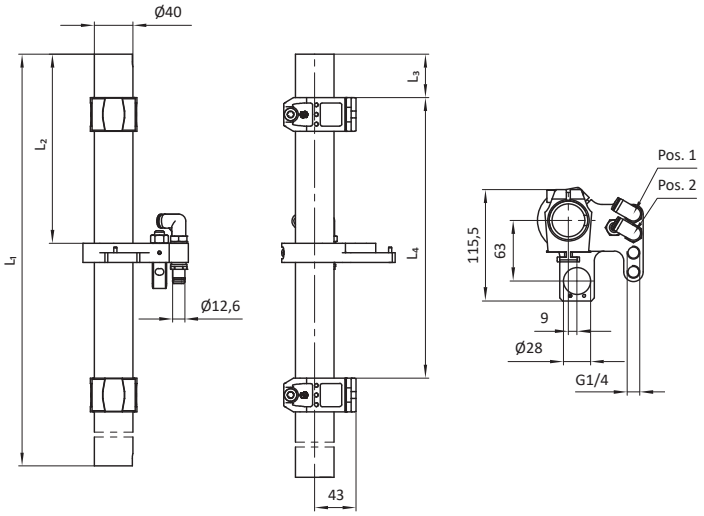

Part No.	Description	L_1 [mm]	L_2 [mm]	L_3 [mm]	L_4 [mm]	Compressed air [Pos. 1]	Vacuum [Pos. 2]
104249	MKS40-BRK24-L-750	750	196	45	291	Ø 8 mm (1x)	Ø 8 mm (1x)
101371	MKS40-BRK17-L-1150	1150	492	104	611	Ø 8 mm (1x)	Ø 8 mm (1x)
101373	MKS40-BRK18-L-1150	1150	273	45	591	Ø 8 mm (1x)	Ø 8 mm (1x)
101375	MKS40-BRK19-L-1135	1135	512	159	541	Ø 8 mm (1x)	Ø 8 mm (1x)
104251	MKS40-BRK25-L-750	750	335	55	440	Ø 8 mm (1x)	Ø 8 mm (1x)

Description	Part No.
MKS40-BRKXX-R-XXX	see table

Type: base tube, right

Material: material mix

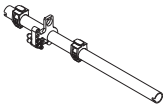

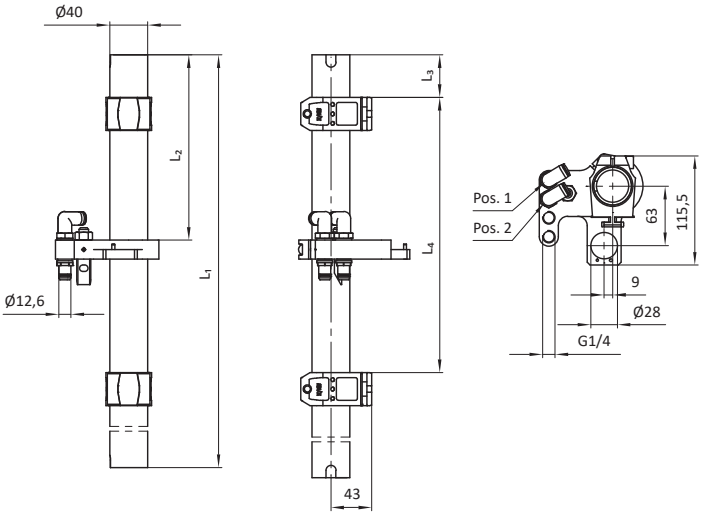

Part No.	Description	L_1 [mm]	L_2 [mm]	L_3 [mm]	L_4 [mm]	Compressed air [Pos. 1]	Vacuum [Pos. 2]
104250	MKS40-BRK24-R-750	750	196	45	291	Ø 8 mm (1x)	Ø 8 mm (1x)
101372	MKS40-BRK17-R-1150	1150	492	104	611	Ø 8 mm (1x)	Ø 8 mm (1x)
101374	MKS40-BRK18-R-1150	1150	273	45	591	Ø 8 mm (1x)	Ø 8 mm (1x)
101376	MKS40-BRK19-R-1135	1135	512	159	541	Ø 8 mm (1x)	Ø 8 mm (1x)
104252	MKS40-BRK25-R-750	750	335	55	440	Ø 8 mm (1x)	Ø 8 mm (1x)

Description	Part No.
MKS40-BRKXX-L-XXX	see table

Type: base tube, left

Material: material mix

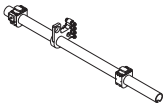

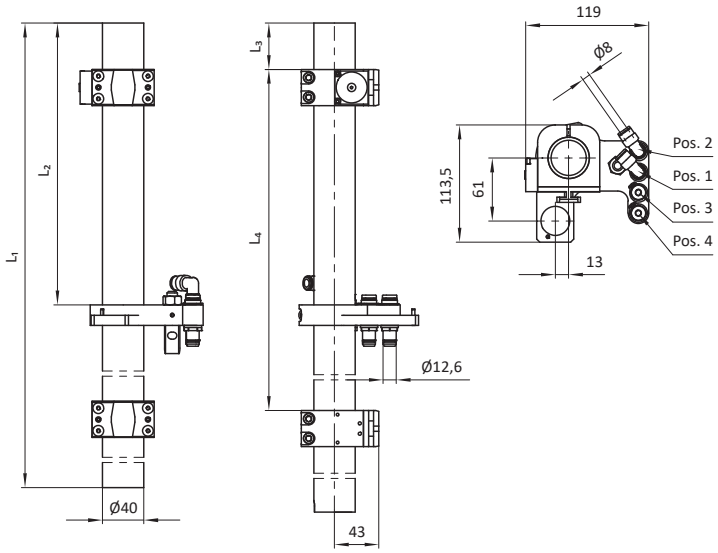

Part No.	Description	L_1 [mm]	L_2 [mm]	L_3 [mm]	L_4 [mm]	m [kg]	Compressed air [Pos. 1]	Vacuum [Pos. 2]	Compressed air [Pos. 3]	Vacuum [Pos. 4]
107601	MKS40-BRK31-L-850	850	273	45	591	2,63	Ø 8 mm (1x)	Ø 8 mm (1x)	without fittings	without fittings
105422	MKS40-BRK27-L-1200	1200	670	222	731	2,47	Ø 8 mm (1x)	Ø 8 mm (1x)	Ø 10 mm (1x)	Ø 10 mm (1x)
105262	MKS40-BRK27-L-1600	1600	870	422	731	2,85	Ø 8 mm (1x)	Ø 8 mm (1x)	Ø 10 mm (1x)	Ø 10 mm (1x)
107624	MKS40-BRK23-L-3000	3000	1480	178	165	6,80	Ø 8 mm (1x)	Ø 8 mm (1x)	without fittings	without fittings
106634	MKS40-BRK32-L-1200	1200	475	203	490	2,56	Ø 8 mm (1x)	Ø 8 mm (1x)	Ø 10 mm (1x)	Ø 10 mm (1x)

Base Tube

Description	Part No.
MKS40-BRK25-XXX	see table

Type: base tube, ahead

Material: material mix

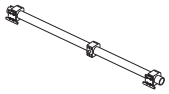

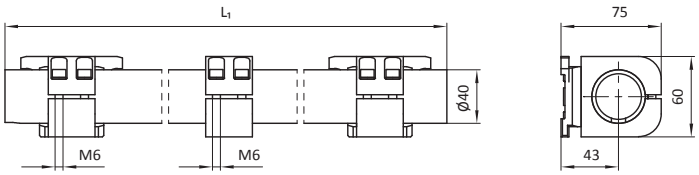

Part No.	Description	L_1 [mm]	m [kg]
107582	MKS40-BR25-1000-V	1000	2,00
107583	MKS40-BR25-2350-V	2350	3,40

Description	Part No.
MKS40-BRK2X-XXXX	see table

Type: base tube with power coupling

Material: material mix

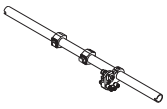

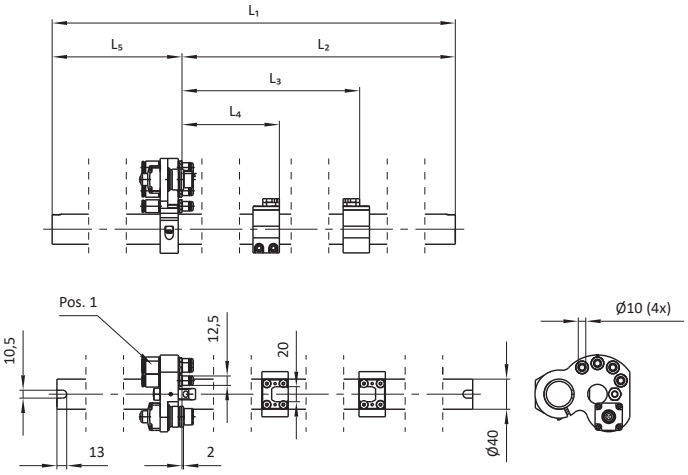

Part No.	Description	L_1 [mm]	L_2 [mm]	L_3 [mm]	L_4 [mm]	L_5 [mm]	m [kg]	Port [Pos. 1]
105944	MKS40-BRK28-800	800	657,5	370,5	194,5	142,5	1,25	Ø 10 mm (4x)
106351	MKS40-BRK28-1000	1000	707,5	370,5	194,5	292,5	2,15	Ø 10 mm (4x)
106350	MKS40-BRK26-1000	1000	697,5	327	181	302,5	2,02	Ø 10 mm (4x)

Description	Part No.
MKS40-BRXX-XXX	see table

Type: base tube

Material: material mix

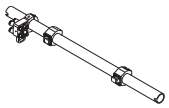

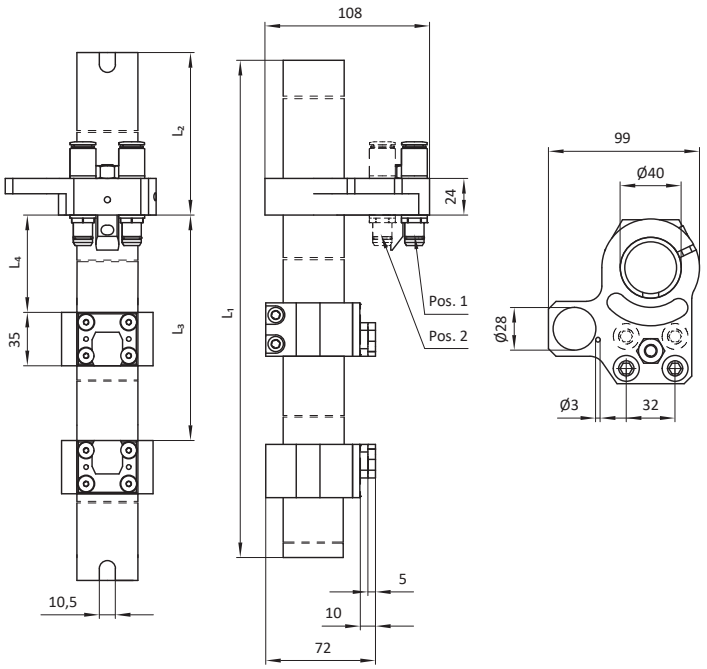

Part No.	Description	L_1 [mm]	L_2 [mm]	L_3 [mm]	L_4 [mm]	m [kg]	Port [Pos. 1]	Port [Pos. 2]
106352	MKS40-BRK29-1000	1000	322,5	124	324	2,00	Ø 10 mm (2x)	without fittings
106048	MKS40-BRK29-800	800	172,5	124	324	1,92	Ø 10 mm (2x)	Ø 10 mm (2x)
106353	MKS40-BRK30-1000	1000	270	93	461	2,00	Ø 10 mm (2x)	without fittings
106049	MKS40-BRK30-800	800	120	93	461	1,92	Ø 10 mm (2x)	Ø 10 mm (2x)

Base Tube

Description	Part No.
MKS40-BRK3X-L-XXXX-X	see table

Type: base tube with coding, left

Material: material mix

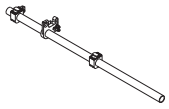

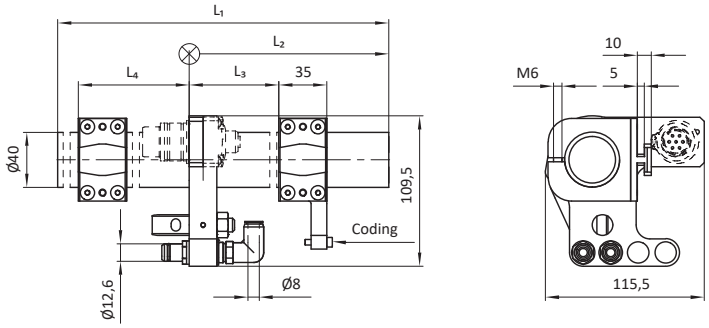

Part No.	Description	L_1 [mm]	L_2 [mm]	L_3 [mm]	L_4 [mm]	m [kg]	Compressed air [Pos. 1]	Vacuum [Pos. 2]
107041	MKS40-BRK33-L-1150	1150	293	213	378	2,25	Ø 8 mm (1x)	Ø 8 mm (1x)
107138	MKS40-BRK33-L-1150-1	1150	293	213	378	2,20	Ø 10 mm (1x)	without fittings
107595	MKS40-BRK33-L-1800-3	1800	1434	213	804 position acc. to coding	2,52	Ø 10 mm (1x)	without fittings
107599	MKS40-BRK31-L-850-1	850	293	213	378	2,25	Ø 8 mm (1x)	Ø 8 mm (1x)
107378	MKS40-BRK33-L-1500-1	1500	453	193 coding left	363 position right	2,55	Ø 10 mm (1x)	without fittings
107579	MKS40-BRK33-L-3000	3000	1500	213	378	4,07	Ø 10 mm (1x)	without fittings

Description	Part No.
MKS40-BRKXX-R-XXX	see table

Type: base tube, right

Material: material mix

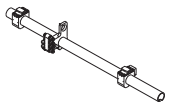

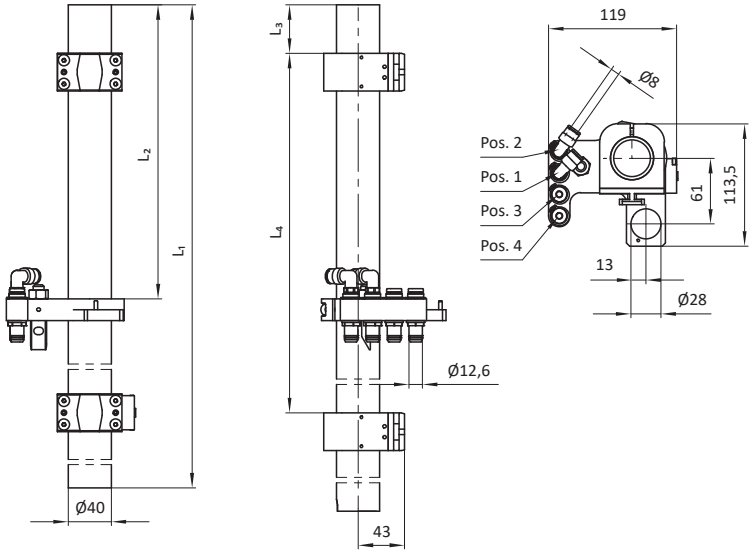

Part No.	Description	L_1 [mm]	L_2 [mm]	L_3 [mm]	L_4 [mm]	m [kg]	Compressed air [Pos. 1]	Vacuum [Pos. 2]	Compressed air [Pos. 3]	Vacuum [Pos. 4]
107602	MKS40-BRK31-R-850	850	273	45	591	2,63	Ø 8 mm (1x)	Ø 8 mm (1x)	without fittings	without fittings
105423	MKS40-BRK27-R-1200	1200	670	222	731	2,47	Ø 8 mm (1x)	Ø 8 mm (1x)	Ø 10 mm (1x)	Ø 10 mm (1x)
105263	MKS40-BRK27-R-1600	1600	870	422	731	2,85	Ø 8 mm (1x)	Ø 8 mm (1x)	Ø 10 mm (1x)	Ø 10 mm (1x)
107625	MKS40-BRK23-R-3000	3000	1480	178	165	6,80	Ø 8 mm (1x)	Ø 8 mm (1x)	without fittings	without fittings
106635	MKS40-BRK32-R-1200	1200	475	203	490	2,56	Ø 8 mm (1x)	Ø 8 mm (1x)	Ø 10 mm (1x)	Ø 10 mm (1x)

Base Tube

Description	Part No.
MKS40-BRK3X-R-XXXX-X	see table

Type: base tube with coding, right

Material: material mix

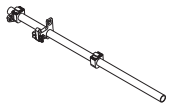

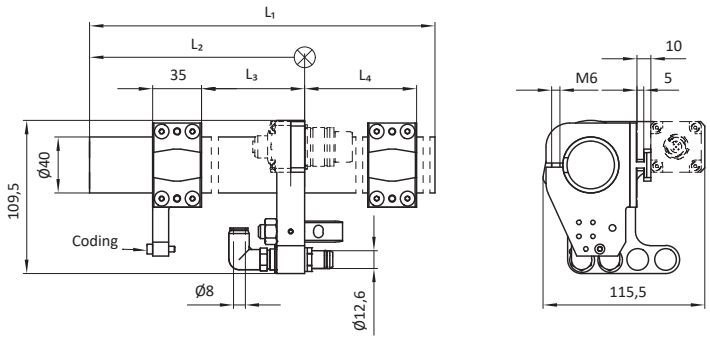

Part No.	Description	L_1 [mm]	L_2 [mm]	L_3 [mm]	L_4 [mm]	m [kg]	Compressed air [Pos. 1]	Vacuum [Pos. 2]
107042	MKS40-BRK33-R-1150	1150	293	213	378	2,25	Ø 8 mm (1x)	Ø 8 mm (1x)
107139	MKS40-BRK33-R-1150-1	1150	293	213	378	2,20	Ø 10 mm (1x)	without fittings
107596	MKS40-BRK33-R-1800-3	1800	1434	213	804 Position acc. to coding	2,53	Ø 10 mm (1x)	without fittings
107600	MKS40-BRK31-R-850-1	850	293	213	378	2,19	Ø 8 mm (1x)	Ø 8 mm (1x)
107388	MKS40-BRK33-R-1500-2	1500	680	213	378	2,55	Ø 10 mm (1x)	without fittings
107580	MKS40-BRK33-R-3000	3000	1500	213	378	4,07	Ø 10 mm (1x)	without fittings

Description	Part No.
MKS25-BRXX-L-XX	see table

Type: base tube, left

Material: steel



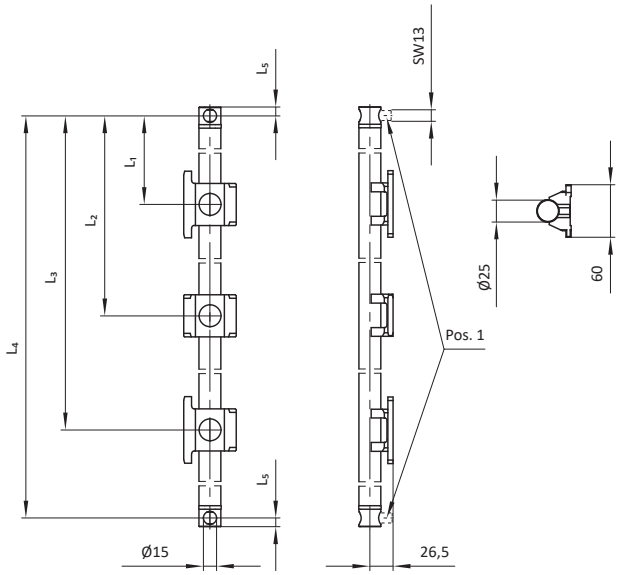

Part No.	Description	L_1 [mm]	L_2 [mm]	L_3 [mm]	L_4 [mm]	L_5 [mm]	m [kg]	Pin [Pos. 1]
10519	MKS25-BR01-L	171	675	1151	1370	10	2,70	yes
106975	MKS25-BR02-L-S1	158,5	662,5	1138,5	1380	-	2,70	no

Description	Part No.
MKS25-BRXX-R-XX	see table

Type: base tube, right

Material: steel

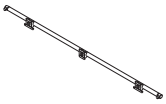

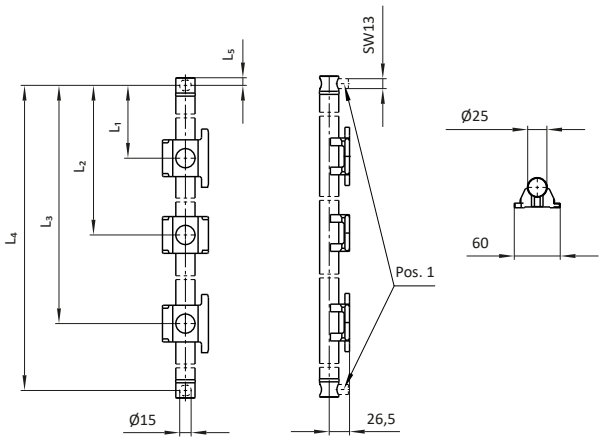

Part No.	Description	L_1 [mm]	L_2 [mm]	L_3 [mm]	L_4 [mm]	L_5 [mm]	m [kg]	Pin [Pos. 1]
10518	MKS25-BR01-R	171	675	1151	1370	10	2,70	yes
106976	MKS25-BR02-R-S1	158,5	662,5	1138,5	1380	-	2,52	no

Base Tube

Description	Part No.
MKS25-BR01-R/X-X	see table

Type: base tube, right

Material: material mix



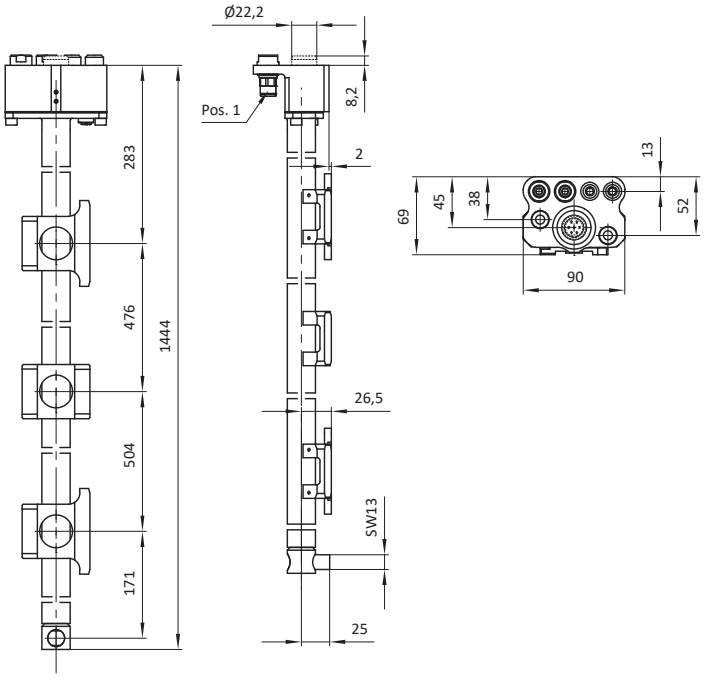

Part No.	Description	m [kg]	Port [Pos. 1]	Connector
11602	MKS25-BRK01-R/E	3,29	Ø 8 mm (2x), metal fitting	right
15596	MKS25-BRK01-R/E-1	3,29	Ø 8 mm (2x), composite fitting	right
11601	MKS25-BRK01-R	3,20	Ø 8 mm (2x), metal fitting	without
15594	MKS25-BRK01-R-1	3,17	Ø 8 mm (2x), composite fitting	without

Description	Part No.
MKS25-BRK01-L/X-X	see table

Type: base tube, left

Material: material mix



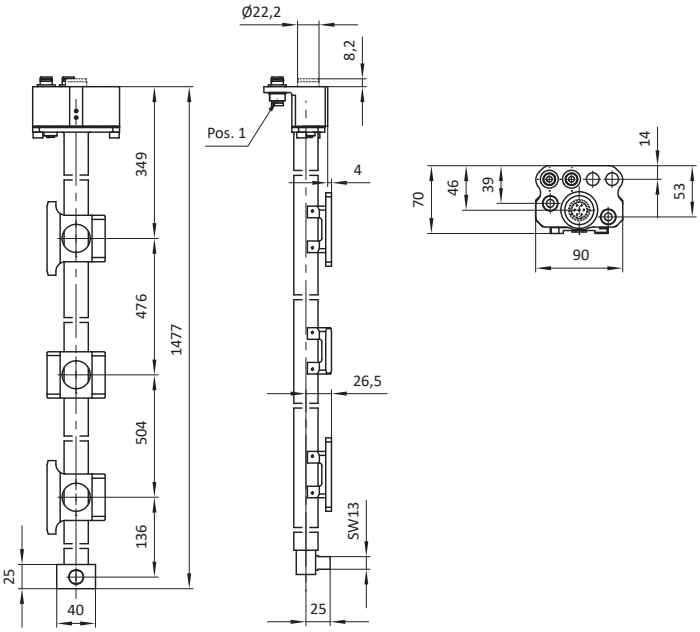

Part No.	Description	m [kg]	Port [Pos. 1]	Connector
11600	MKS25-BRK01-L/E	3,29	Ø 8 mm (2x), metal fitting	left
15595	MKS25-BRK01-L/E-1	3,29	Ø 8 mm (2x), composite fitting	left
11599	MKS25-BRK01-L	3,20	Ø 8 mm (2x), metal fitting	without
15593	MKS25-BRK01-L-1	3,17	Ø 8 mm (2x), composite fitting	without

Description	Part No.
MKS25-BR02-L	14511

Type: base tube, left

Material: steel

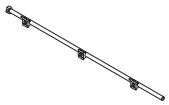

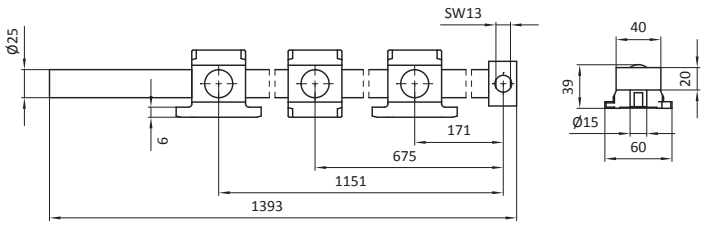

Part No.	Description	m [kg]
14511	MKS25-BR02-L	2,65

Description	Part No.
MKS25-BR02-R	14510

Type: base tube, right

Material: steel

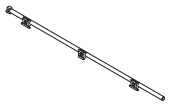

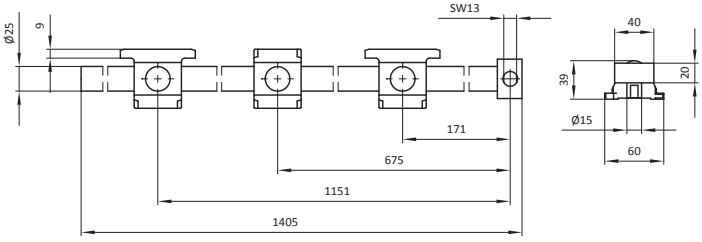

Part No.	Description	m [kg]
14510	MKS25-BR02-R	2,65

Base Tube

Description	Part No.
MKS30-BRK15-L-OP/OE	103171

Type: base tube with coupling-block, left

Material: steel



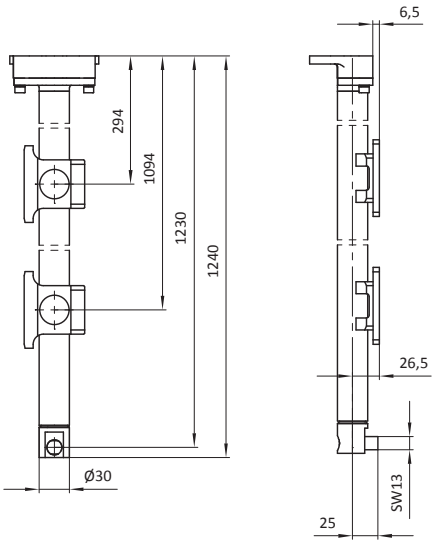

Part No.	Description	m [kg]
103171	MKS30-BRK15-L-OP/OE	2,30

Description	Part No.
MKS30-BRK15-R-OP/OE	103172

Type: base tube with coupling-block, right

Material: steel



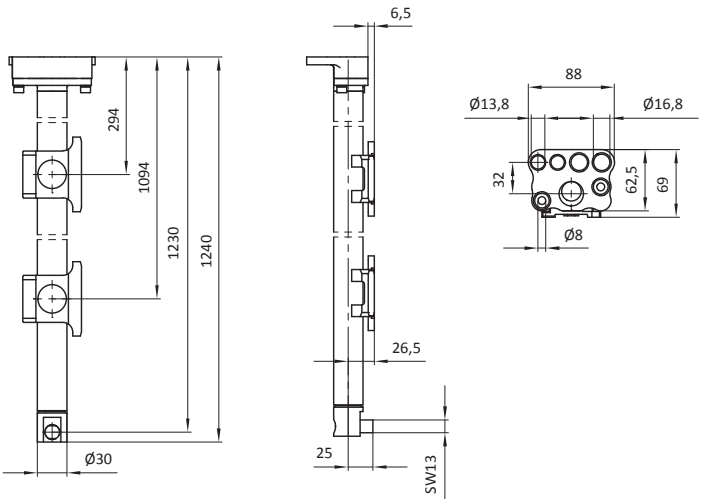

Part No.	Description	m [kg]
103172	MKS30-BRK15-R-OP/OE	2,30

Description	Part No.
MKS25-BRK02-R/X-X	see table

Type: base tube, right

Material: material mix

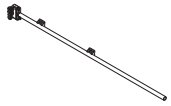

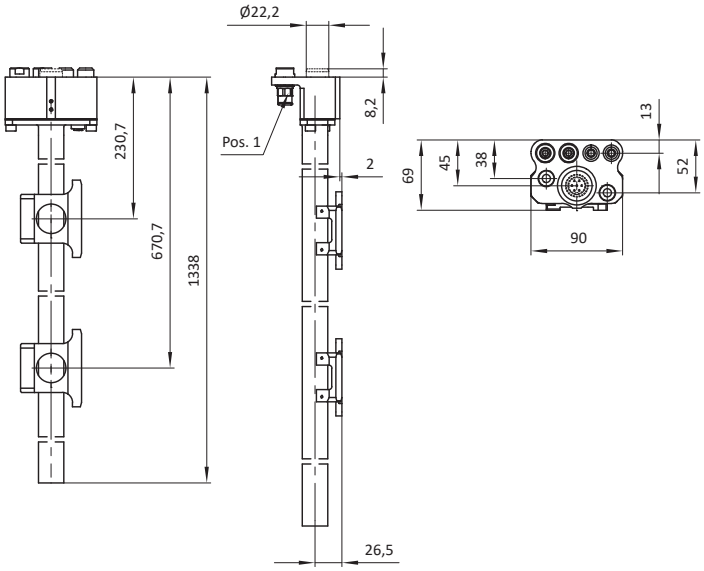

Part No.	Description	m [kg]	Connector	Port [Pos. 1]
10521	MKS25-BRK02-R	2,75	without	Ø 8 mm (2x), metal fitting
11604	MKS25-BRK02-R/E	2,83	right	Ø 8 mm (2x), metal fitting
15600	MKS25-BRK02-R/E-1	2,83	right	Ø 8 mm (2x), composite fitting

Base Tube

Description	Part No.
MKS25-BRK07-R/X	see table

Type: base tube, right

Material: material mix



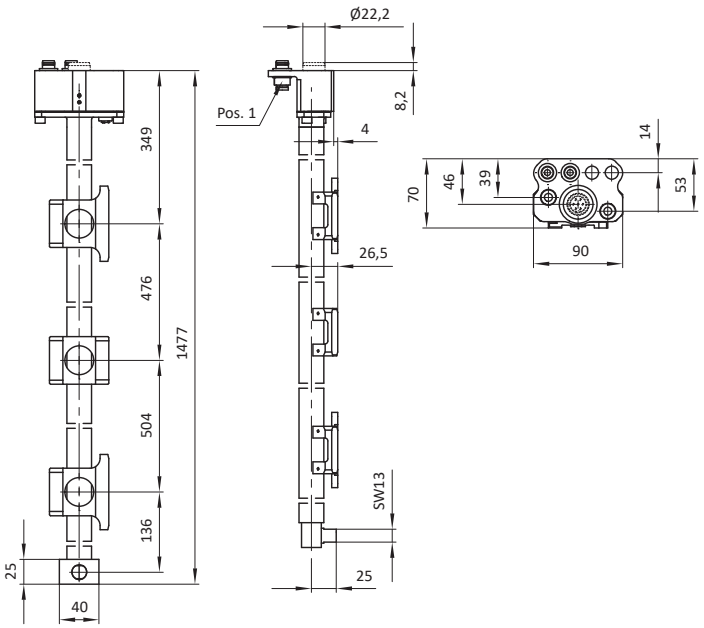

Part No.	Description	m [kg]	Connector	Port [Pos. 1]
15723	MKS25-BRK07-R/E	3,42	right	MKS-KPP24 (2x)
14512	MKS25-BRK07-R	3,34	without	MKS-KPP24 (2x)

Description	Part No.
MKS25-BRK0X-L/X	see table

Type: base tube left

Material: material mix

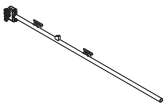

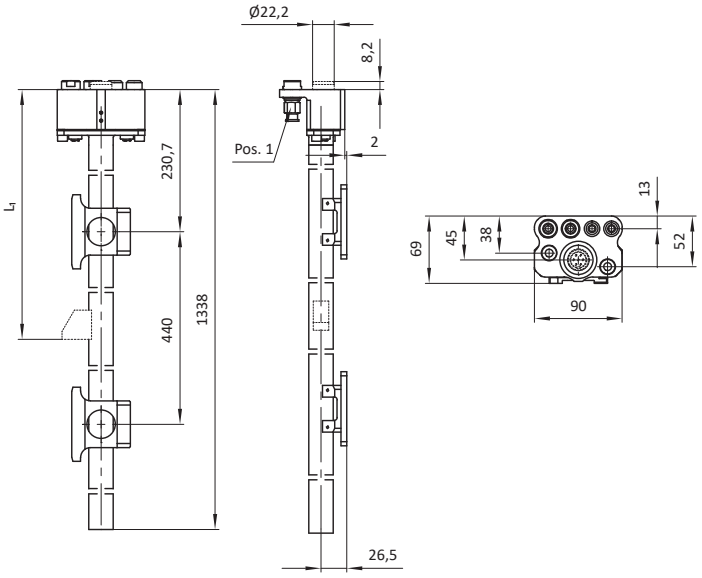

Part No.	Description	L_1 mm	m [kg]	Connector	Port [Pos. 1]
12641	MKS25-BRK03-L/E-1	440	3,27	left	Ø 8 mm (2x), composite fitting
10520	MKS25-BRK02-L	without	2,75	without	Ø 8 mm (2x), metal fitting
11603	MKS25-BRK02-L/E	without	2,83	left	Ø 8 mm (2x), metal fitting
15599	MKS25-BRK02-L/E-1	without	2,83	left	Ø 8 mm (2x), composite fitting

Description	Part No.
MKS25-BRK08-L/X	see table

Type: base tube, left

Material: material mix

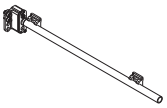

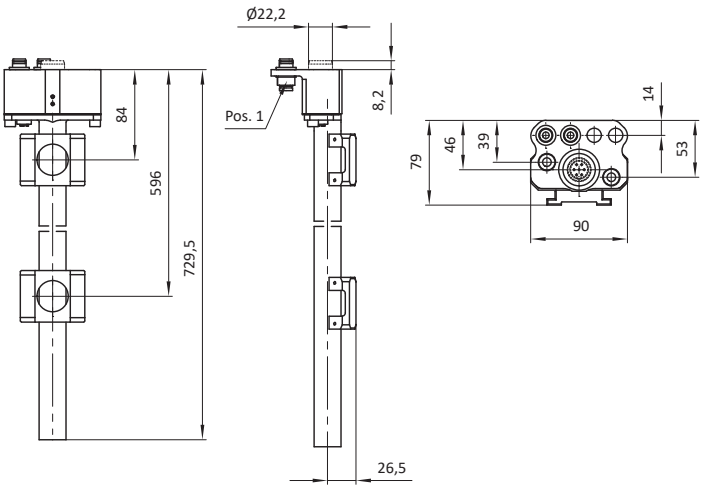

Part No.	Description	m [kg]	Connector	Port [Pos. 1]
15725	MKS25-BRK08-L/E	1,90	left	MKS-KPP24 (2x)
14514	MKS25-BRK08-L	1,88	without	MKS-KPP24 (2x)

Description	Part No.
MKS25-BR08-R/X	see table

Type: base tube, right

Material: material mix

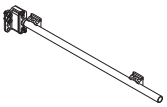

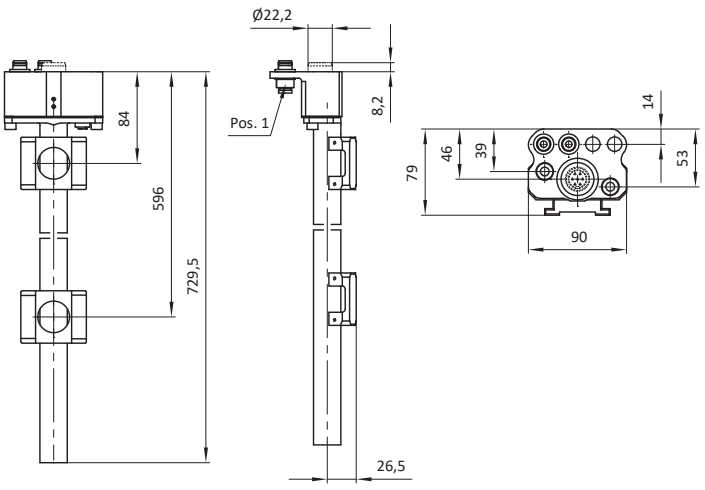

Part No.	Description	m [kg]	Connector	Port [Pos. 1]
15726	MKS25-BRK08-R/E	1,90	right	MKS-KPP24 (2x)
14515	MKS25-BRK08-R	1,88	without	MKS-KPP24 (2x)

Base Tube

Description	Part No.
MKS25-BRK09-L/X-1	see table

Type: base tube with plug-in nipple, left

Material: material mix



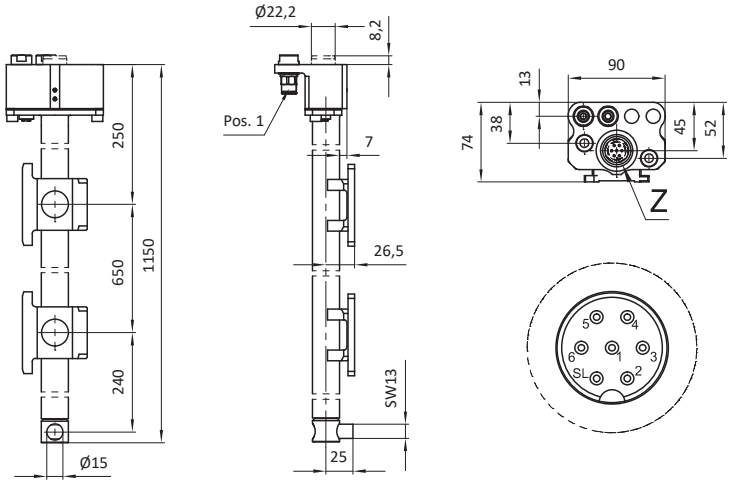

Part No.	Description	Connector	SL green/yellow	Pin 1 blue	Pin 3 brown	Pin 4 black	m [mm]	Port [Pos. 1]
15310	MKS25-BRK09-L/E-1	yes	ground wire	negative	positive	output	3,60	Ø 8 mm (2x), metal fitting
15677	MKS25-BRK09-L-1	no	-	-	-	-	3,60	Ø 8 mm (2x), composite fitting

Description	Part No.
MKS25-BRK09-R/X-1	see table

Type: base tube with plug-in nipple, right

Material: material mix



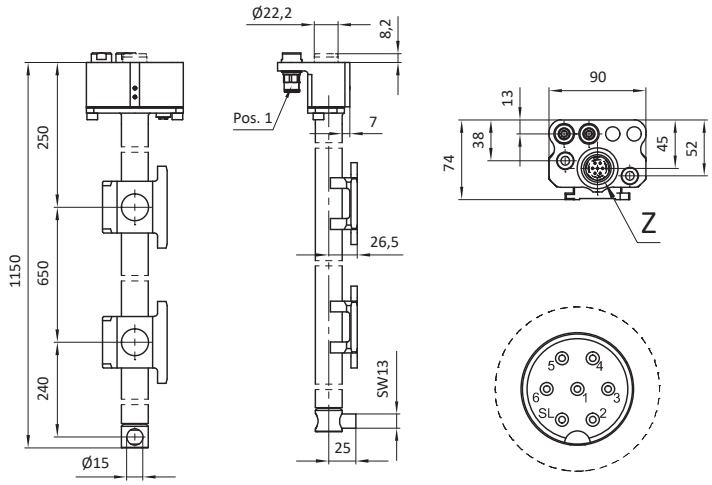

Part No.	Description	Connector	SL green/yellow	Pin 1 blue	Pin 3 brown	Pin 4 black	m [kg]	Port [Pos. 1]
15311	MKS25-BRK09-R/E-1	yes	ground wire	negative	positive	output	3,60	Ø 8 mm (2x), metal fitting
15678	MKS25-BRK09-R-1	no	-	-	-	-	3,60	Ø 8 mm (2x), composite fitting

Base Tube

Description	Part No.
MKS40-BRK1X-L-XXX-XXX	see table

Type: base tube, left

Material: material mix

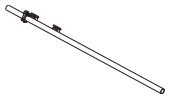

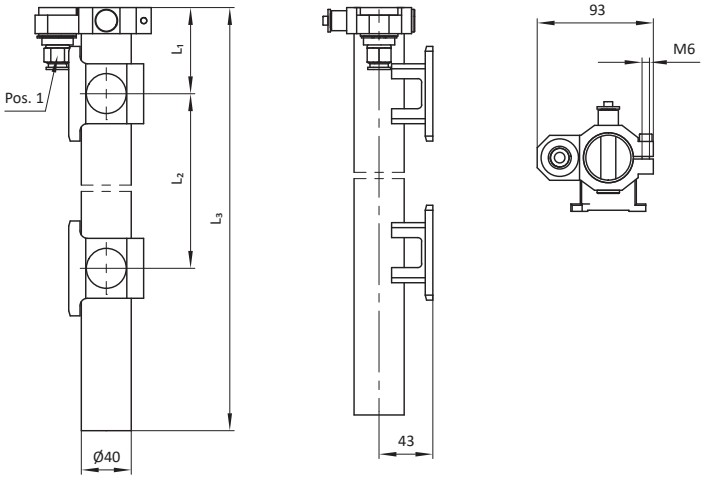

Part No.	Description	L_1 [mm]	L_2 [mm]	L_3 [mm]	Port [Pos. 1]
106262	MKS40-BRK13-L-862-1061	69	862	1061	Ø 10 mm (1x)
17775	MKS40-BRK13-L-1100	69,5	1100	1250,5	Ø 8 mm (1x)
17788	MKS40-BRK13-L-1142	69	1142	1511	Ø 10 mm (1x)
103863	MKS40-BRK13-L-230	243	230	1598	Ø 10 mm (1x)
106264	MKS40-BRK13-L-230-1098	243	230	1098	Ø 10 mm (1x)
106260	MKS40-BRK13-L-562-841	69	562	841	Ø 10 mm (1x)
100851	MKS40-BRK13-L-862	69	862	1511	Ø 10 mm (1x)
17793	MKS40-BRK14-L-1142	69	1142	1511	without fittings

Description	Part No.
MKS40-BRK1X-R-XXX-XXX	see table

Type: base tube, right

Material: material mix

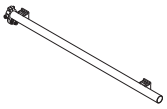

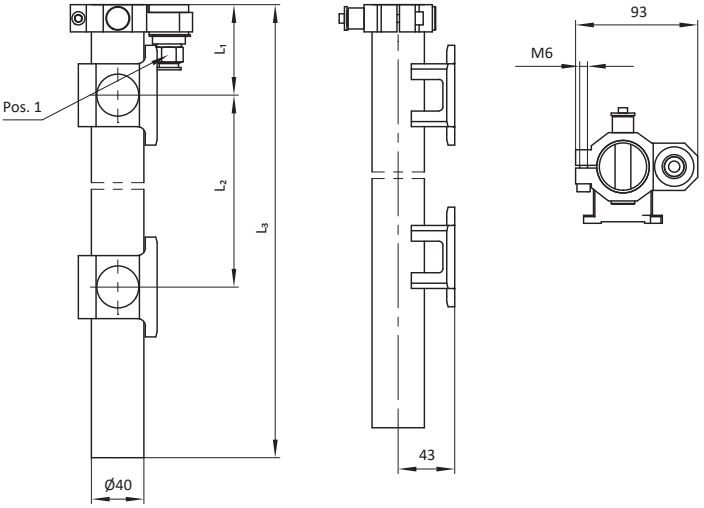

Part No.	Description	L_1 [mm]	L_2 [mm]	L_3 [mm]	Port [Pos. 1]
106261	MKS40-BRK13-R-862-1061	69	862	1061	Ø 10 mm (1x)
17774	MKS40-BRK13-R-1100	69,5	1100	1250,5	Ø 8 mm (1x)
17787	MKS40-BRK13-R-1142	69	1142	1511	Ø 10 mm (1x)
103862	MKS40-BRK13-R-230	234	230	1598	Ø 10 mm (1x)
106263	MKS40-BRK13-R-230-1098	243	230	1098	Ø 10 mm (1x)
106259	MKS40-BRK13-R-562-841	69	562	841	Ø 10 mm (1x)
100850	MKS40-BRK13-R-862	69	862	1511	Ø 10 mm (1x)
17792	MKS40-BRK14-R-1142	69	1142	1511	without fittings

Description	Part No.
MKS40-BR24-L-1400	107275

Type: base tube, left

Material: material mix

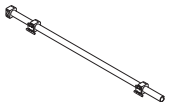

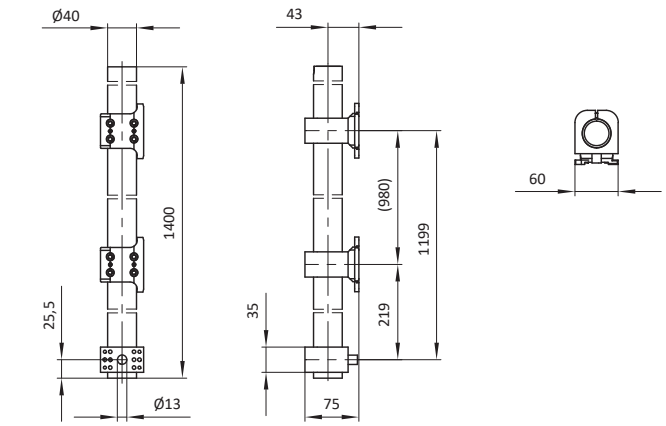

Part No.	Description	m [kg]
107275	MKS40-BR24-L-1400	2,40

Description	Part No.
MKS40-BR24-R-1400	107276

Type: base tube, right

Material: material mix

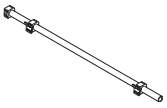

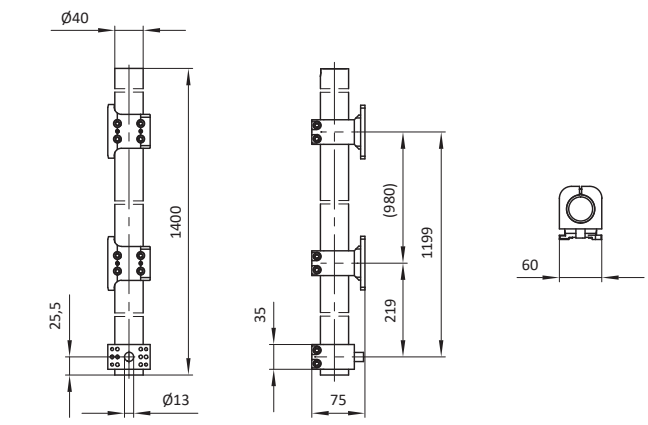

Part No.	Description	m [kg]
107276	MKS40-BR24-R-1400	2,40

Base Tube

Description	Part No.
MKS40-BRK11-R-5-XXXX	see table

Type: base tube with 5-fold coupling, right

Material: material mix

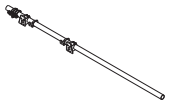

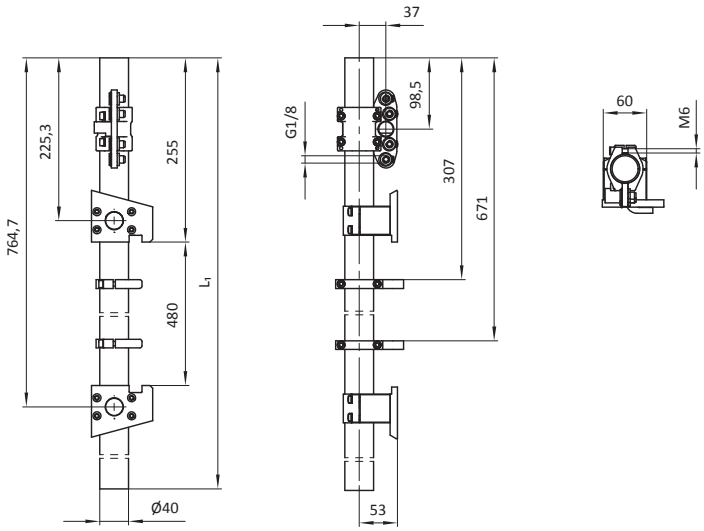

Part No.	Description	L_1 [mm]
16736	MKS40-BRK11-R-5-1800	1800
16735	MKS40-BRK11-R-5-1500	1500
16734	MKS40-BRK11-R-5-1200	1200
16733	MKS40-BRK11-R-5-900	900

Description	Part No.
MKS40-BRK11-L-5-XXXX	see table

Type: base tube with 5-fold coupling, left

Material: material mix

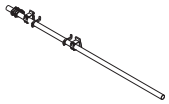

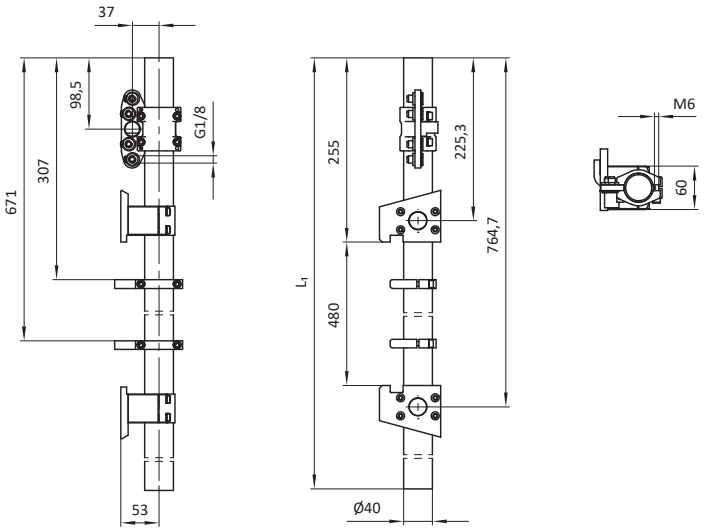

Part No.	Description	L_1 [mm]
16729	MKS40-BRK11-L-5-900	900
16730	MKS40-BRK11-L-5-1200	1200
16731	MKS40-BRK11-L-5-1500	1500
16732	MKS40-BRK11-L-5-1800	1800

Description	Part No.
MKSXX-BR14-XX-XXXX	see table

Type: base tube with dovetail coupling

Material: material mix

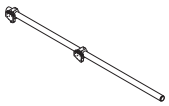

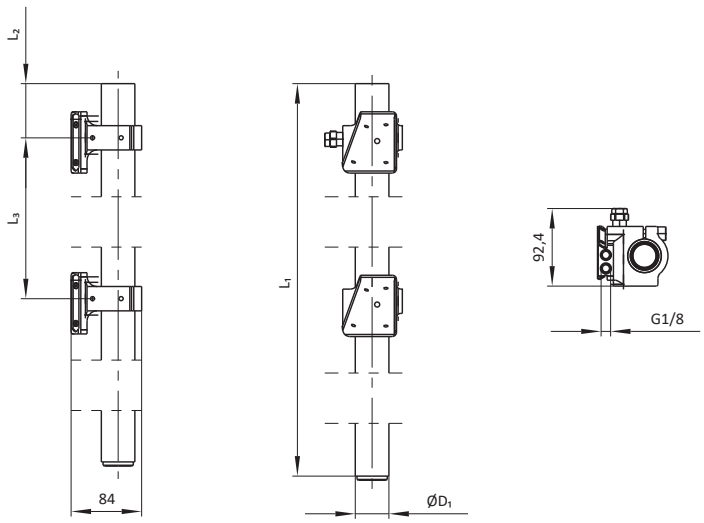

Part No.	Description	D_1 [mm]	L_1 [mm]	L_2 [mm]	L_3 [mm]	m [kg]	Mark
108253	MKS25-BR14-LV-1200	25	1200	64,5	665	10,30	without
108256	MKS25-BR14-RH-1200	25	1200	72	615	10,30	without
102617	MKS40-BR14-LV-1500	40	1500	64,5	665	5,20	coloured mark blue
102620	MKS40-BR14-RH-1500	40	1500	72	615	5,20	coloured mark black

Description	Part No.
MKSXX-BR14-XX-XXXX	see table

Type: base tube with dovetail coupling

Material: material mix

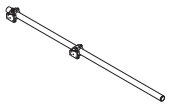

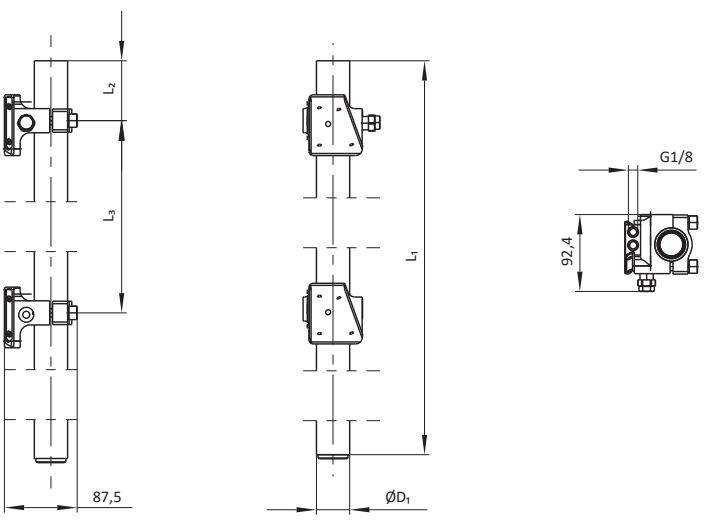

Part No.	Description	D_1 [mm]	L_1 [mm]	L_2 [mm]	L_3 [mm]	m [kg]	Mark
108254	MKS25-BR14-LH-1200	25	1200	72	615	10,30	without
108255	MKS25-BR14-RV-1200	25	1200	64,5	665	10,30	without
102618	MKS40-BR14-LH-1500	40	1500	72	615	5,20	coloured mark yellow
102619	MKS40-BR14-RV-1500	40	1500	64,5	665	5,20	coloured mark green

Accessories for Suction Cup Bar

Description	Part No.
MKS-SKP06-R	18004

Type: air transmission, for quick-release coupling, right

Material: material mix

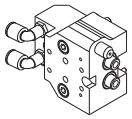

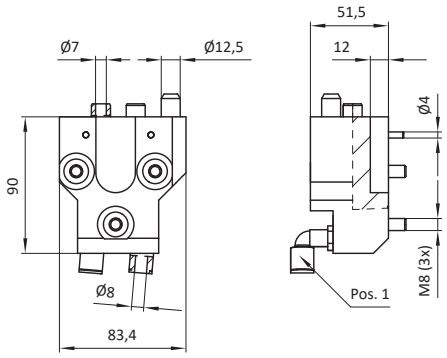

Part No.	Description	m [kg]	Ports [Pos. 1]
18004	MKS-SKP06-R	0,87	Ø 8 mm (2x)

Description	Part No.
MKS-SKP06-L	18005

Type: air transmission, for quick-release coupling, left

Material: material mix

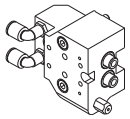

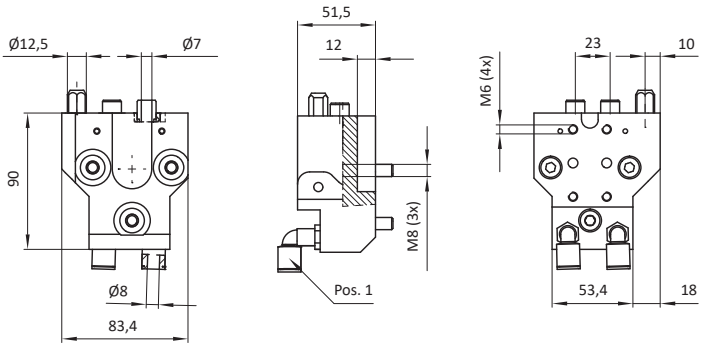

Part No.	Description	m [kg]	Ports [Pos. 1]
18005	MKS-SKP06-L	0,87	Ø 8 mm (2x)

Description	Part No.
MKS-SKP07-2	18009

Type: counter bearing, for quick-release coupling, with support pin

Material: material mix

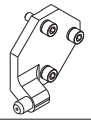

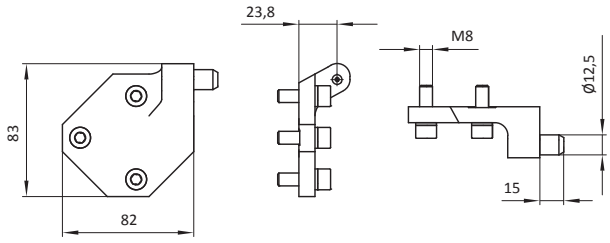

Part No.	Description	m [kg]
18009	MKS-SKP07-2	0,21

Description	Part No.
MKS-SKP07-1	18008

Type: counter bearing, for quick-release coupling, with support pin (DIN6321)

Material: material mix

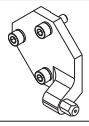

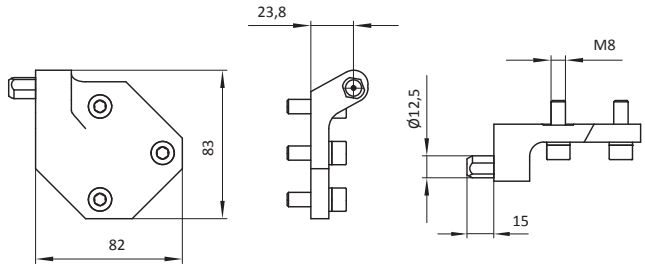

Part No.	Description	m [kg]
18008	MKS-SKP07-1	0,20

Description	Part No.
MKS-SKP06-LS	18007

Type: quick-release coupling, fixed side

Material: material mix

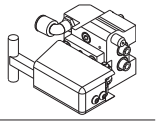

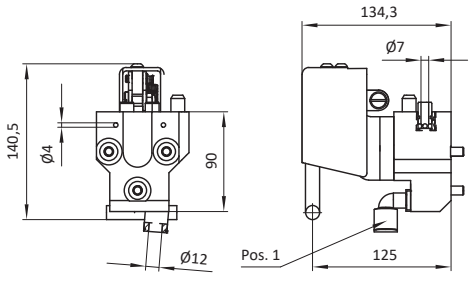

Part No.	Description	m [kg]	Port [Pos. 1]
18007	MKS-SKP06-LS	0,95	Ø 12 mm (1x)

Description	Part No.
MKS-SKP06-RS	18006

Type: quick-release coupling, fixed side

Material: material mix

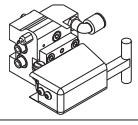

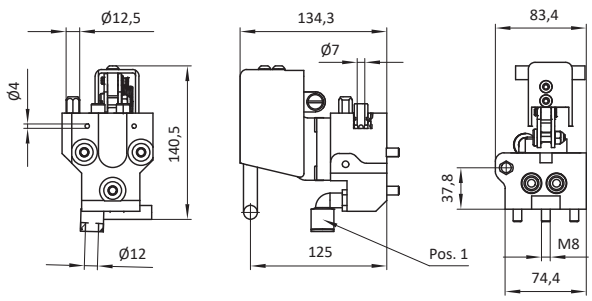

Part No.	Description	m [kg]	Port [Pos. 1]
18006	MKS-SKP06-RS	0,95	Ø 12 mm (1x)

Carrying Frame

Description	Part No.
MKS-TR01-L-XXXX-SL-X	see table

Type: carrying frame (light weight design)

Material: material mix

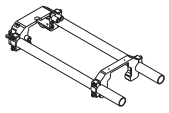

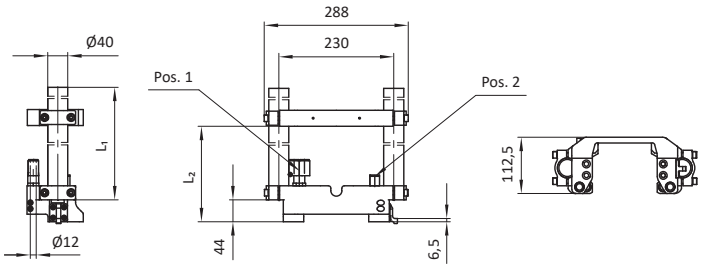

Part No.	Description	L_1 [mm]	L_2 [mm]	m [kg]	Port Y-shape [Pos. 1]	Port [Pos. 2]
103388	MKS-TR01-L-1430-SL	1430	1300	5,44	without fittings	without fittings
105100	MKS-TR01-L-1430-SL-1	1450	1300	5,44	Ø 12 + Ø 12mm (1x)	Ø 12 mm (2x)
107021	MKS-TR01-L-1430-SL-2	1430	1300	5,40	without fittings	without fittings
102485	MKS-TR01-L-1600-SL	1600	1300	4,77	without fittings	without fittings
105102	MKS-TR01-L-1600-SL-1	1600	1300	4,77	Ø 12 + Ø 12mm (1x)	Ø 12 mm (2x)
103390	MKS-TR01-L-640-SL	640	520	3,89	without fittings	without fittings
105098	MKS-TR01-L-640-SL-1	640	520	3,89	Ø 12 + Ø 12mm (1x)	Ø 12 mm (2x)

Description	Part No.
MKS-TR01-R-XXXX-SL-X	see table

Type: carrying frame (light weight design)

Material: material mix

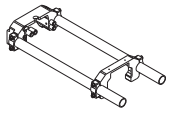

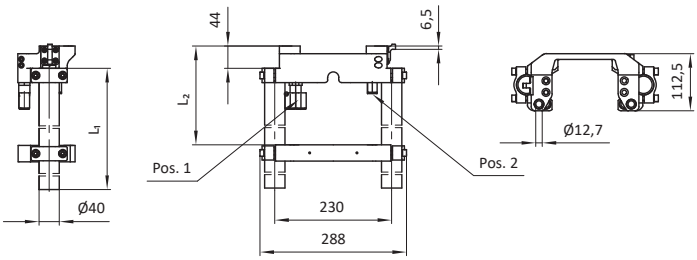

Part No.	Description	L_1 [mm]	L_2 [mm]	m [kg]	Port Y-shape [Pos. 1]	Port [Pos. 2]
103389	MKS-TR01-R-1430-SL	1430	1300	5,44	without fittings	without fittings
105101	MKS-TR01-R-1430-SL-1	1430	1300	5,44	Ø 12 + Ø 12mm (1x)	Ø 12 mm (2x)
107022	MKS-TR01-R-1430-SL-2	1430	1300	5,40	without fittings	without fittings
102486	MKS-TR01-R-1600-SL	1600	1300	4,77	without fittings	without fittings
105103	MKS-TR01-R-1600-SL-1	1600	1300	4,77	Ø 12 + Ø 12mm (1x)	Ø 12 mm (2x)
103391	MKS-TR01-R-640-SL	640	520	3,89	without fittings	without fittings
105099	MKS-TR01-R-640-SL-1	640	520	3,89	Ø 12 + Ø 12mm (1x)	Ø 12 mm (2x)

Description	Part No.
MKS40-TR03-L-1150	100927

Type: carrying frame, left

Material: material mix

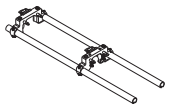

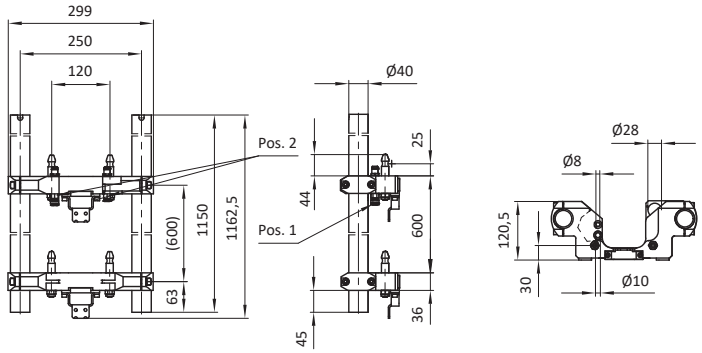

Part No.	Description	m [kg]	Port [Pos. 1]	Port [Pos. 2]
100927	MKS40-TR03-L-1150	6,90	Ø 10 mm (1x)	Ø 8 mm (3x)

Description	Part No.
MKS40-TR05-R-XXXX	see table

Type: carrying frame, right

Material: material mix

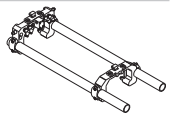

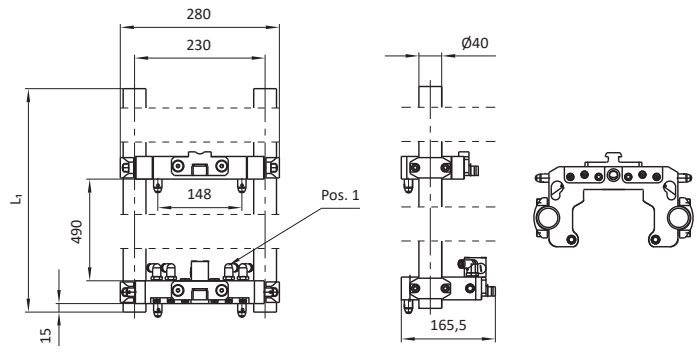

Part No.	Description	L_1 [mm]	m [kg]	Port [Pos. 1]
19074	MKS40-TR05-R-750	750	5,11	Ø 8 mm (4x)
19619	MKS40-TR05-R-1000	1000	5,58	Ø 8 mm (4x)
19620	MKS40-TR05-R-1250	1250	6,05	Ø 8 mm (4x)

Carrying Frame

Description	Part No.
MKS40-TR05-L-XXXX	see table

Type: carrying frame, left

Material: material mix

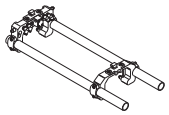

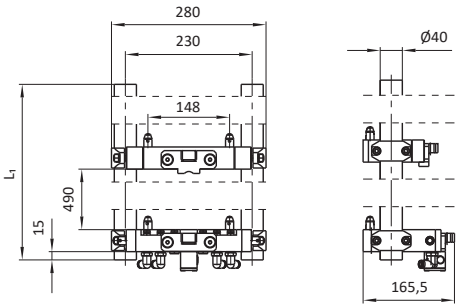

Part No.	Description	L_1 [mm]	m [kg]	Port [Pos. 1]
19073	MKS40-TR05-L-750	750	5,11	Ø 8 mm (4x)
19617	MKS40-TR05-L-1000	1000	5,58	Ø 8 mm (4x)
19618	MKS40-TR05-L-1250	1250	6,05	Ø 8 mm (4x)

Description	Part No.
MKS40-TR07-L/R-XXXX	see table

Type: carrying frame

Material: material mix

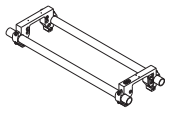

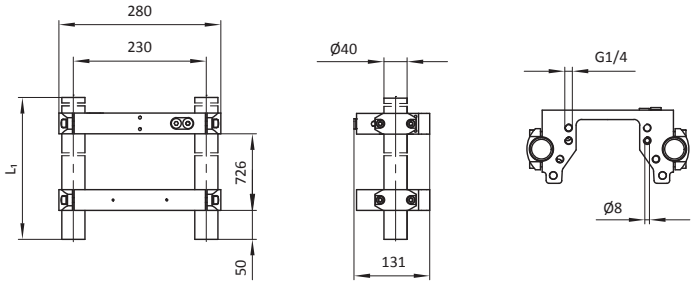

Part No.	Description	L_1 [mm]	m [kg]
101669	MKS40-TR07-L/R-850	850	4,87
101503	MKS40-TR07-L/R-1400	1400	5,90

Description	Part No.
MKS40-TR10-XXXX-L/R-XXXX	see table

Type: carrying frame

Material: material mix

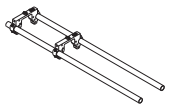

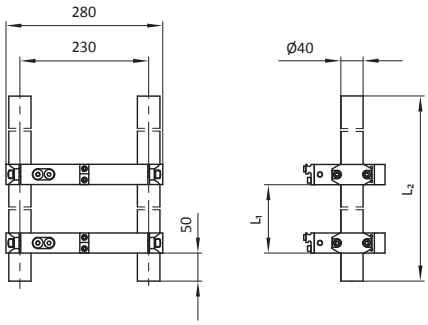

Part No.	Description	L_1 [mm]	L_2 [mm]	m [kg]
102626	MKS40-TR10-450-L/R-1400	450	1400	6,35
102686	MKS40-TR10-1000-L/R-1600	1000	1600	6,59

Description	Part No.
MKS40-TR11-750-L/R-1400	103828

Type: carrying frame

Material: material mix

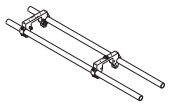

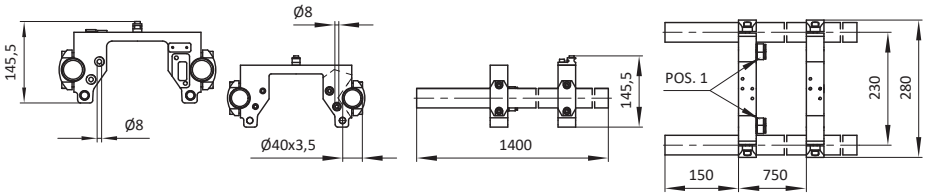

Part No.	Description	Compressed air [Pos. 1]
103828	MKS40-TR11-750-L/R-1400	Ø 8 mm (4x)

Carrying Frame

Description	Part No.
MKS40-TR12-1364-L-1550	103833

Type: carrying frame, left

Material: material mix

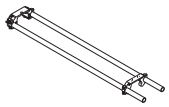

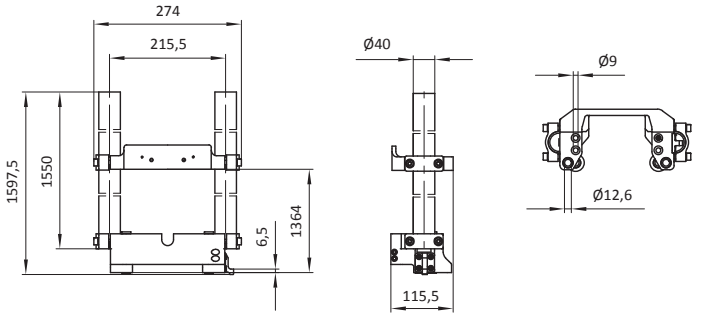

Part No.	Description	m [kg]
103833	MKS40-TR12-1364-L-1550	5,52

Description	Part No.
MKS-TR01-1364-R-1550	103834

Type: carrying frame, right

Material: material mix

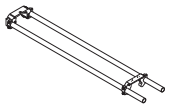

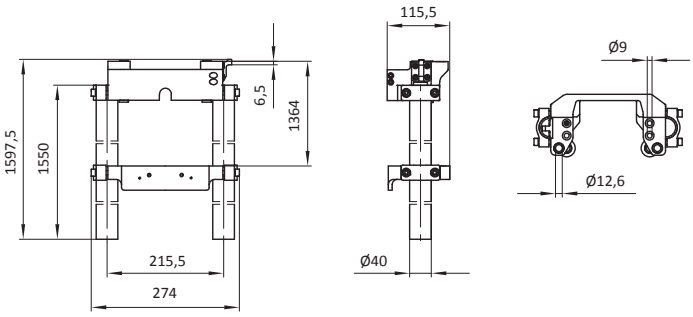

Part No.	Description	m [kg]
103834	MKS40-TR12-1364-R-1550	5,52

Description	Part No.
MKS40-TR13-350-L-1400	103843

Type: carrying frame, left

Material: material mix

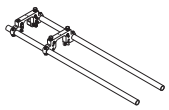

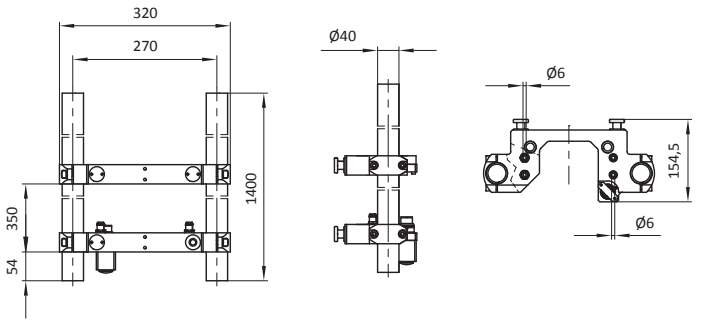

Part No.	Description
103843	MKS40-TR13-350-L-1400

Description	Part No.
MKS40-TR13-350-R-1400	104009

Type: carrying frame, right

Material: material mix

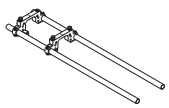

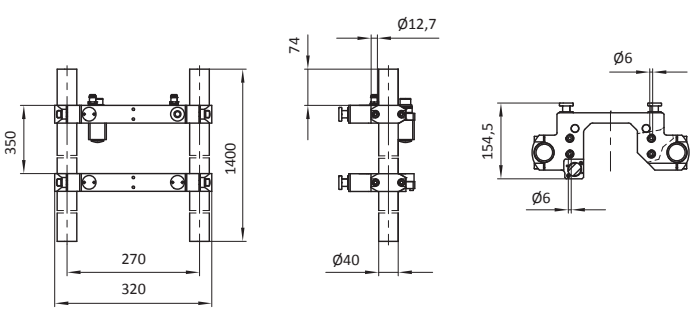

Part No.	Description
104009	MKS40-TR13-350-R-1400

Carrying Frame

Description	Part No.
MKS40-TR17-1190	104253

Type: carrying frame

Material: material mix

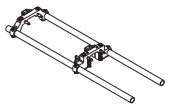

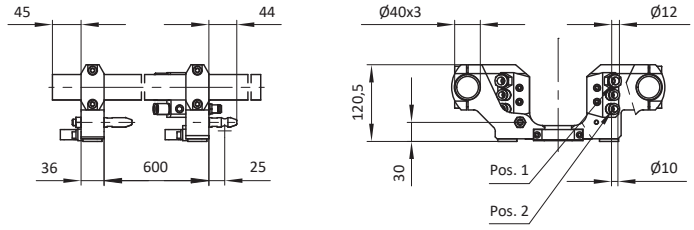

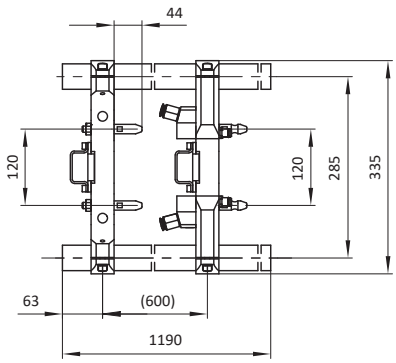

Part No.	Description	m [kg]	Port [Pos. 1]	Port [Pos. 2]
104253	MKS40-TR17-1190	7,50	Ø 12 mm (2x)	Ø 10 mm (4x)

Carrying Frame Components (Tooling Bracket)

Description	Part No.
MKS-BR01-L-SL-X	see table

Type: tooling bracket with tightening fastener, left, light weight design

Material: material mix

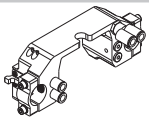

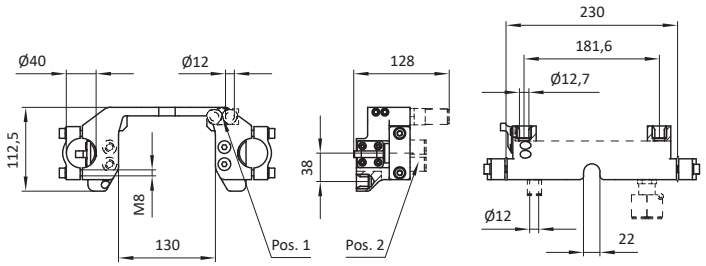

Part No.	Description	m [kg]	Port Y-shape [Pos. 1]	Port [Pos. 2]
102489	MKS-BR01-L-SL	1,68	without fittings	without fittings
105104	MKS-BR01-L-SL-1	1,77	Ø 12mm (1x)	Ø 12 mm (2x)

Description	Part No.
MKS-BR01-R-SL-X	see table

Type: tooling bracket with tightening fastener, right, light weight design

Material: material mix

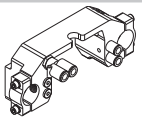

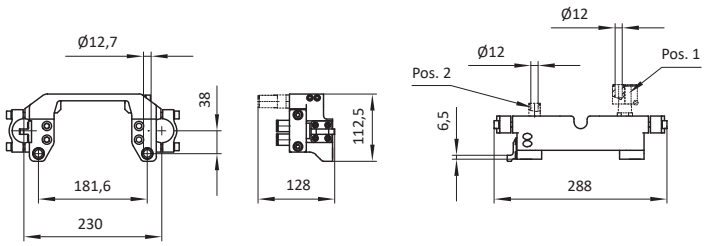

Part No.	Description	m [kg]	Port Y-shape [Pos. 1]	Port [Pos. 2]
102490	MKS-BR01-R-SL	1,70	without fittings	without fittings
105105	MKS-BR01-R-SL-1	1,76	Ø 12 + Ø 12mm (1x)	Ø 12 mm (2x)

Description	Part No.
MKS40-BRXX-L	see table

Type: tooling bracket

Material: material mix

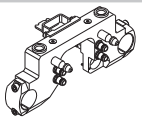

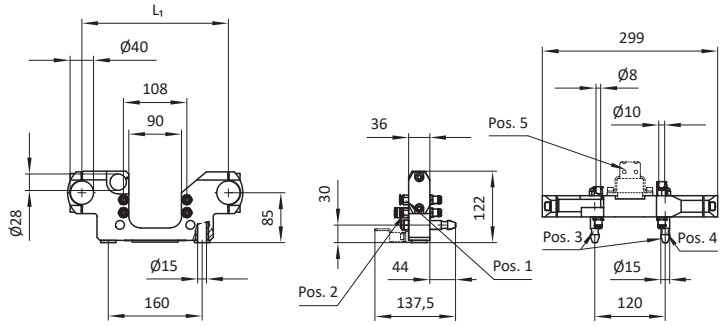

Part No.	Description	L_1 [mm]	m [kg]	Port [Pos. 1]	Port [Pos. 2]	Pin Ø15mm [Pos. 3]	Support pin (DIN 6321 type C) Ø15mm [Pos. 4]	Handle [Pos. 5]	Connector	Tightening fastener
17582	MKS40-BR04-L	230	1,44	without fittings	without fittings	-	-	no	left (1x)	central (1x)
100926	MKS40-BR07-L	250	2,38	Ø 8 mm (3x)	Ø 10 mm (1x)	2	-	yes	-	-
106307	MKS40-BR22-L	230	2,19	Ø 8 mm (4x)	without fittings	1	1	yes	-	-

Description	Part No.
MKS40-BR06	19075

Type: tooling bracket

Material: material mix

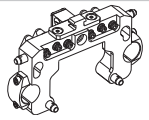

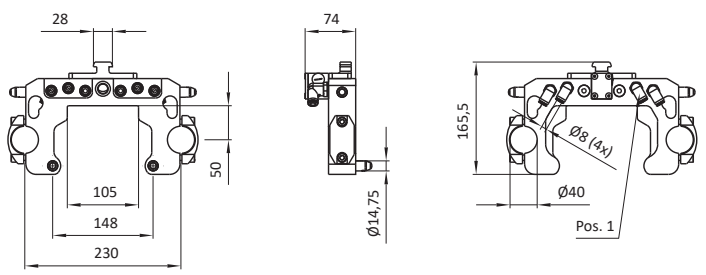

Part No.	Description	m [kg]	Port [Pos. 1]
19075	MKS40-BR06	2,48	Ø 8 mm (4x)

Description	Part No.
MKS40-BRXX	see table

Type: tooling bracket with / without locking hook

Material: material mix

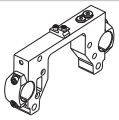

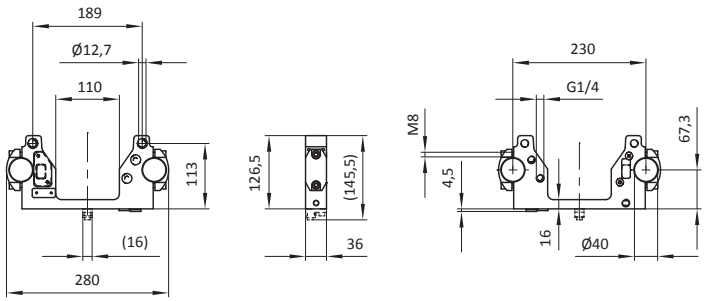

Part No.	Description	m [kg]	Locking hook
101564	MKS40-BR09	1,65	no
102151	MKS40-BR12	1,60	yes

Carrying Frame Components (Tooling Bracket)

Description	Part No.
MKS40-BRXX-X	see table

Type: tooling bracket with / without single-sided pockets

Material: material mix

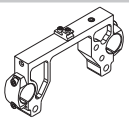

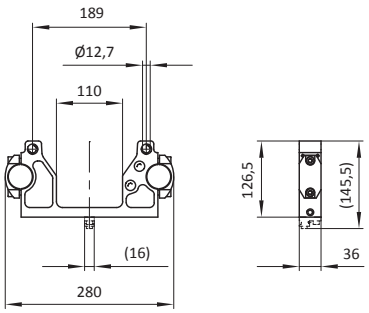

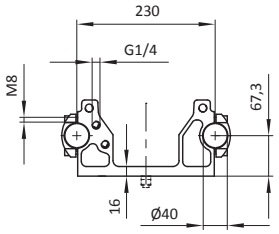

Part No.	Description	m [kg]	Special feature
104288	MKS40-BR12-1	1,45	light weight design
105948	MKS40-BR15-2	1,71	-

Description	Part No.
MKS40-BR1X-X	see table

Type: tooling bracket

Material: material mix

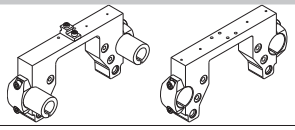

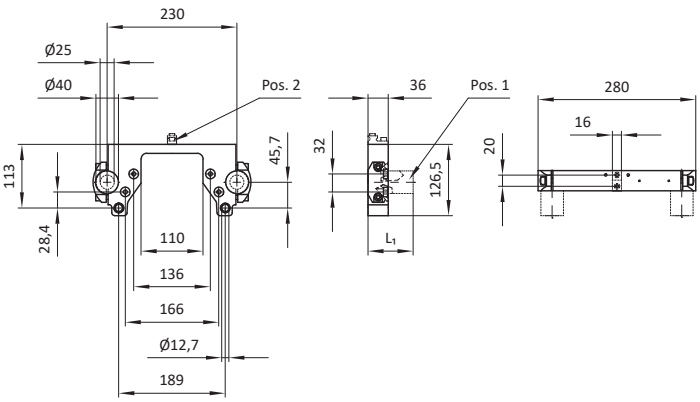

Part No.	Description	L_1 [mm]	m [kg]	Number of blind plugs	Reduction [Pos. 1]	Locking hook [Pos. 2]
103829	MKS40-BR15	36	1,67	0	no	no
104210	MKS40-BR19	80	2,25	0	yes	yes
104211	MKS40-BR19-1	36	2,17	2	yes	no
104283	MKS40-BR19-2	80	2,05	4	yes	yes
104284	MKS40-BR19-3	80	1,96	0	yes	no

Description	Part No.
MKS40-BR15-X	see table

Type: tooling bracket

Material: material mix

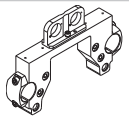

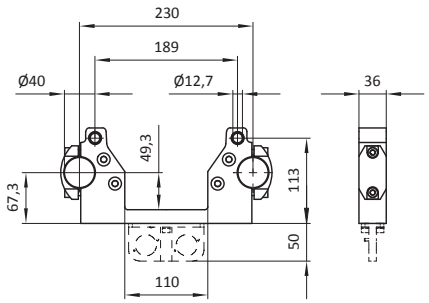

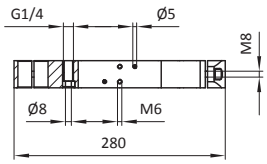

Part No.	Description	m [kg]	Mounting
105947	MKS40-BR15-1	1,8	double-connector mounting
107025	MKS40-BR15-3	1,9	single-connector mounting

Description	Part No.
MKS40-BR17-X	see table

Type: tooling bracket

Material: material mix

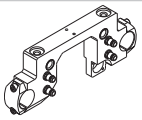

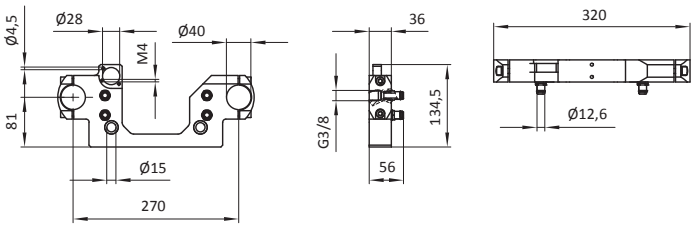

Part No.	Description	m [kg]	Air transmission
103844	MKS40-BR17	1,91	without hollow screw
104166	MKS40-BR17-1	2,00	with hollow screw

Technical changes and errors are subject to change without notice!
www.springer.group
Document Date: CW 12.2025

Carrying Frame Components (Tooling Bracket)

Description	Part No.
MKS40-BR16-R-X	see table

Type: tooling bracket with tightening fastener, right

Material: aluminium

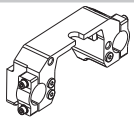

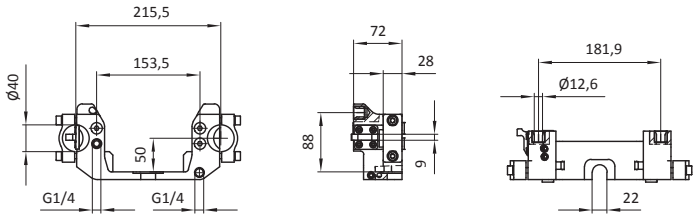

Part No.	Description	m [kg]
103836	MKS40-BR16-R	1,70
106860	MKS40-BR16-R-1	1,76

Description	Part No.
MKS40-BR16-L-X	see table

Type: tooling bracket with tightening fastener, left

Material: aluminium

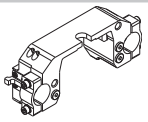

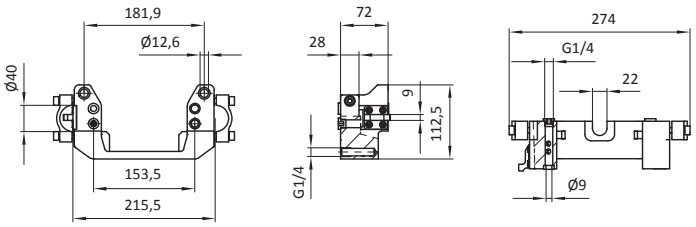

Part No.	Description	m [kg]
103835	MKS40-BR16-L	1,70
106859	MKS40-BR16-L-1	1,76

Description	Part No.
MKS40-BR21-1	104293

Type: tooling bracket with ports

Material: material mix

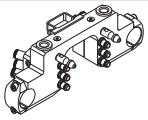

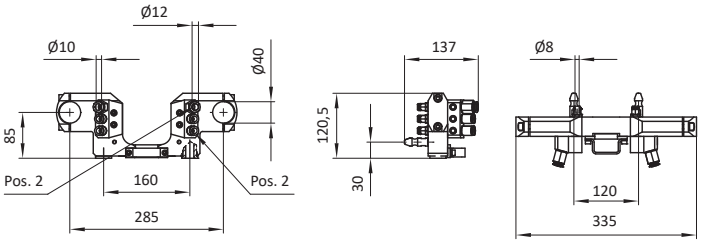

Part No.	Description	m [kg]	Port [Pos. 1]	Port [Pos. 2]
104293	MKS40-BR21-1	3,25	Ø 10 mm (4x)	Ø 12 mm (2x)

Description	Part No.
MKS40-BRK21-2	104294

Type: tooling bracket with guiding pin

Material: material mix

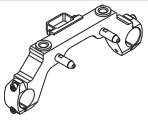

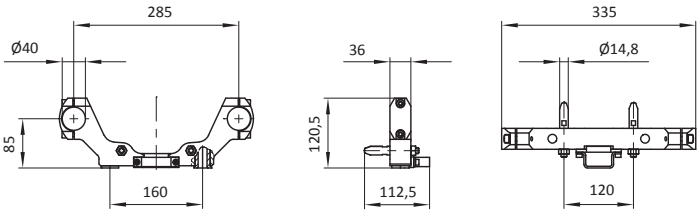

Part No.	Description	m [kg]
104294	MKS40-BR21-2	1,92

Description	Part No.
MKS25-BR18-L	107539

Type: tooling bracket with ports, loose side, with screw for query

Material: material mix

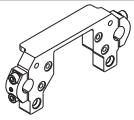

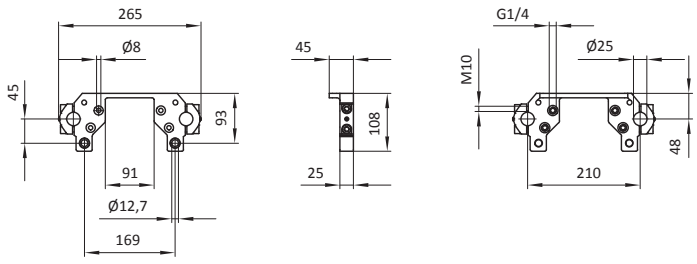

Part No.	Description	m [kg]
107539	MKS25-BR18-L	0,91

Carrying Frame Components (Counter Mounting)

Description	Part No.
MKS-GH01-SL	102491

Type: counter mounting, light weight design

Material: material mix

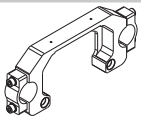

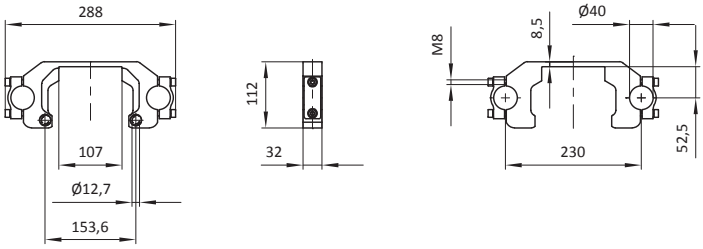

Part No.	Description	m [kg]
102491	MKS-GH01-SL	0,90

Description	Part No.
MKS40-GH05	19089

Type: counter mounting, with locking hook

Material: material mix

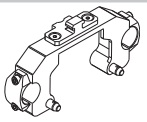

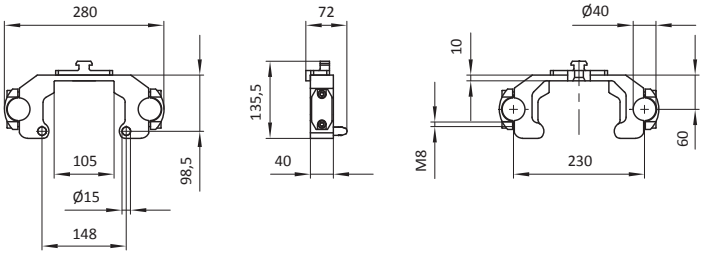

Part No.	Description	m [kg]
19089	MKS40-GH05	1,60

Description	Part No.
MKS40-GHXX-X	see table

Type: counter mounting with / without locking hook

Material: material mix

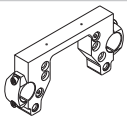

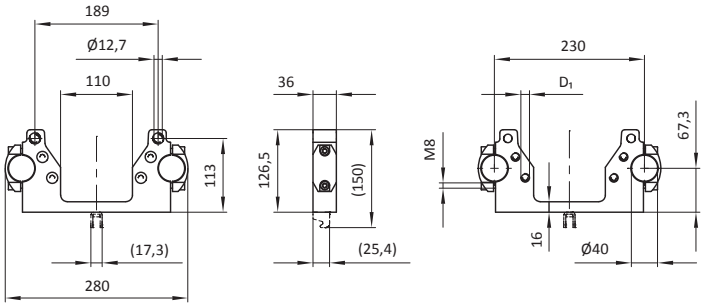

Part No.	Description	D_1 [mm]	m [kg]	Locking hook
101633	MKS40-GH09	G1/4	1,63	no
101927	MKS40-GH10	-	1,70	yes
102143	MKS40-GH10-1	G1/4	1,67	yes

Description	Part No.
MKS40-GH14	103837

Type: counter mounting

Material: material mix

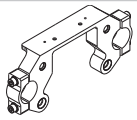

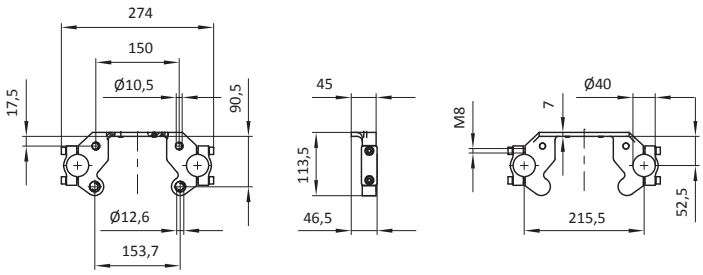

Part No.	Description	m [kg]
103837	MKS40-GH14	0,89

Description	Part No.
MKS25-GH18-L-SX	see table

Type: counter mounting

Material: material mix

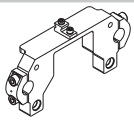

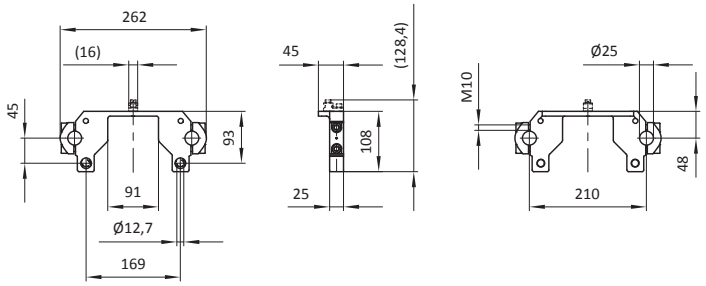

Part No.	Description	m [kg]	Locking feature
107483	MKS25-GH18-L-S1	1,04	with locking hook
107484	MKS25-GH18-L-S2	0,98	without locking hook
107538	MKS25-GH18-L-S3	0,98	without locking hook, with raised head screw

Description	Part No.
MKS-GH18-F-SX	see table

Type: counter mounting

Material: material mix

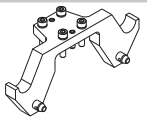

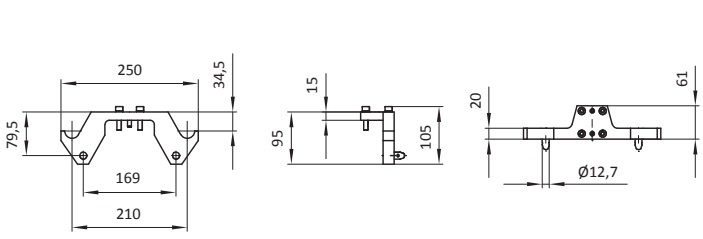

Part No.	Description	m [kg]	Clamp
107481	MKS-GH18-F-S1	1,50	yes
107482	MKS-GH18-F-S2	0,79	no

Coupling for Carrying Frame

Description	Part No.
MKS-SKP09-X-XX	see table

Type: quick-release coupling, fixed side, for carrying frame

Material: material mix

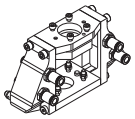

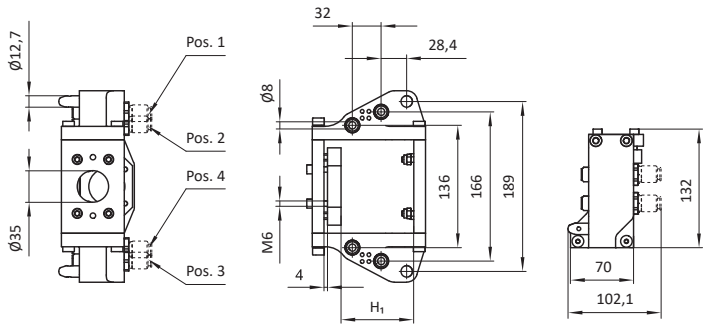

Part No.	Description	H_1 [mm]	m [kg]	Port [Pos. 1]	Port [Pos. 2]	Port [Pos. 3]	Port [Pos. 4]
104443	MKS-SKP09-0	100	1,85	without	without	without	without
105427	MKS-SKP09-1-S1	90	1,77	without	without	without	without
102629	MKS-SKP09-2	90	1,85	port straight 10mm	port straight 10mm	without	without
103838	MKS-SKP09-3	90	2,24	port straight 10mm	port straight 10mm	port straight 10mm	port straight 10mm
104259	MKS-SKP09-4	90	2,24	without	without	port straight 8 mm	port straight 8 mm
104285	MKS-SKP09-6	100	2,27	connection G1/4" IG	connection G1/4" IG	connection G1/4" IG	connection G1/4" IG

Description	Part No.
MKS-SKP09-X	see table

Type: quick-release coupling, fixed side, with safety catch, for carrying frame

Material: material mix

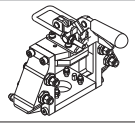

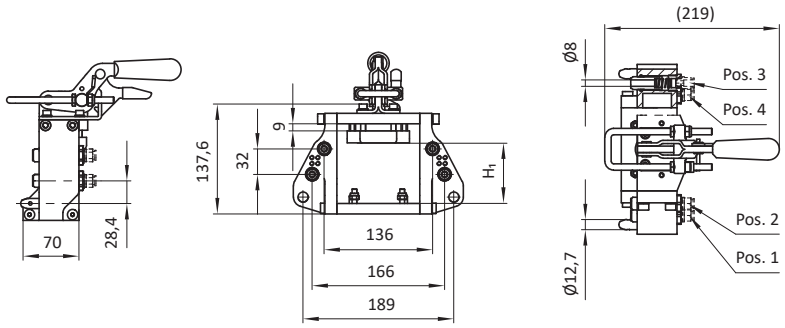

Part No.	Description	H_1 [mm]	m [kg]	Port [Pos. 1]	Port [Pos. 2]	Port [Pos. 3]	Port [Pos. 4]
102628	MKS-SKP09-1	100	2,40	without	without	without	without
104260	MKS-SKP09-5	90	2,38	port straight 8 mm	port straight 8 mm	port straight 8 mm	port straight 8 mm
104286	MKS-SKP09-7	100	3,39	blind plug M20x1,5	blind plug M20x1,5	blind plug M20x1,5	blind plug M20x1,5
104444	MKS-SKP09-8	100	3,39	connection G1/4" IG	connection G1/4" IG	without	without

Tubular Coupling

Description	Part No.
MKS-KOE09-8	107585

Type: tubular coupling, fixed side, with safety catch

Material: material mix

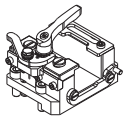

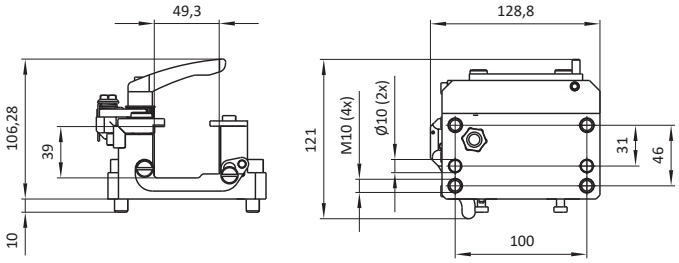

Part No.	Description	m [kg]
107585	MKS-KOE09-8	1,30

Description	Part No.
MKS-KOE09	100472

Type: tubular coupling, fixed side, with safety catch

Material: material mix

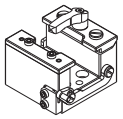

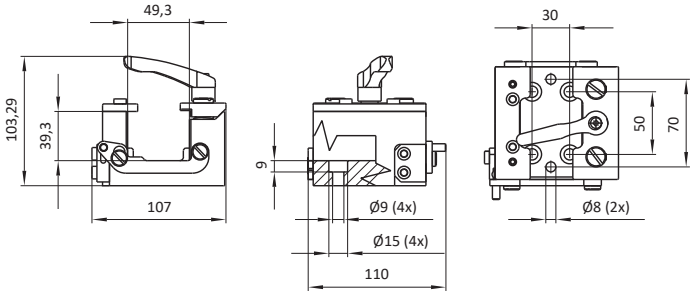

Part No.	Description	m [kg]
100472	MKS-KOE09	2,95

Description	Part No.
MKS-KOE01-AL	17603

Type: tubular coupling, fixed side

Material: material mix

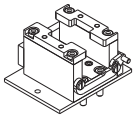

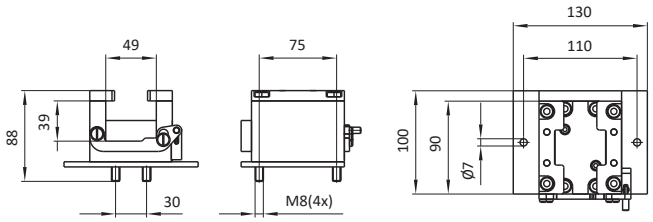

Part No.	Description	m [kg]
17603	MKS-KOE01-AL	1,11

Description	Part No.
MKS-KOE05-AL	16950

Type: tubular coupling, fixed side

Material: material mix

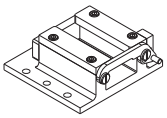

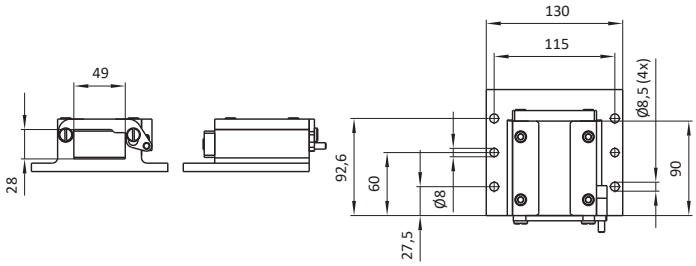

Part No.	Description	m [kg]
16950	MKS-KOE05-AL	0,98

Description	Part No.
MKS-KOE08	18245

Type: tubular coupling, fixed side

Material: material mix

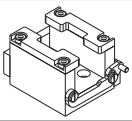

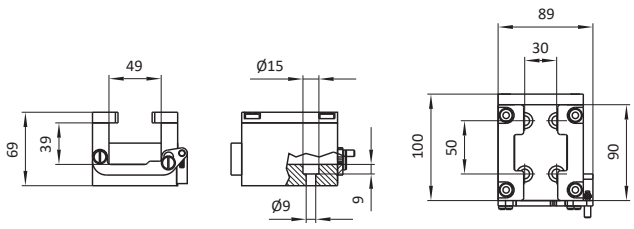

Part No.	Description	m [kg]
18245	MKS-KOE08	2,94

Description	Part No.
MKS-KOE09-6	107110

Type: tubular coupling, fixed side, with safety catch

Material: material mix

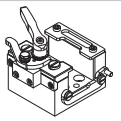

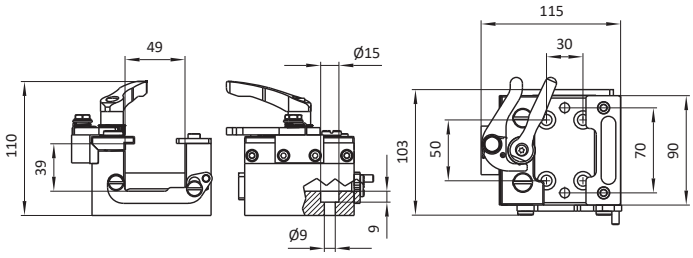

Part No.	Description	m [kg]
107110	MKS-KOE09-6	1,41

Tubular Coupling

Description	Part No.
MKS-KOE12	105093

Type: tubular coupling, fixed side, with safety catch

Material: material mix

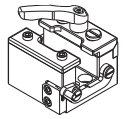

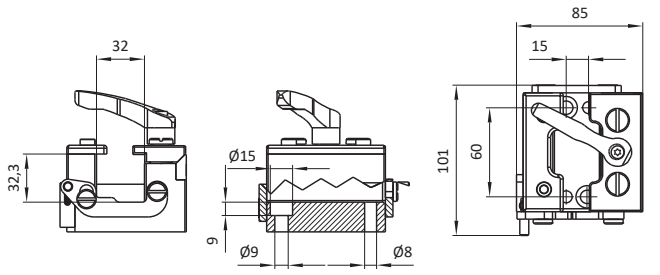

Part No.	Description	m [kg]
105093	MKS-KOE12	1,04

Description	Part No.
MKS20-AK146-100	108035

Type: tubular coupling, loose side

Material: steel

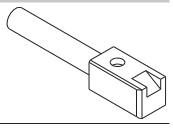

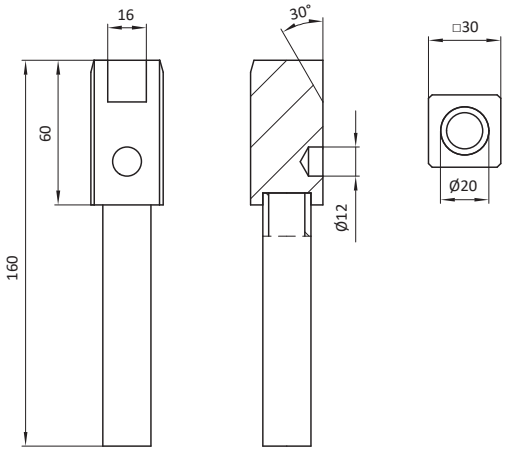

Part No.	Description	m [kg]
108035	MKS20-AK146-100	0,50

Description	Part No.
MKS30-AKXXX-XXX-AL	see table

Type: tubular coupling, loose side

Material: aluminium

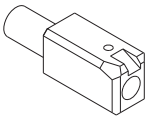

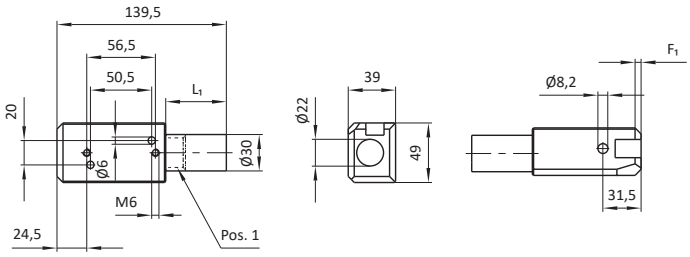

Part No.	Description	L_1 [mm]	F_1 [mm]	m [kg]	Undercut [Pos.1]
102623	MKS30-AK42-100-AL	100	1	0,48	no
105252	MKS30-AK42-150-AL	150	1	0,55	no
107373	MKS30-AK144-200-AL	200	5	0,64	yes
107090	MKS30-AK144-250-AL	250	5	0,74	yes

Description	Part No.
MKS30-AK16B-K-XXX	see table

Type: tubular coupling, loose side

Material: steel

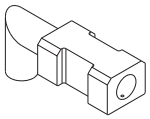

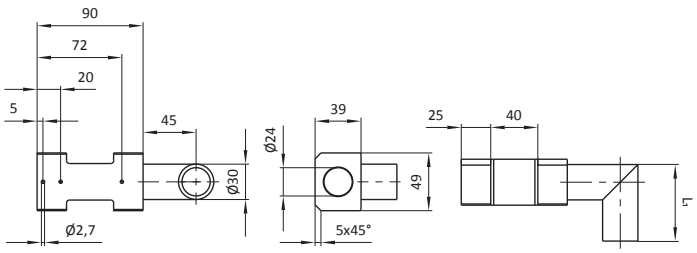

Part No.	Description	L_1 [mm]	m [kg]
100259	MKS30-AK16B-K-100	100	1,12
100260	MKS30-AK16B-K-150	150	1,22
100261	MKS30-AK16B-K-200	200	1,26
100262	MKS30-AK16B-K-250	250	1,37

Tubular Coupling

Description	Part No.
MKS30-AKXXXB-XX-XXX-XX	see table

Type: tubular coupling, loose side

Material: see table

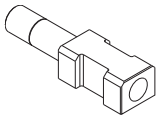

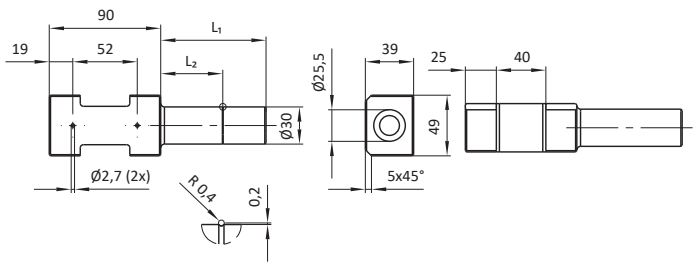

Part No.	Description	L_1 [mm]	L_2 [mm]	m [kg]	Material
10743	MKS30-AK11B-100	100	50	0,97	D
10744	MKS30-AK11B-150	150	50	1,07	D
100988	MKS30-AK11B-175	175	50	1,12	D
10745	MKS30-AK11B-200	200	50	1,18	D
10746	MKS30-AK11B-250	250	50	1,27	D
106065	MKS30-AK102B-AL-85-HE	85	50	0,41	I
101481	MKS30-AK102B-AL-100-HE	100	50	0,44	I
101482	MKS30-AK102B-AL-150-HE	150	50	0,54	I

Description	Part No.
MKS20-AK95-70-AL	16949

Type: tubular coupling, loose side

Material: aluminium

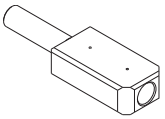

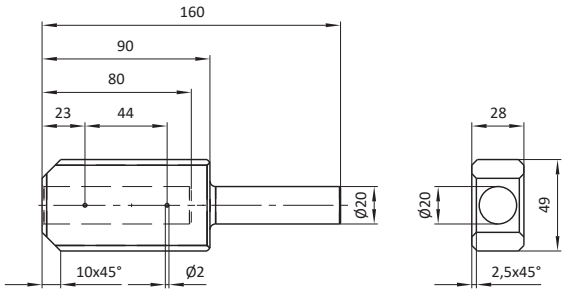

Part No.	Description	m [kg]
16949	MKS20-AK95-70-AL	0,33

Description	Part No.
MKS2X-AK63-50-XX	see table

Type: tubular coupling, loose side

Material: see table

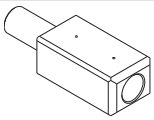

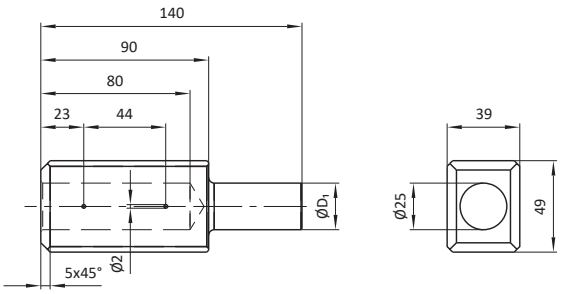

Part No.	Description	D_1 [mm]	m [kg]	Material
13213	MKS20-AK63-50	20	1,15	D
17602	MKS20-AK63-50-AL	20	0,41	I
104868	MKS25-AK63-50-AL	25	0,43	I

Description	Part No.
MKS25-AK31-XXX-AL	see table

Type: tubular coupling, loose side

Material: aluminium

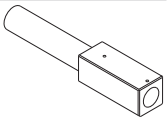

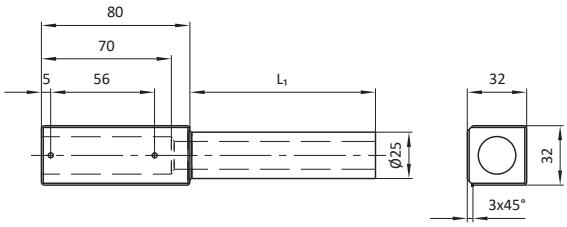

Part No.	Description	L_1 [mm]	m [kg]
105096	MKS25-AK31-100-AL	100	0,24
105097	MKS25-AK31-150-AL	150	0,28

Material
D → steel
I → aluminium

Technical changes and errors are subject to change without notice!
www.springer.group
Document Date: CW 12.2025

Tubular Coupling

Description	Part No.
MKS30-AK72-110	103175

Type: tubular coupling, loose side

Material: steel

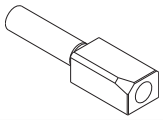

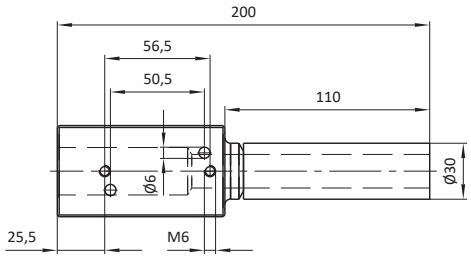

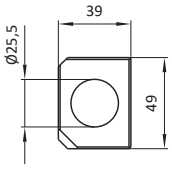

Part No.	Description	m [kg]
103175	MKS30-AK72-1-110	1,38

Description	Part No.
MKS30-AK98-150	16823

Type: tubular coupling, loose side

Material: aluminium

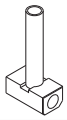

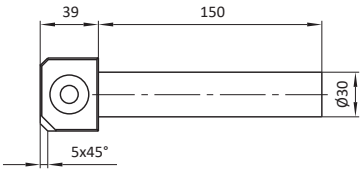

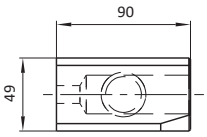

Part No.	Description	m [kg]
16823	MKS30-AK98-150	1,29

Description	Part No.
MKS30-AK127-110	102525

Type: tubular coupling, loose side

Material: steel

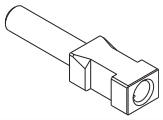

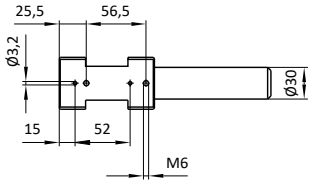



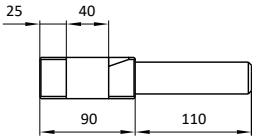

Part No.	Description	m [kg]
102525	MKS30-AK127-110	1,23

Tubular Coupling

Description	Part No.
MKS20-AK138-XXX-XX	see table

Type: tubular coupling, encoded, loose side

Material: aluminium

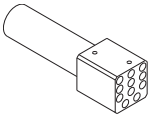

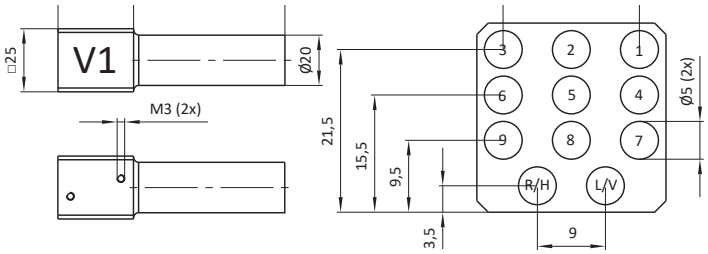

Part No.	Description	L_1 [mm]	Code labelled	Thread for marking	Coding	Hole V	H	L	R	1	2	3	4	5	6	7	8	9	m [kg]
105791	MKS20-AK138-60-V1	60	V1	no	V+1	X				X									0,09
105792	MKS20-AK138-60-V2	60	V2	no	V+2	X					X								0,09
105793	MKS20-AK138-60-V3	60	V3	no	V+3	X						X							0,09
105794	MKS20-AK138-60-V4	60	V4	no	V+4	X							X						0,09
105795	MKS20-AK138-60-V5	60	V5	no	V+5	X								X					0,09
105796	MKS20-AK138-60-V6	60	V6	no	V+6	X									X				0,09
105797	MKS20-AK138-60-V7	60	V7	no	V+7	X										X			0,09
105798	MKS20-AK138-60-V8	60	V8	no	V+8	X											X		0,09
105799	MKS20-AK138-60-V9	60	V9	no	V+9	X												X	0,09
105809	MKS20-AK138-60-H1	60	H1	no	H+1		X			X									0,09
105810	MKS20-AK138-60-H2	60	H2	no	H+2		X				X								0,09
105811	MKS20-AK138-60-H3	60	H3	no	H+3		X					X							0,09
105812	MKS20-AK138-60-H4	60	H4	no	H+4		X						X						0,09
105813	MKS20-AK138-60-H5	60	H5	no	H+5		X							X					0,09
105814	MKS20-AK138-60-H6	60	H6	no	H+6		X								X				0,09
105815	MKS20-AK138-60-H7	60	H7	no	H+7		X									X			0,09
105816	MKS20-AK138-60-H8	60	H8	no	H+8		X										X		0,09
105817	MKS20-AK138-60-H9	60	H9	no	H+9		X											X	0,09
106376	MKS20-AK138-60-1	60	no	no	without														0,09
105490	MKS20-AK138-60-L1	60	no	M3 (2X)	L+1			X		X									0,09
105491	MKS20-AK138-60-L2	60	no	M3 (2X)	L+2			X			X								0,09
105492	MKS20-AK138-60-L3	60	no	M3 (2X)	L+3			X				X							0,09
105493	MKS20-AK138-60-L4	60	no	M3 (2X)	L+4			X					X						0,09
105494	MKS20-AK138-60-L5	60	no	M3 (2X)	L+5			X						X					0,09
105495	MKS20-AK138-60-L6	60	no	M3 (2X)	L+6			X							X				0,09
105496	MKS20-AK138-60-L7	60	no	M3 (2X)	L+7			X								X			0,09
105497	MKS20-AK138-60-L8	60	no	M3 (2X)	L+8			X									X		0,09
105498	MKS20-AK138-60-L9	60	no	M3 (2X)	L+9			X										X	0,09
105499	MKS20-AK138-60-R1	60	no	M3 (2X)	R+1				X	X									0,09
105500	MKS20-AK138-60-R2	60	no	M3 (2X)	R+2				X		X								0,09
105501	MKS20-AK138-60-R3	60	no	M3 (2X)	R+3				X			X							0,09
105502	MKS20-AK138-60-R4	60	no	M3 (2X)	R+4				X				X						0,09
105503	MKS20-AK138-60-R5	60	no	M3 (2X)	R+5				X					X					0,09
105504	MKS20-AK138-60-R6	60	no	M3 (2X)	R+6				X						X				0,09
105505	MKS20-AK138-60-R7	60	no	M3 (2X)	R+7				X							X			0,09
105506	MKS20-AK138-60-R8	60	no	M3 (2X)	R+8				X								X		0,09
105507	MKS20-AK138-60-R9	60	no	M3 (2X)	R+9				X									X	0,09
106374	MKS20-AK138-60	60	no	M3 (2X)	without														0,09

Tubular Coupling

Part No.	Description	L_1 [mm]	Code labelled	Thread for marking	Coding	Hole													m
						V	H	L	R	1	2	3	4	5	6	7	8	9	[kg]
105800	MKS20-AK138-75-V1	75	V1	no	V+1	X				X									0,11
105801	MKS20-AK138-75-V2	75	V2	no	V+2	X					X								0,11
105802	MKS20-AK138-75-V3	75	V3	no	V+3	X						X							0,11
105803	MKS20-AK138-75-V4	75	V4	no	V+4	X							X						0,11
105804	MKS20-AK138-75-V5	75	V5	no	V+5	X								X					0,11
105805	MKS20-AK138-75-V6	75	V6	no	V+6	X									X				0,11
105806	MKS20-AK138-75-V7	75	V7	no	V+7	X										X			0,11
105807	MKS20-AK138-75-V8	75	V8	no	V+8	X											X		0,11
105808	MKS20-AK138-75-V9	75	V9	no	V+9	X												X	0,11
105818	MKS20-AK138-75-H1	75	H1	no	H+1		X			X									0,11
105819	MKS20-AK138-75-H2	75	H2	no	H+2		X				X								0,11
105820	MKS20-AK138-75-H3	75	H3	no	H+3		X					X							0,11
105821	MKS20-AK138-75-H4	75	H4	no	H+4		X						X						0,11
105822	MKS20-AK138-75-H5	75	H5	no	H+5		X							X					0,11
105823	MKS20-AK138-75-H6	75	H6	no	H+6		X								X				0,11
105824	MKS20-AK138-75-H7	75	H7	no	H+7		X									X			0,11
105825	MKS20-AK138-75-H8	75	H8	no	H+8		X										X		0,11
105826	MKS20-AK138-75-H9	75	H9	no	H+9		X											X	0,11
106377	MKS20-AK138-75-1	75	without	no	without														0,11
105508	MKS20-AK138-100-L1	100	no	M3 (2X)	L+1			X		X									0,13
105509	MKS20-AK138-100-L2	100	no	M3 (2X)	L+2			X			X								0,13
105510	MKS20-AK138-100-L3	100	no	M3 (2X)	L+3			X				X							0,13
105511	MKS20-AK138-100-L4	100	no	M3 (2X)	L+4			X					X						0,13
105512	MKS20-AK138-100-L5	100	no	M3 (2X)	L+5			X						X					0,13
105513	MKS20-AK138-100-L6	100	no	M3 (2X)	L+6			X							X				0,13
105514	MKS20-AK138-100-L7	100	no	M3 (2X)	L+7			X								X			0,13
105515	MKS20-AK138-100-L8	100	no	M3 (2X)	L+8			X									X		0,13
105516	MKS20-AK138-100-L9	100	no	M3 (2X)	L+9			X										X	0,13
105517	MKS20-AK138-100-R1	100	no	M3 (2X)	R+1				X	X									0,13
105518	MKS20-AK138-100-R2	100	no	M3 (2X)	R+2				X		X								0,13
105519	MKS20-AK138-100-R3	100	no	M3 (2X)	R+3				X			X							0,13
105520	MKS20-AK138-100-R4	100	no	M3 (2X)	R+4				X				X						0,13
105521	MKS20-AK138-100-R5	100	no	M3 (2X)	R+5				X					X					0,13
105522	MKS20-AK138-100-R6	100	no	M3 (2X)	R+6				X						X				0,13
105523	MKS20-AK138-100-R7	100	no	M3 (2X)	R+7				X							X			0,13
105524	MKS20-AK138-100-R8	100	no	M3 (2X)	R+8				X								X		0,13
105525	MKS20-AK138-100-R9	100	no	M3 (2X)	R+9				X									X	0,13
106375	MKS20-AK138-100	100	no	M3 (2X)	without														0,13

2-Channel-Coupling (fixed side)

Description	Part No.
MKS-KPP36-XXX	see table

Type: 2-channel, encoded, fixed side, with safety catch

Material: material mix

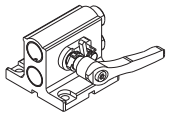

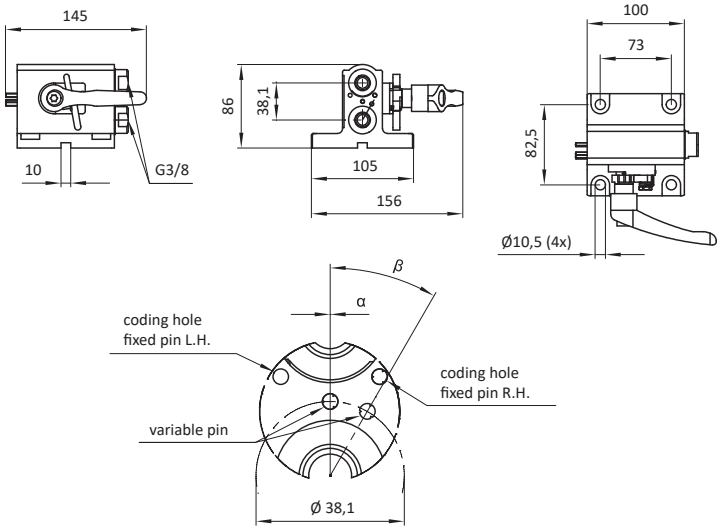

Part No.	Description	α [°]	β [°]	m [kg]	Master-Mount-No.
102625	MKS-KPP36	-	-	1,45	-
103126	MKS-KPP36-L01	0	-	1,46	L01
103127	MKS-KPP36-L02	10	-	1,46	L02
103128	MKS-KPP36-L03	20	-	1,46	L03
103129	MKS-KPP36-L04	30	-	1,46	L04
103130	MKS-KPP36-L05	40	-	1,46	L05
103131	MKS-KPP36-L06	50	-	1,46	L06
103132	MKS-KPP36-L07	130	-	1,46	L07
103133	MKS-KPP36-L08	140	-	1,46	L08
103134	MKS-KPP36-L09	150	-	1,46	L09
103135	MKS-KPP36-L10	160	-	1,46	L10
103136	MKS-KPP36-L11	170	-	1,46	L11
103137	MKS-KPP36-L12	180	-	1,46	L12
103138	MKS-KPP36-L13	190	-	1,46	L13
103139	MKS-KPP36-L14	200	-	1,46	L14
103140	MKS-KPP36-L15	210	-	1,46	L15
103141	MKS-KPP36-L16	220	-	1,46	L16
103142	MKS-KPP36-L17	230	-	1,46	L17
103143	MKS-KPP36-L18	310	-	1,46	L18
103144	MKS-KPP36-L19	320	-	1,46	L19
104062	MKS-KPP36-L20	330	-	1,46	L20
104063	MKS-KPP36-L21	340	-	1,46	L21
104064	MKS-KPP36-L22	350	-	1,46	L22
104076	MKS-KPP36-L23	0	30	1,46	L23
104077	MKS-KPP36-L24	10	40	1,46	L24
104078	MKS-KPP36-L25	20	50	1,46	L25
106566	MKS-KPP36-L26	0	130	1,46	L26
106567	MKS-KPP36-L27	0	140	1,46	L27
106568	MKS-KPP36-L28	0	150	1,46	L28
106569	MKS-KPP36-L29	0	160	1,46	L29
106570	MKS-KPP36-L30	0	170	1,46	L30

Part No.	Description	α [°]	β [°]	m [kg]	Master-Mount-No.
103107	MKS-KPP36-R01	0	-	1,46	R01
103108	MKS-KPP36-R02	10	-	1,46	R02
103109	MKS-KPP36-R03	20	-	1,46	R03
103110	MKS-KPP36-R04	30	-	1,46	R04
103111	MKS-KPP36-R05	40	-	1,46	R05
103112	MKS-KPP36-R06	50	-	1,46	R06
103113	MKS-KPP36-R07	130	-	1,46	R07
103114	MKS-KPP36-R08	140	-	1,46	R08
103115	MKS-KPP36-R09	150	-	1,46	R09
103116	MKS-KPP36-R10	160	-	1,46	R10
103117	MKS-KPP36-R11	170	-	1,46	R11
103118	MKS-KPP36-R12	180	-	1,46	R12
103119	MKS-KPP36-R13	190	-	1,46	R13
103120	MKS-KPP36-R14	200	-	1,46	R14
103121	MKS-KPP36-R15	210	-	1,46	R15
103122	MKS-KPP36-R16	220	-	1,46	R16
103123	MKS-KPP36-R17	230	-	1,46	R17
103124	MKS-KPP36-R18	310	-	1,46	R18
103125	MKS-KPP36-R19	320	-	1,46	R19
104059	MKS-KPP36-R20	330	-	1,46	R20
104060	MKS-KPP36-R21	340	-	1,46	R21
104061	MKS-KPP36-R22	350	-	1,46	R22
104073	MKS-KPP36-R23	0	30	1,46	R23
104074	MKS-KPP36-R24	10	40	1,46	R24
104075	MKS-KPP36-R25	20	50	1,46	R25
106561	MKS-KPP36-R26	0	130	1,46	R26
106562	MKS-KPP36-R27	0	140	1,46	R27
106563	MKS-KPP36-R28	0	150	1,46	R28
106564	MKS-KPP36-R29	0	160	1,46	R29
106565	MKS-KPP36-R30	0	170	1,46	R30

2-Channel-Coupling (fixed side)

Description	Part No.
MKS-KPP49-X	see table

Type: 2-Kanal, without coding, fixed side, with safety catch

Material: material mix

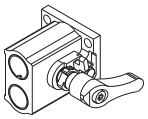

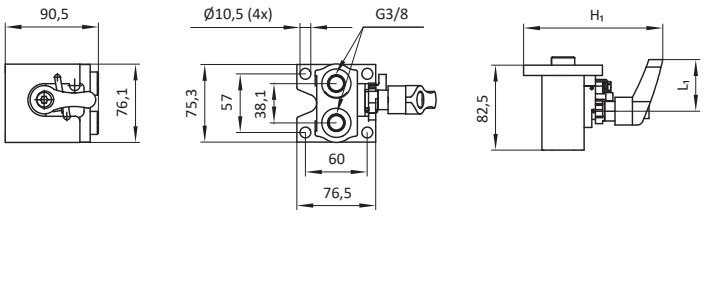

Part No.	Description	H_1 [mm]	L_1 [mm]	m [kg]
105392	MKS-KPP49	142	95	0,76
105393	MKS-KPP49-K	135	50	0,75

Description	Part No.
MKS-KPP49-1-X	see table

Type: 2-Kanal, without coding, fixed side, with safety catch

Material: material mix

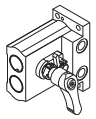

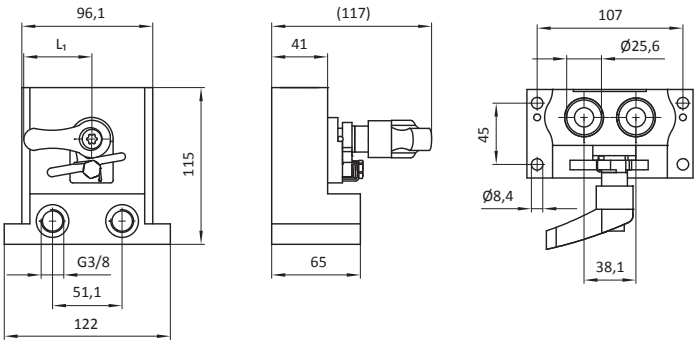

Part No.	Description	L_1 [mm]	m [kg]
105469	MKS-KPP49-1-K	50	1,37
105468	MKS-KPP49-1	95	1,38

2-Channel-Coupling (accessories for fixed side)

Description	Part No.
MKS-EST41-F	103969

Type: connector for coupling, fixed side

Material: composite

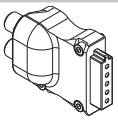

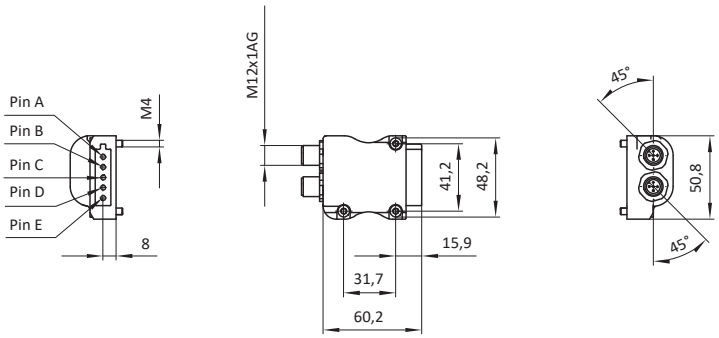

Part No.	Description	Connector 1			Connector 2					m
		Pin A / Pin-no.1	Pin B / Pin-no.3	Pin C / Pin-no.4	Pin A / Pin-no.1	Pin B / Pin-no.3	Pin C	Pin D / Pin-no.4	Pin E / Pin-no.2	[kg]
103969	MKS-EST41-F	brown BN > + 24V	blue BL > - ground	black BK > signal 1	brown BN > + 24V	blue BL > - ground		white WH > signal 2	grey GY > signal 3	0,05

Description	Part No.
MKS-EST28-F	102405

Type: connector for coupling, fixed side

Material: composite

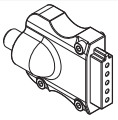

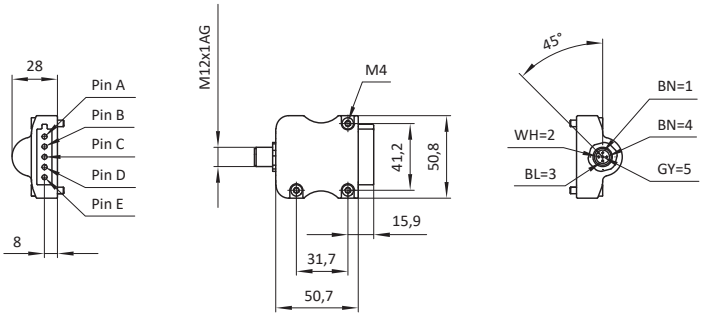

Part No.	Description	Pin A brown	Pin B blue	Pin C black	Pin D white	Pin E grey	m [kg]
102405	MKS-EST28-F	BN > +24V	BL > -ground	BK > component query	WH > forward	GY > back	0,05

Description	Part No.
MKS-MHW06-2	107705

Type: drilling pattern, for even coding, for 2-channel-coupling (fixed side)

Material: steel

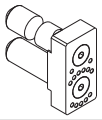

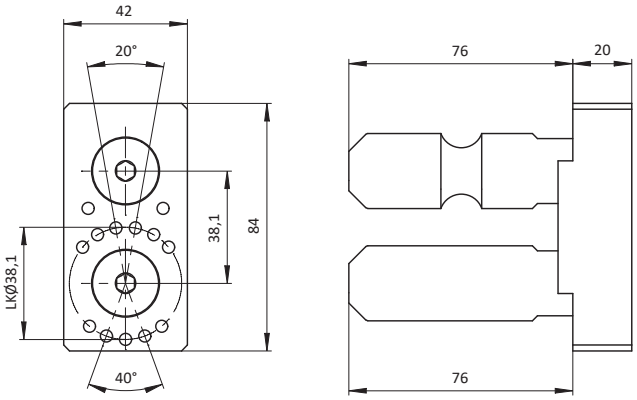

Part No.	Description	m [kg]
107705	MKS-MHW06-2	1,05

2-Channel-Coupling (accessories for fixed side)

Description	Part No.
MKS-MHW06-1	107704

Type: drilling pattern, for odd coding, for 2-channel-coupling (fixed side)

Material: steel

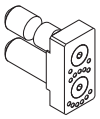

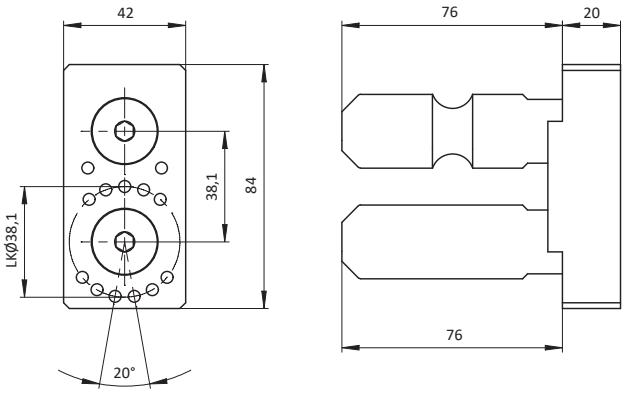

Part No.	Description	m [kg]
107704	MKS-MHW06-1	1,05

2-Channel-Coupling (loose side)

Description	Part No.
MKSXX/XX-GAKPXX-X-XXXX	see table

Type: 2-channel, encodable, loose side

Material: material mix

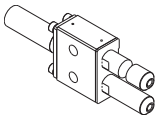

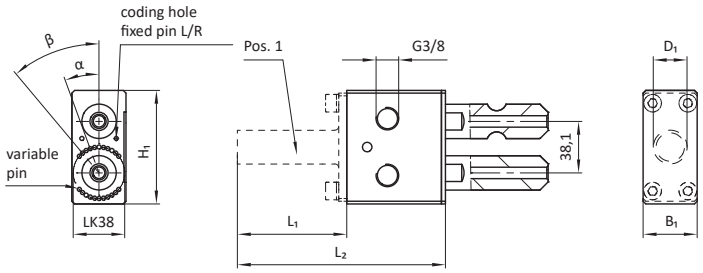

Part No.	Description	D_1 [mm]	H_1 [mm]	B_1 [mm]	L_1 [mm]	L_2 [mm]	Coding hole [α, β]	with assembly possibility for MKS-EST28	m [kg]	Tube with flange [Pos. 1]
102687	MKS25-GAKP02-C100	25	80	41	100	175	no	no	1,49	yes
102688	MKS25-GAKP02-C150	25	80	41	150	225	no	no	1,55	yes
102689	MKS25-GAKP02-C200	25	80	41	200	275	no	no	1,61	yes
102690	MKS25-GAKP02-C300	25	80	41	300	375	no	no	1,73	yes
102691	MKS25-GAKP02-C400	25	80	41	400	475	no	no	1,85	yes
102179	MKS25-GAKP02-C500	25	80	41	500	575	no	no	1,95	yes
102725	MKS25-GAKP04-C150	25	84	40	150	223	yes	yes	1,53	yes
102726	MKS25-GAKP04-C200	25	84	40	200	273	yes	yes	1,59	yes
102727	MKS25-GAKP04-C300	25	84	40	300	373	yes	yes	1,7	yes
102728	MKS25-GAKP04-C400	25	84	40	400	473	yes	yes	1,82	yes
102411	MKS25-GAKP04-C500	25	84	40	500	573	yes	yes	1,93	yes
104420	MKS30-GAKP04-3-D100	30	84	40	100	173	no	yes	1,5	yes
104421	MKS30-GAKP04-3-D150	30	84	40	150	223	no	yes	1,58	yes
104422	MKS30-GAKP04-3-D200	30	84	40	200	273	no	yes	1,65	yes
104423	MKS30-GAKP04-3-D300	30	84	40	300	373	no	yes	1,79	yes
104424	MKS30-GAKP04-3-D400	30	84	40	400	473	no	yes	1,94	yes
104425	MKS30-GAKP04-3-D500	30	84	40	500	573	no	yes	2,08	yes
103090	MKS40/25-GAKP04	36	84	40	46	119	yes	yes	1,54	yes
107498	MKS40/25-GAKP04-LB	-	80	40	-	-	no	no	1,45	no

Description	Part No.
MKS-GAKP05-XX-X-LB	see table

Type: 2-cahnnel, without coding, loose side

Material: material mix

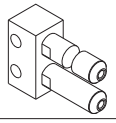

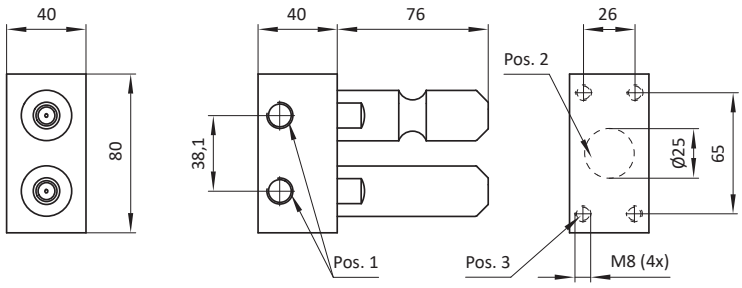

Part No.	Description	m [kg]	Material	Ports [Pos. 1]	Holes Ø 25 mm [Pos. 2]	Thread M8 (4x) [Pos. 3]
106813	MKS-GAKP05-LB	1,42	steel	G1/4	yes	no
106815	MKS-GAKP05-1-LB	1,53	steel	no	yes	no
106816	MKS-GAKP05-AL-1-LB	0,96	aluminium	no	no	yes
107168	MKS-GAKP05-AL-2-LB	0,85	aluminium	G3/8	no	yes
106814	MKS-GAKP05-AL-LB	0,86	aluminium	G1/4	no	yes

2-Channel-Coupling (loose side)

Description	Part No.
MKS-GAKP0X-XXX	see table

Type: 2-channel, encodable, loose side

Material: material mix

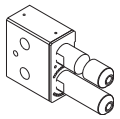

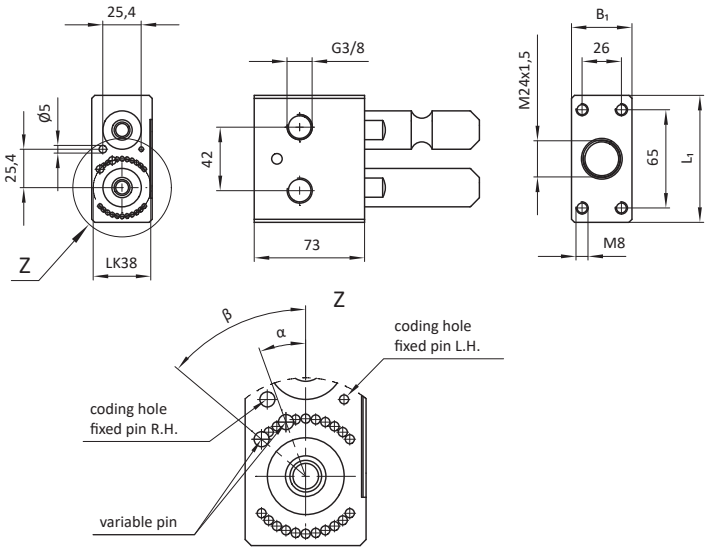

Part No.	Description	B_1 [mm]	L_1 [mm]	α [°]	β [°]	m [kg]
102259	MKS-GAKP02	41	80	-	-	1,17
102410	MKS-GAKP04	41	84	-	-	1,21
104189	MKS-GAKP04-3	41	84	-	-	1,22
105297	MKS-GAKP04-L01	41	84	0	-	1,20
105298	MKS-GAKP04-L02	41	84	10	-	1,20
105299	MKS-GAKP04-L03	41	84	20	-	1,20
105300	MKS-GAKP04-L04	41	84	30	-	1,20
105301	MKS-GAKP04-L05	41	84	40	-	1,20
105302	MKS-GAKP04-L06	41	84	50	-	1,20
105303	MKS-GAKP04-L07	41	84	130	-	1,20
105304	MKS-GAKP04-L08	41	84	140	-	1,20
105305	MKS-GAKP04-L09	41	84	150	-	1,20
105306	MKS-GAKP04-L10	41	84	160	-	1,20
105307	MKS-GAKP04-L11	41	84	170	-	1,20
105308	MKS-GAKP04-L12	41	84	180	-	1,20
105309	MKS-GAKP04-L13	41	84	190	-	1,20
105310	MKS-GAKP04-L14	41	84	200	-	1,20
105311	MKS-GAKP04-L15	41	84	210	-	1,20
105312	MKS-GAKP04-L16	41	84	220	-	1,20
105313	MKS-GAKP04-L17	41	84	230	-	1,20
105314	MKS-GAKP04-L18	41	84	310	-	1,20
105315	MKS-GAKP04-L19	41	84	320	-	1,20
105316	MKS-GAKP04-L20	41	84	330	-	1,20
105317	MKS-GAKP04-L21	41	84	340	-	1,20
105318	MKS-GAKP04-L22	41	84	350	-	1,20
105331	MKS-GAKP04-L23	41	84	0	30	1,20
105332	MKS-GAKP04-L24	41	84	10	40	1,20

Part No.	Description	B_1 [mm]	L_1 [mm]	α [°]	β [°]	m [kg]
105333	MKS-GAKP04-L25	41	84	20	50	1,20
105275	MKS-GAKP04-R01	41	84	0	-	1,20
105276	MKS-GAKP04-R02	41	84	10	-	1,20
105277	MKS-GAKP04-R03	41	84	20	-	1,20
105278	MKS-GAKP04-R04	41	84	30	-	1,20
105279	MKS-GAKP04-R05	41	84	40	-	1,20
105280	MKS-GAKP04-R06	41	84	50	-	1,20
105281	MKS-GAKP04-R07	41	84	130	-	1,20
105282	MKS-GAKP04-R08	41	84	140	-	1,20
105283	MKS-GAKP04-R09	41	84	150	-	1,20
105284	MKS-GAKP04-R10	41	84	160	-	1,20
105285	MKS-GAKP04-R11	41	84	170	-	1,20
105286	MKS-GAKP04-R12	41	84	180	-	1,20
105287	MKS-GAKP04-R13	41	84	190	-	1,20
105288	MKS-GAKP04-R14	41	84	200	-	1,20
105289	MKS-GAKP04-R15	41	84	210	-	1,20
105290	MKS-GAKP04-R16	41	84	220	-	1,20
105291	MKS-GAKP04-R17	41	84	230	-	1,20
105292	MKS-GAKP04-R18	41	84	310	-	1,20
105293	MKS-GAKP04-R19	41	84	320	-	1,20
105294	MKS-GAKP04-R20	41	84	330	-	1,20
105295	MKS-GAKP04-R21	41	84	340	-	1,20
105296	MKS-GAKP04-R22	41	84	350	-	1,20
105228	MKS-GAKP04-R23	41	84	0	30	1,20
105329	MKS-GAKP04-R24	41	84	10	40	1,20
105330	MKS-GAKP04-R25	41	84	20	50	1,20

2-Channel-Coupling (loose side)

Description	Part No.
MKS-GAKP05-2-LB	107670

Type: 2-Kanal, without coding, loose side

Material: material mix

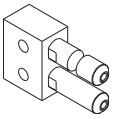

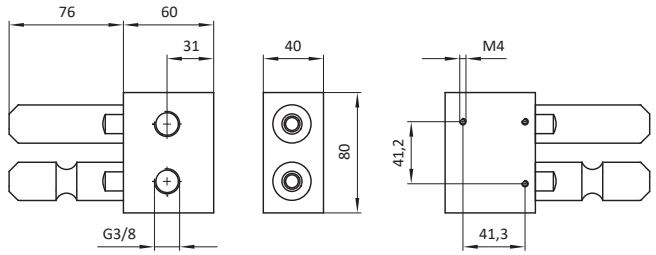

Part No.	Description	m [kg]
107670	MKS-GAKP05-2-LB	1,89

Description	Part No.
MKS-GAK04-X2	107047

Type: 2-Kanal, encodable, loose side

Material: material mix

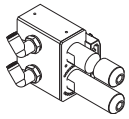

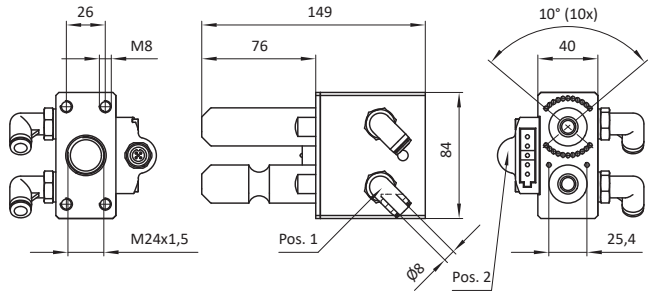

Part No.	Description	m [kg]	Ports [Pos. 1]	Connector MKS-EST28-L [Pos. 2]
107047	MKS-GAKP04-X2	1,24	Ø 8 mm (2x)	yes

2-Channel-Coupling (accessories for loose side)

Description	Part No.
MKSXX-GRA02-CXXX	see table

Type: for 2-channel-coupling, loose side

Material: steel

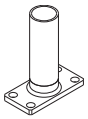

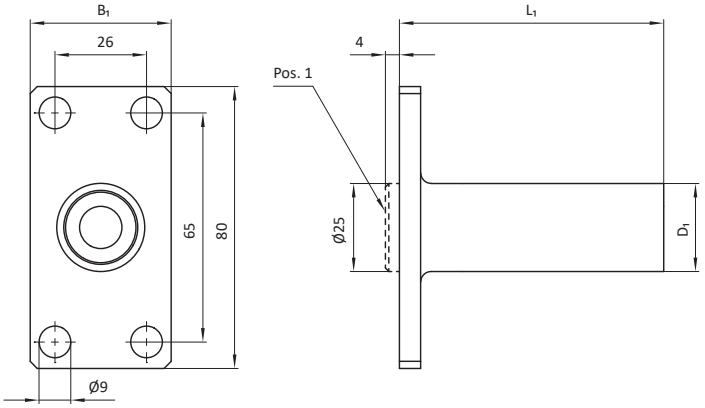

Part No.	Description	B1 [mm]	D1 [mm]	L1 [mm]	Centring [Pos. 1]	m [kg]
111622	MKS25-GRA26-C100	40	25	100	no	0,23
111623	MKS25-GRA26-C150	40	25	150	no	0,29
111624	MKS25-GRA26-C200	40	25	200	no	0,34
108313	MKS25-GRA26-C300	40	25	300	no	0,46
111625	MKS25-GRA26-C400	40	25	400	no	0,57
107763	MKS25-GRA26-C500	40	25	500	no	0,68
103989	MKS30-GRA02-C100	41	30	100	yes	0,28
103990	MKS30-GRA02-C150	41	30	150	yes	0,35
103991	MKS30-GRA02-C200	41	30	200	yes	0,42
103992	MKS30-GRA02-C300	41	30	300	yes	0,56
103993	MKS30-GRA02-C400	41	30	400	yes	0,70
103994	MKS30-GRA02-C500	41	30	500	yes	0,84

Description	Part No.
MKS-EST28-L	102404

Type: connector for coupling, loose side

Material: composite

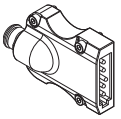

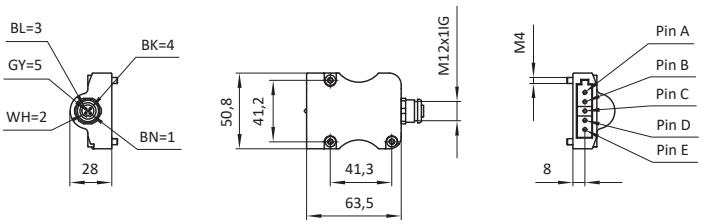

Part No.	Description	Pin A brown	Pin B blue	Pin C black	Pin D white	Pin E grey	m [kg]
102404	MKS-EST28-L	BN > +24V	BL > -ground	BK > component query	WH > forward	GY > back	0,05

Description	Part No.
MKS-MHW05-2	107674

Type: drilling pattern, for even coding, for 2-channel-coupling (loose side)

Material: steel



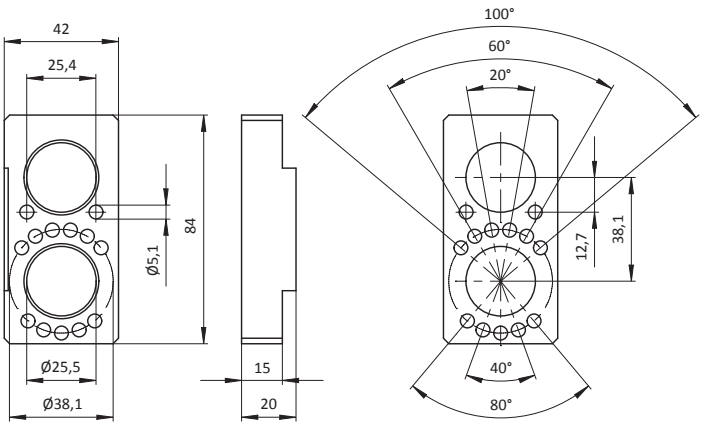

Part No.	Description	m [kg]
107674	MKS-MHW05-2	0,30

Description	Part No.
MKS-MHW05-1	107673

Type: drilling pattern, for odd coding, for 2-channel-coupling (loose side)

Material: steel

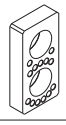

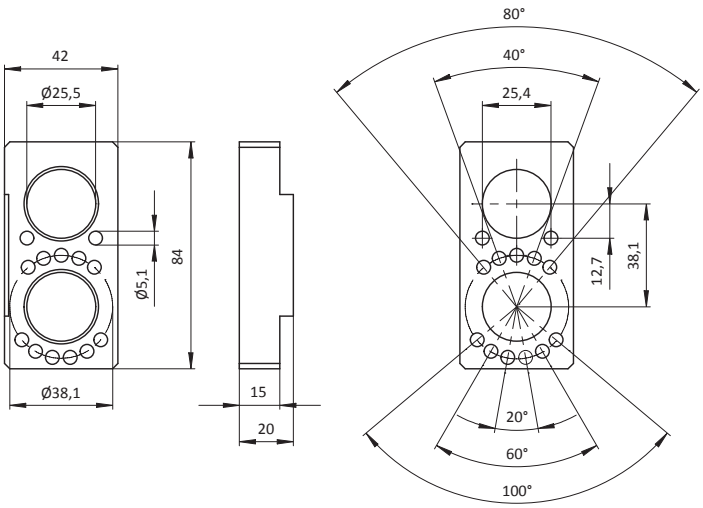

Part No.	Description	m [kg]
107673	MKS-MHW05-1	0,30

Bayonet Coupling (fixed side)

Description	Part No.
MKS-KPP48-F	106717

Type: bayonet, fixed side

Material: material mix

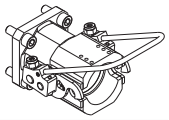

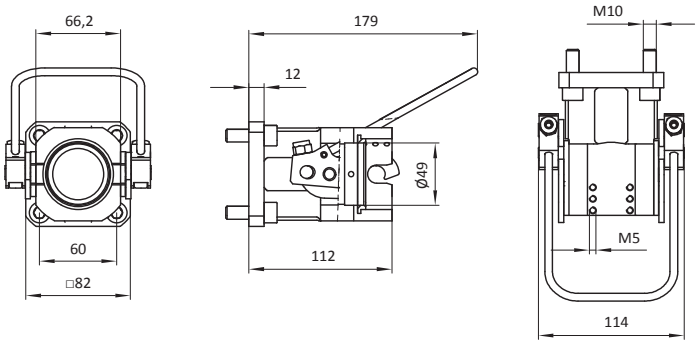

Part No.	Description	m [kg]
106717	MKS-KPP48-F	1,43

Bayonet Coupling (accessories for fixed side)

Description	Part No.
MKS60-KS18	103875

Type: mounting for two bayonet couplings on tube Ø60mm

Material: aluminium

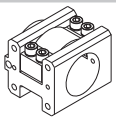

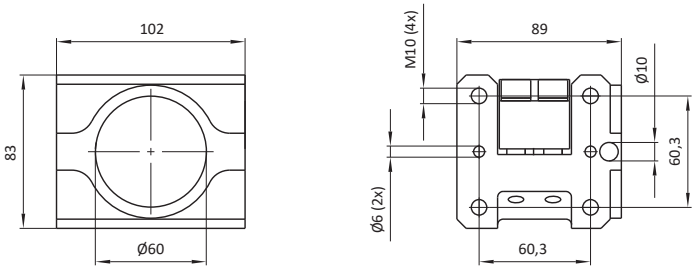

Part No.	Description	m [kg]
103875	MKS60-KS18	1,09

Description	Part No.
MKS-KPP51-F-X-XX	see table

Type: bridge, for air transmission, for KPP48

Material: material mix

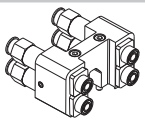

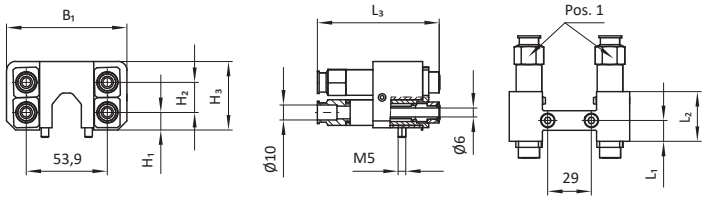

Part No.	Description	H_1 [mm]	H_2 [mm]	H_3 [mm]	B_1 [mm]	L_1 [mm]	L_2 [mm]	L_3 [mm]	m [kg]	Ports [Pos. 1]
105555	MKS-KPP51-F-O-4A	11,6	20	45,5	80	13,8	33	81	0,50	Ø 10 mm (4x)
105554	MKS-KPP51-F-O-2A	11,6	20	45,5	80	13,8	33	83	0,50	Ø 10 mm (2x)
106526	MKS-KPP51-F-M-2A	11,6	20	45,5	80	13,8	33	83	0,50	Ø 10 mm (2x)
106527	MKS-KPP51-F-M-4A	11,6	20	45,5	80	13,8	33	81	0,50	Ø 10 mm (4x)
106573	MKS-KPP51-F-O-4B	9,5	15	34	73	17,5	31	62	0,50	Ø 10 mm (4x)

Description	Part No.
MKS-KPP51-1-F-O-8B-XX	see table

Type: port/connector extension, for bayonet coupling fixed side, with special bracket

Material: material mix

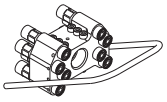

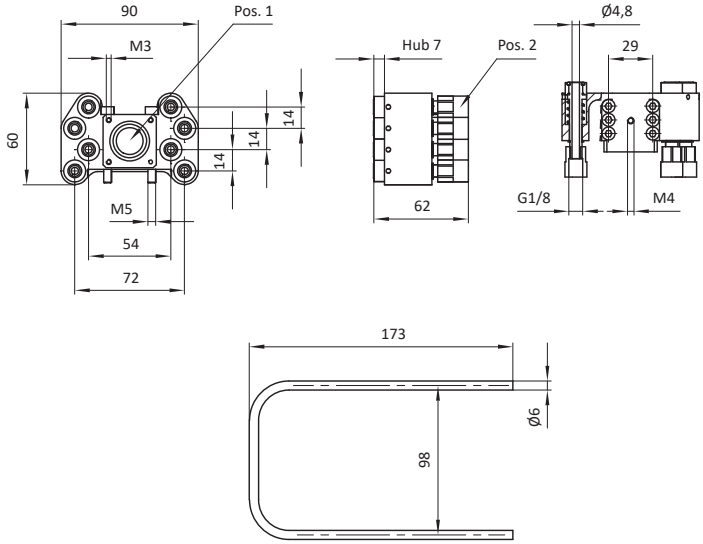

Part No.	Description	Connector [Pos. 1]	m [kg]	Ports [Pos. 2]
107687	MKS-KPP51-1-F-O-8B-9E	yes (9+3 pin)	0,73	G1/8 (8x)
107729	MKS-KPP51-1-F-O-8B	no	0,67	G1/8 (8x)

Description	Part No.
MKS-EST34-F	107786

Type: connector for coupling, fixed side

Material: aluminium

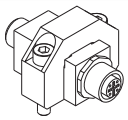

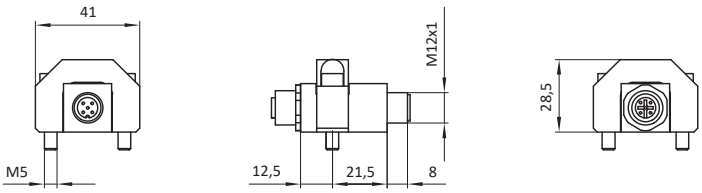

Part No.	Description	m [kg]
107786	MKS-EST34-F	0,55

Bayonet Coupling (loose side)

Description	Part No.
MKS-GAKP26-P-X	see table

Type: bayonet, loose side

Material: material mix

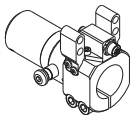

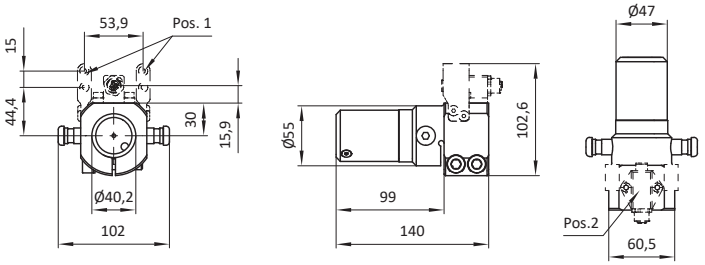

Part No.	Description	Ports [Pos. 1]	Connector MKS-EST34 [Pos. 2]	m [kg]
103057	MKS-GAKP26-P-E	G1/8 (4x)	yes	0,66
104095	MKS-GAKP26-P	G1/8 (4x)	no	0,66

Description	Part No.
MKS-KPP48-1-PE8-G1/8-XX	see table

Type: bayonet, loose side

Material: material mix

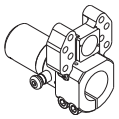

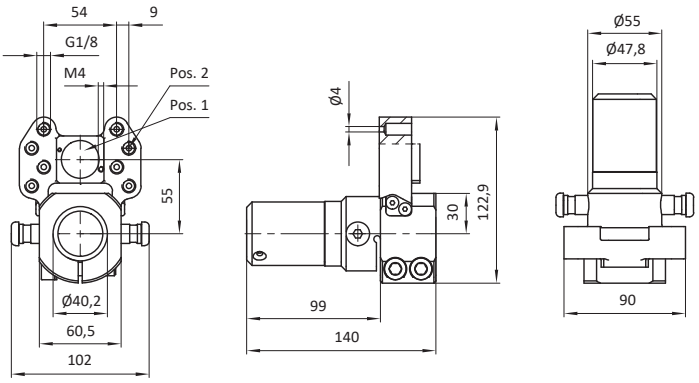

Part No.	Description	Connector [Pos. 1]	m [kg]	Ports [Pos. 2]
107688	MKS-KPP48-1-PE8-G1/8-9E	yes, 9+3 pin	0,86	G1/8 (8x)
107730	MKS-KPP48-1-PE8-G1/8	no	0,78	G1/8 (8x)

Bayonet Coupling (loose side)

Description	Part No.
MKS40-KPP48-PE4-XXX-XXX-XXX	see table

Type: bayonet, encoded, loose side

Material: material mix

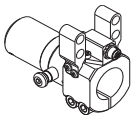

Type coded plate

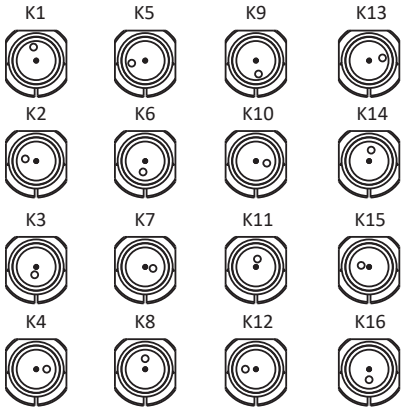

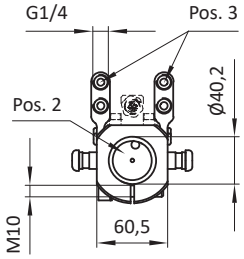

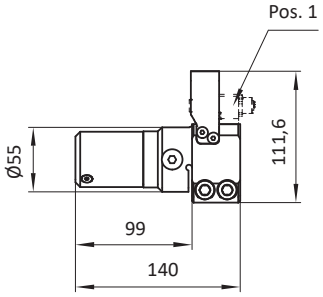

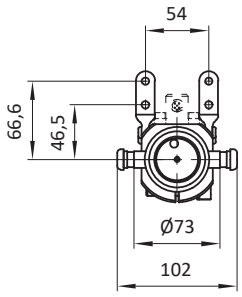

Part No.	Description	Connector MKS-EST34 [Pos. 1]	Coding plate [Pos. 2]	Ports [Pos. 3]	m [kg]
104173	MKS40-KPP48-PE4-K1-G1/4"	no	K1	G1/4 (4x)	0,66
104174	MKS40-KPP48-PE4-K2-G1/4"	no	K2	G1/4 (4x)	0,66
104175	MKS40-KPP48-PE4-K1-EMC-G1/4"	yes	K1	G1/4 (4x)	0,71
104176	MKS40-KPP48-PE4-K2-EMC-G1/4"	yes	K2	G1/4 (4x)	0,72
104177	MKS40-KPP48-PE4-K3-G1/4"	no	K3	G1/4 (4x)	0,66
104178	MKS40-KPP48-PE4-K4-G1/4"	no	K4	G1/4 (4x)	0,66
104179	MKS40-KPP48-PE4-K5-G1/4"	no	K5	G1/4 (4x)	0,66
104180	MKS40-KPP48-PE4-K6-G1/4"	no	K6	G1/4 (4x)	0,67
104181	MKS40-KPP48-PE4-K7-EMC-G1/4"	yes	K7	G1/4 (4x)	0,66
104182	MKS40-KPP48-PE4-K8-EMC-G1/4"	yes	K8	G1/4 (4x)	0,66
104183	MKS40-KPP48-PE4-K9-EMC-G1/4"	yes	K9	G1/4 (4x)	0,66
104184	MKS40-KPP48-PE4-K10-EMC-G1/4"	yes	K10	G1/4 (4x)	0,66
104185	MKS40-KPP48-PE4-K11-EMC-G1/4"	yes	K11	G1/4 (4x)	0,66
104186	MKS40-KPP48-PE4-K12-EMC-G1/4"	yes	K12	G1/4 (4x)	0,66
104187	MKS40-KPP48-PE4-K13-EMC-G1/4"	yes	K13	G1/4 (4x)	0,66
104188	MKS40-KPP48-PE4-K14-EMC-G1/4"	yes	K14	G1/4 (4x)	0,66
105053	MKS40-KPP48-PE4-K3-EMC-G1/4"	yes	K3	G1/4 (4x)	0,66
105054	MKS40-KPP48-PE4-K4-EMC-G1/4"	yes	K4	G1/4 (4x)	0,72
105055	MKS40-KPP48-PE4-K5-EMC-G1/4"	yes	K5	G1/4 (4x)	0,66
105056	MKS40-KPP48-PE4-K6-EMC-G1/4"	yes	K6	G1/4 (4x)	0,66
106486	MKS40-KPP48-PE4-G1/8	no	no	G1/8 (4x)	0,66
107750	MKS40-KPP48-PE4-G1/4"	no	no	G1/4 (4x)	0,66

Bayonet Coupling (accessories for loose side)

Description	Part No.
MKS-EST34	103066

Type: connector for coupling, loose side

Material: aluminium

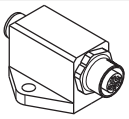

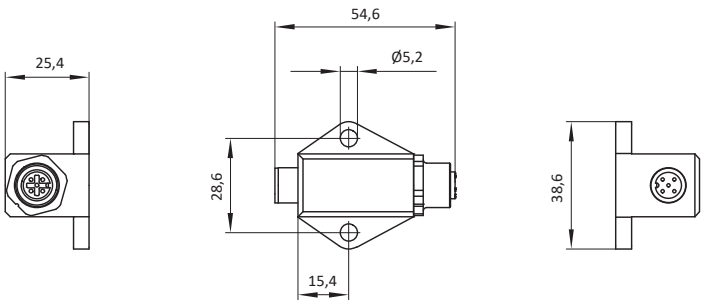

Part No.	Description	m [kg]
103066	MKS-EST34	0,06

Loose Side of Coupling

Description	Part No.
MKS40-KPP43-L	103449

Type: bayonet, loose side

Material: material mix

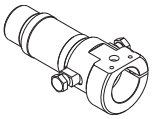

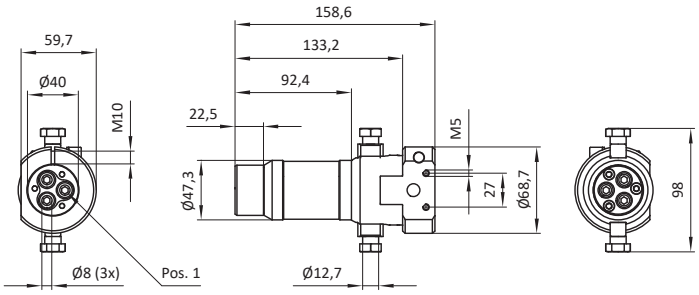

Part No.	Description	m [kg]	Ports [Pos. 1]
103449	MKS40-KPP43-L	0,47	Ø 8 mm (3x)

Description	Part No.
MKS60-KPP28-1-L-P3	104287

Type: bayonet, loose side

Material: material mix

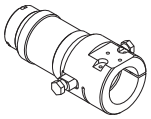

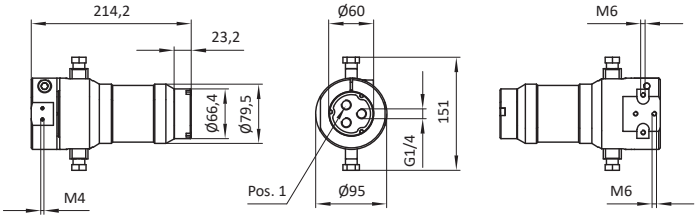

Part No.	Description	m [kg]	Ports [Pos. 1]
104287	MKS60-KPP28-1-L-P3	1,85	G1/4 (3x)

Description	Part No.
MKS60-KPP28-2-L-P3	104701

Type: bayonet, loose side

Material: material mix

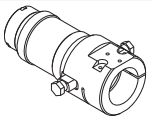

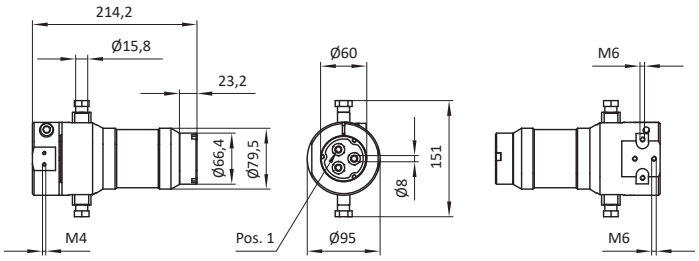

Part No.	Description	m [kg]	Ports [Pos. 1]
104701	MKS60-KPP28-2-L-P3	1,85	Ø 8 mm (3x)

Description	Part No.
MKS60-KPP28-1-L-P6	101960

Type: bayonet, loose side

Material: material mix

Note: Item *70296* (6x) is required for assembly!

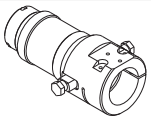

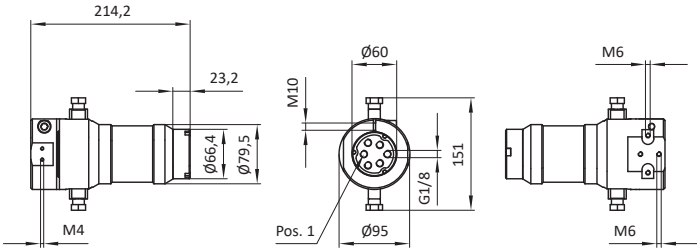

Part No.	Description	m [kg]	Ports [Pos. 1]
101960	MKS60-KPP28-1-L-P6	1,86	G1/8 (6x)

Loose Side of Coupling

Description	Part No.
MKSXX-KPP44	see table

Type: loose side, with clamp seat

Material: aluminium

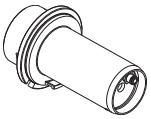

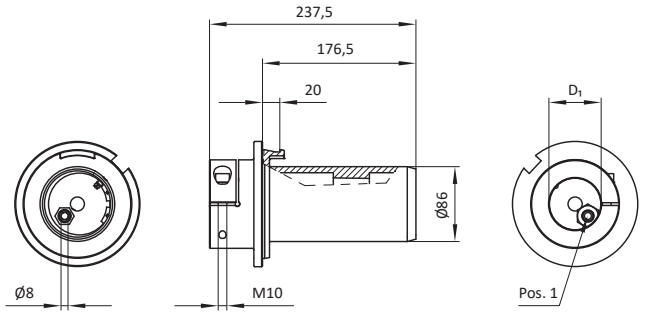

Part No.	Description	D_1 [mm]	m [kg]	Port [Pos. 1]
103490	MKS60-KPP44	60	2,44	G1/4
103491	MKS76-KPP44	76,2	1,36	G1/4

Description	Part No.
MKSXX-KPP44-2	see table

Type: loose side, with clamp

Material: aluminium

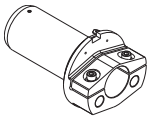

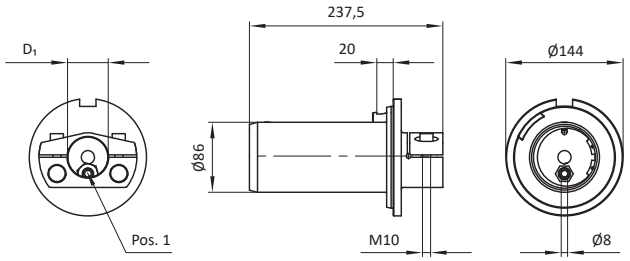

Part No.	Description	D_1 [mm]	m [kg]	Port [Pos. 1]
104135	MKS50-KPP44-2	50	2,69	G1/4
103511	MKS60-KPP44-2	60	2,81	G1/4
103507	MKS76-KPP44-2	76,2	2,29	G1/4

Description	Part No.
MKS76-KPP41-1	103504

Type: loose side, with clamp seat shared

Material: aluminium

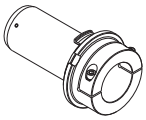

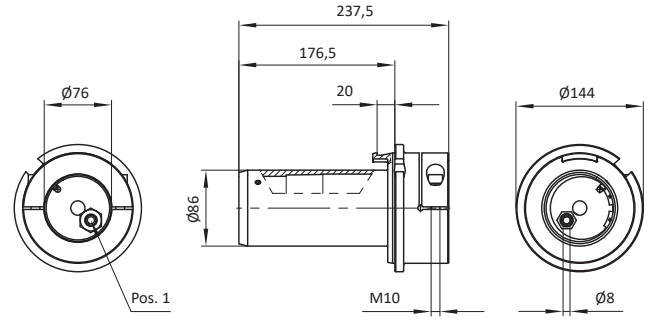

Part No.	Description	m [kg]	Port [Pos. 1]
103504	MKS76-KPP44-1	2,37	G1/4

Description	Part No.
MKS60-SKP02-T	15705

Type: loose side, with clamp seat shared

Material: aluminium

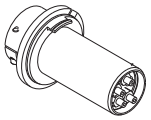

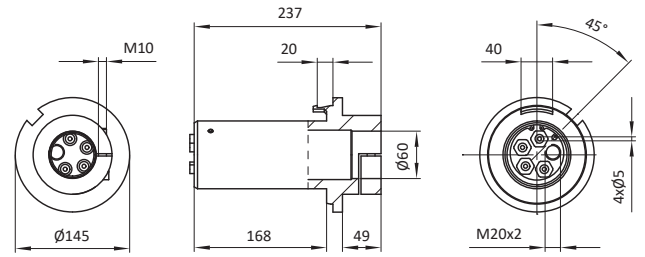

Part No.	Description	m [kg]
15705	MKS60-SKP02-T	2,36

Description	Part No.
MKS60-KPP44-3-L	108020

Type: for robot, loose side

Material: aluminium

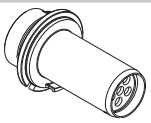

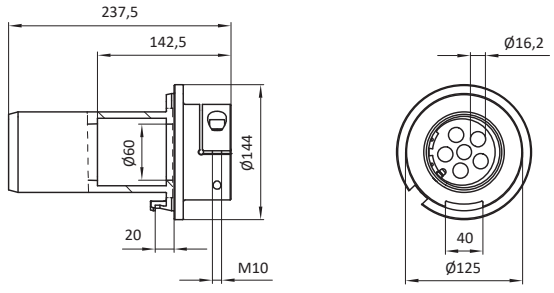

Part No.	Description	m [kg]
108020	MKS60-KPP44-3-L	2,30

Robot Quick-Release Coupling (fixed side)

Description	Part No.
MKS60-SKP01-2-X-XX	see table

Type: for robot, fixed side

Material: material mix

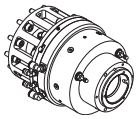

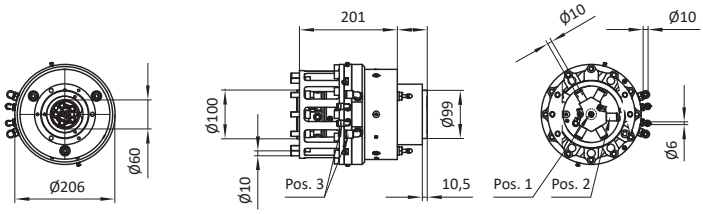

Part No.	Description	Connector [Pos. 1]	m [kg]	Ports [Pos. 2]	Ports (control) [Pos. 3]
105565	MKS60-SKP01-2	no	13,80	Ø 10 mm (5x)	Ø 10 mm (2x), Ø 6 mm (2x)
107642	MKS60-SKP01-2-E	yes (6-pin +PE)	13,81	Ø 10 mm (5x)	Ø 10 mm (2x), Ø 6 mm (2x)
107758	MKS60-SKP01-2-E2	yes (18-pin +PE)	14,00	Ø 10 mm (5x)	Ø 10 mm (2x), Ø 6 mm (2x)

Robot Quick-Release Coupling (accessories for fixed side)

Description	Part No.
MKS-KPP07-F-1	17881

Type: port/connector extension, for robot coupling

Material: material mix



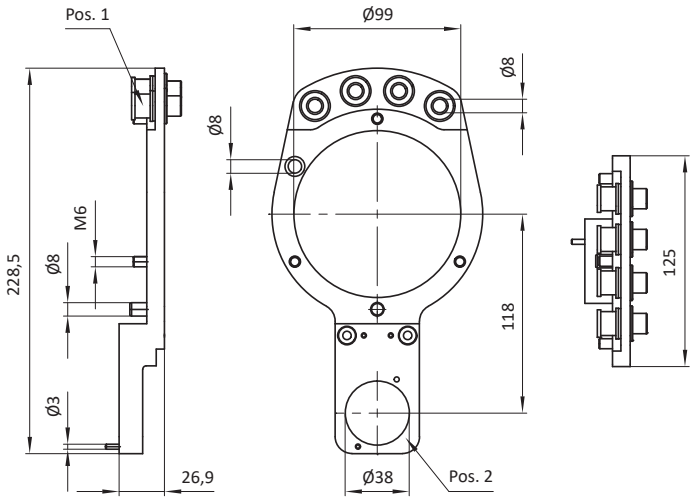

Part No.	Description	m [kg]	Ports [Pos. 1]	Connector mounting [Pos. 2]
17881	MKS-KPP07-F-1	0,44	Ø 8 mm (4x)	yes

Robot Quick-Release Coupling (loose side)

Description	Part No.
MKS60-GRA20-EXXXX	see table

Type: for robot, loose side

Material: material mix

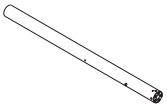

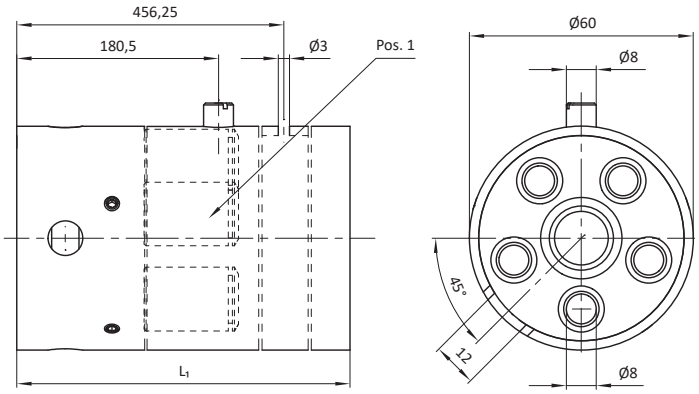

Part No.	Description	L_1 [mm]	m [kg]	Ports [Pos. 1]
105578	MKS60-GRA20-E1000	1000	4,80	Ø 10 mm (5x)
105695	MKS60-GRA20-E1100	1100	5,22	Ø 10 mm (5x)
105696	MKS60-GRA20-E1200	1200	5,64	Ø 10 mm (5x)
105697	MKS60-GRA20-E1300	1300	6,07	Ø 10 mm (5x)
105698	MKS60-GRA20-E1400	1400	6,48	Ø 10 mm (5x)
105699	MKS60-GRA20-E1500	1500	6,91	Ø 10 mm (5x)

Description	Part No.
MKS60-GRA05-X-XXXX	see table

Type: for robot, loose side

Material: material mix

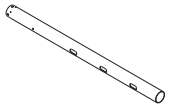

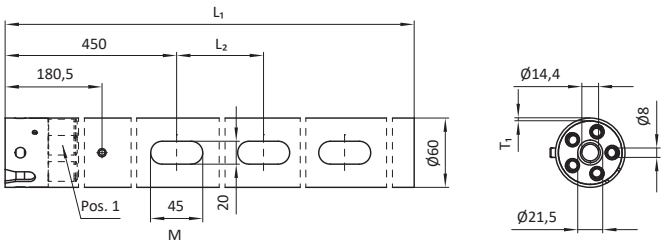

Part No.	Description	L_1 [mm]	L_2 [mm]	T_1 [mm]	M [number]	Ports [Pos. 1]
100211	MKS60-GRA05-E1000	1000	2	3	3	Ø 10 mm (5x)
100212	MKS60-GRA05-E1100	1100	2	3	3	Ø 10 mm (5x)
100213	MKS60-GRA05-E1200	1200	3	3	4	Ø 10 mm (5x)
100214	MKS60-GRA05-E1300	1300	3	3	4	Ø 10 mm (5x)
100215	MKS60-GRA05-E1400	1400	4	3	5	Ø 10 mm (5x)
100216	MKS60-GRA05-E1500	1500	4	3	5	Ø 10 mm (5x)
100217	MKS60-GRA05-E1600	1600	5	3	6	Ø 10 mm (5x)
100218	MKS60-GRA05-E1800	1800	6	3	7	Ø 10 mm (5x)
100219	MKS60-GRA05-E2000	2000	7	3	8	Ø 10 mm (5x)
100220	MKS60-GRA05-E2500	2500	9	3	10	Ø 10 mm (5x)
100221	MKS60-GRA05-E3000	3000	12	3	13	Ø 10 mm (5x)
15425	MKS60-GRA05-1000	1000	2	2,5	3	Ø 10 mm (5x)
17945	MKS60-GRA05-1100	1100	2	2,5	3	Ø 10 mm (5x)
15426	MKS60-GRA05-1200	1200	3	2,5	4	Ø 10 mm (5x)
17946	MKS60-GRA05-1300	1300	3	2,5	4	Ø 10 mm (5x)
15427	MKS60-GRA05-1400	1400	4	2,5	5	Ø 10 mm (5x)
16014	MKS60-GRA05-1500	1500	4	2,5	5	Ø 10 mm (5x)
15428	MKS60-GRA05-1600	1600	5	2,5	6	Ø 10 mm (5x)
15429	MKS60-GRA05-1800	1800	6	2,5	7	Ø 10 mm (5x)
15430	MKS60-GRA05-2000	2000	7	2,5	8	Ø 10 mm (5x)
15431	MKS60-GRA05-2500	2500	9	2,5	10	Ø 10 mm (5x)
15432	MKS60-GRA05-3000	3000	12	2,5	13	Ø 10 mm (5x)

Robot Quick-Release Coupling (loose side)

Description	Part No.
MKS60-PRXX-XXXXX	see table

Type: for robot, loose side

Material: steel

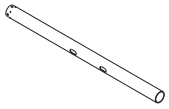

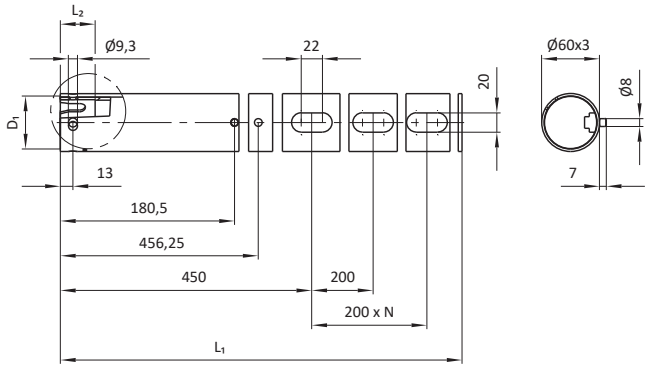

Part No.	Description	D_1 [mm]	L_1 [mm]	L_2 [mm]	m [kg]	N [-]	Number of long holes
100200	MKS60-PR05-E1000	55	1000	36	4,70	2	3
100201	MKS60-PR05-E1100	55	1100	36	4,47	2	3
100202	MKS60-PR05-E1200	55	1200	36	4,95	3	4
100203	MKS60-PR05-E1300	55	1300	36	5,42	3	4
100204	MKS60-PR05-E1400	55	1400	36	5,25	4	5
100205	MKS60-PR05-E1500	55	1500	36	6,21	4	5
100206	MKS60-PR05-E1600	55	1600	36	6,59	5	6
100207	MKS60-PR05-E1800	55	1800	36	8,46	6	7
100208	MKS60-PR05-E2000	55	2000	36	9,40	7	8
100209	MKS60-PR05-E2500	55	2500	36	11,75	9	10
100210	MKS60-PR05-E3000	55	3000	36	14,10	12	13
17289	MKS60-PR05-1000	-	1000	-	4,03	2	3
17300	MKS60-PR05-1100	-	1100	-	4,46	2	3
17290	MKS60-PR05-1200	-	1200	-	4,86	3	4
17301	MKS60-PR05-1300	-	1300	-	5,26	3	4
17291	MKS60-PR05-1400	-	1400	-	5,65	4	5
17212	MKS60-PR05-1500	-	1500	-	6,05	4	5
17292	MKS60-PR05-1600	-	1600	-	6,46	5	6
17293	MKS60-PR05-1800	-	1800	-	7,25	6	7
17213	MKS60-PR05-2000	-	2000	-	8,06	7	8
17294	MKS60-PR05-2500	-	2500	-	10,08	9	10
17295	MKS60-PR05-3000	-	3000	-	12,09	12	13
105682	MKS60-PR12-E1000	55	1000	61	4,20	-	-
105683	MKS60-PR12-E1100	55	1100	61	4,64	-	-
105684	MKS60-PR12-E1200	55	1200	61	5,07	-	-
105685	MKS60-PR12-E1300	55	1300	61	5,49	-	-
105686	MKS60-PR12-E1400	55	1400	61	5,91	-	-
105687	MKS60-PR12-E1500	55	1500	61	6,33	-	-

Robot Quick-Release Coupling (accessories for loose side)

Description	Part No.	Description	Part No.
MKS60-KPP07-L-1	17882	MKS-KPP16-X-XX	see table

Type: port/connector extension, for robot coupling, with clamp seat

Material: material mix

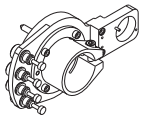

Type: for robot coupling, loose side

Material: material mix

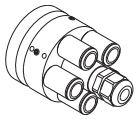

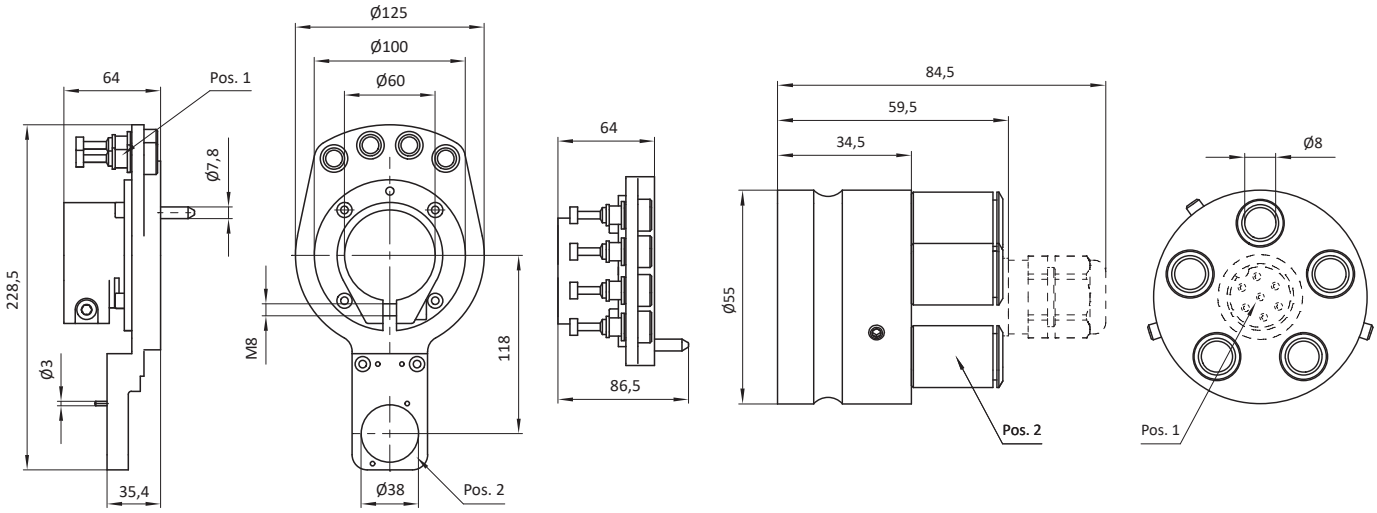

Part No.	Description	m [kg]	Ports [Pos. 1]	Connector mounting [Pos. 2]
17882	MKS60-KPP07-L-1	0,93	Ø 10 mm (4x)	yes

Part No.	Description	Connector [Pos. 1]	m [kg]	Ports [Pos. 2]	Type robot coupling
17296	MKS-KPP16	no	0,62	Ø 10 mm (5x)	for MKS-SKP01
17297	MKS-KPP16-1	no	0,62	Ø 8 mm (5x)	for MKS-SKP01
105694	MKS-KPP16-2	no	0,62	Ø 10 mm (5x)	for MKS-SKP01-2
105577	MKS-KPP16-2-E	yes (6-pin + PE)	0,62	Ø 10 mm (5x)	for MKS-SKP01-2
107760	MKS-KPP16-2-E2	yes (18-pin + PE)	0,62	Ø 10 mm (5x)	for MKS-SKP01-2

Robot Coupling (fixed and loose side)

Description	Part No.
MKS-SKP03-200-R	15729

Type: quick-change coupling, fixed side

Material: steel

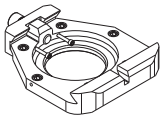

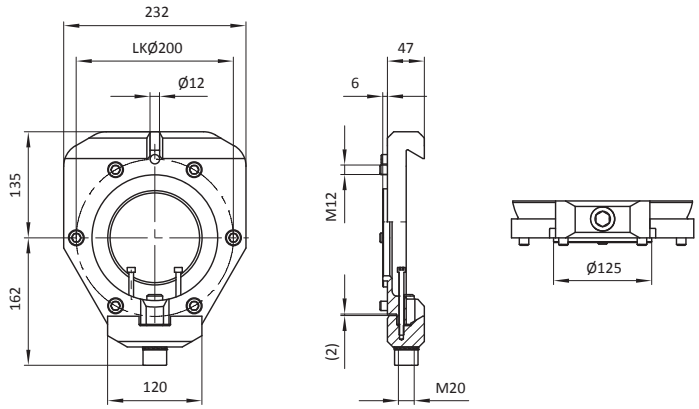

Part No.	Description	
15729	MKS-SKP03-200-R	

Description	Part No.
MKS-SKP08-200-R	100483

Type: quick-change coupling, fixed side

Material: steel

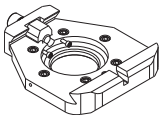

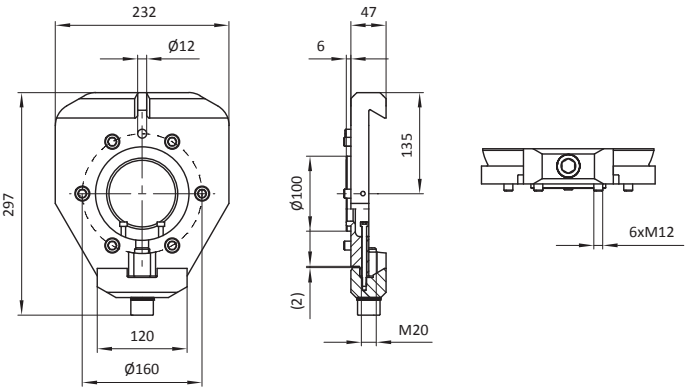

Part No.	Description	m [kg]
100483	MKS-SKP08-200-R	9,20

Description	Part No.
MKS-SKP03-200-T	15728

Type: quick-change coupling, loose side

Material: steel

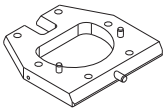

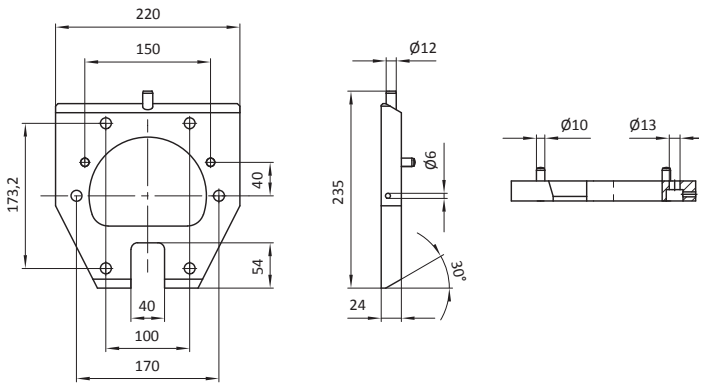

Part No.	Description
15728	MKS-SKP03-200-T

Robot Coupling (fixed and loose side)

Description	Part No.
MKS-SKP03-125-R	15708

Type: quick-change coupling, fixed side

Material: steel

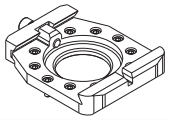

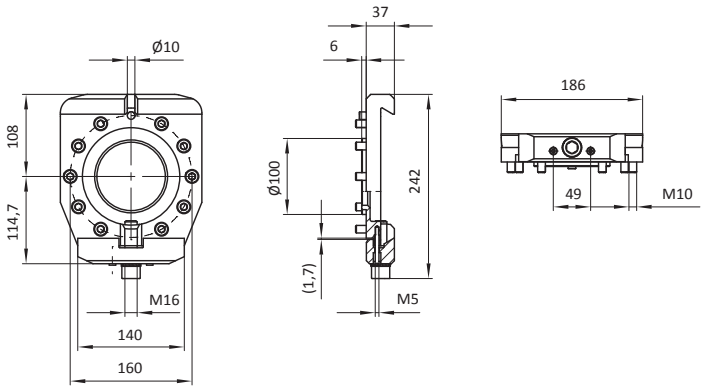

Part No.	Description	m [kg]
15708	MKS-SKP03-125-R	5,20

Description	Part No.
MKS-SKP03-125-T	15707

Type: quick-change coupling, loose side

Material: steel

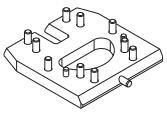

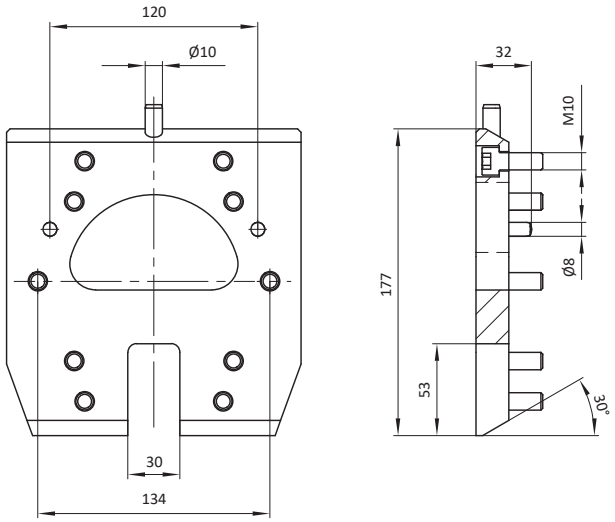

Part No.	Description	m [kg]
15707	MKS-SKP03-125-T	2,55

4-Channel-Coupling (loose side)

Description	Part No.
MKS50-KP4-KAR	103438

Type: 4-channel, with clamp seat, loose side

Material: material mix

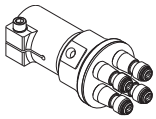

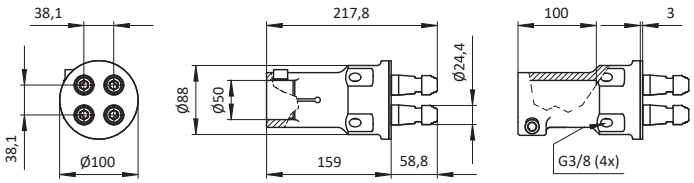

Part No.	Description	m [kg]
103438	MKS50-KP4-KAR	2,33

Description	Part No.
MKS-KP4X	see table

Type: 4-channel, loose side

Material: steel

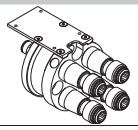

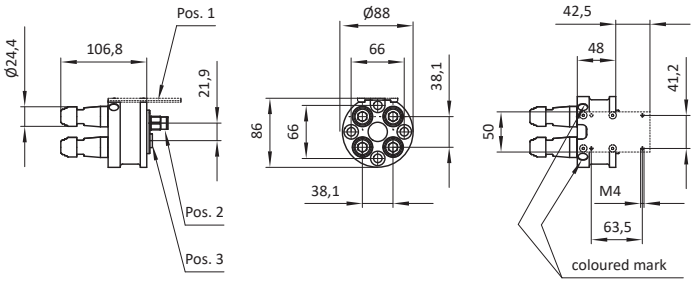

Part No.	Description	m [kg]	Assembly plate, for Connector [Pos. 1]	Ports [Pos. 2, Pos. 3]
11116	MKS-KP4	2,25	no	Ø 10 mm (2x), blind plug (2x)
11115	MKS-KP4E	2,35	yes	Ø 10 mm (2x), blind plug (2x)

Description	Part No.
MKS-KP4-AL	105273

Type: 4-channel, loose side

Material: material mix

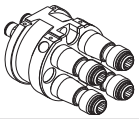

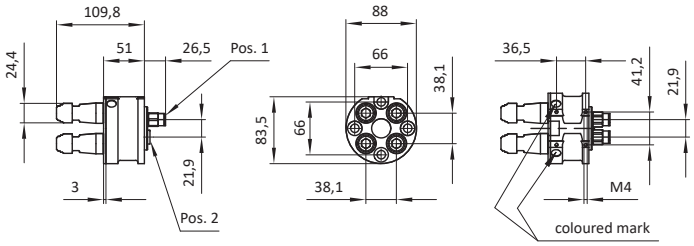

Part No.	Description	m [kg]	Ports [Pos. 1, Pos. 2]
105273	MKS-KP4-AL	1,43	Ø 10 mm (2x), blind plug (2x)

Description	Part No.
MKS-GAKPXX-X-XX	see table

Type: 4-channel, with clamp seat, loose side

Material: material mix

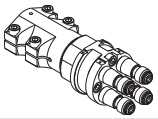

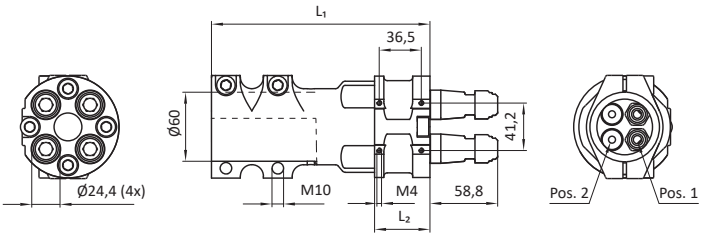

Part No.	Description	L_1 [mm]	L_2 [mm]	m [kg]	Material clamp seat	Ports [Pos. 1, Pos. 2]
15020	MKS60-GAKP17-K	189,5	48	3,98	D	Ø 10 mm (2x), blind plug (2x)
105271	MKS60-GAKP17-K-AL	192,5	51	2,71	A	Ø 10 mm (2x), blind plug (2x)
14600	MKS60-GAKP4-K	215	48	4,06	D	Ø 10 mm (2x), blind plug (2x)

Description	Part No.
MKSXX-GAKP4-LB-XXXX	see table

Type: 4-channel, with tube, light weight design, loose side

Material: material mix

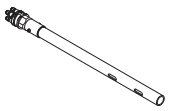

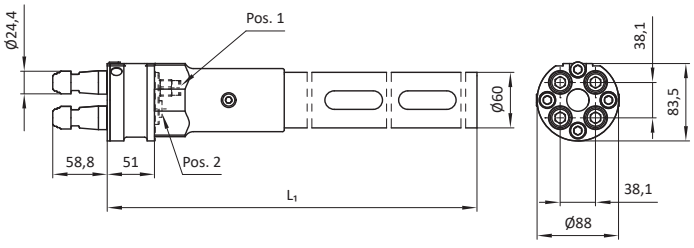

Part No.	Description	L_1 [mm]	m [kg]	Ports [Pos. 1, Pos. 2]
106661	MKS60-GAKP4-LB-1100	1100	4,80	Ø 10 mm (2x), blind plug (2x)
107395	MKS60-GAKP4-LB-1200	1200	5,10	Ø 10 mm (2x), blind plug (2x)

Material
A → aluminium
D → steel

Technical changes and errors are subject to change without notice!
www.springer.group
Document Date: CW 12.2025

Coupling (MKSXX-KPP58-X fixed and loose side)

Description	Part No.
MKS-KPP58-R-P4-X	see table

Type: dovetail, fixed side, with safety catch

Material: material mix

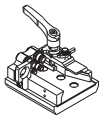

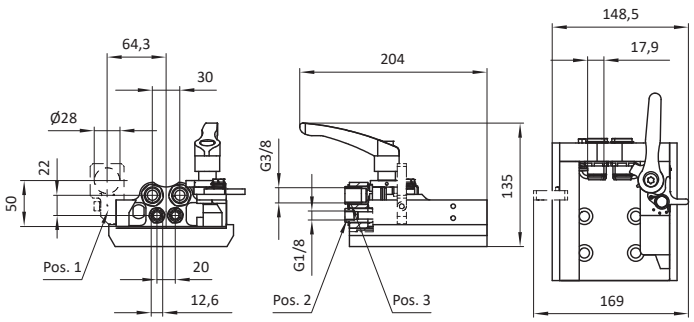

Part No.	Description	m [kg]	Mounting, for connector MKS-EST19-F-6 [Pos. 1]	Ports [Pos. 2] / [Pos. 3]
106828	MKS-KPP58-F-R-P4	2,30	no	G1/8(2x) / G3/8 (2x)
107610	MKS-KPP58-F-R-P4-E	2,85	yes	G1/8(2x) / G3/8 (2x)

Description	Part No.
MKS-KPP58-F-L-P4-X	see table

Type: dovetail, fixed side, with safety catch

Material: material mix

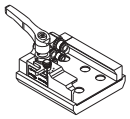

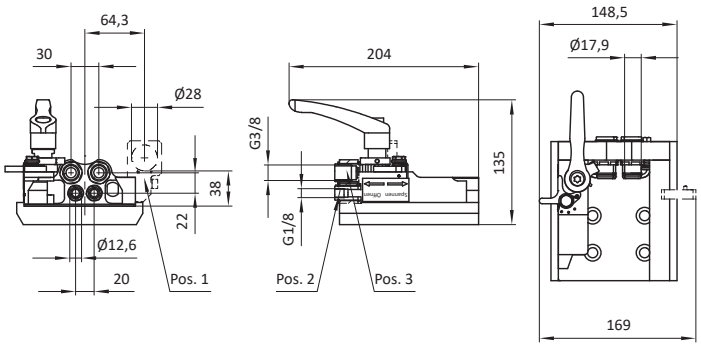

Part No.	Description	m [kg]	Mounting, for connector MKS-EST19-F-6 [Pos. 1]	Ports [Pos. 2] / [Pos. 3]
106827	MKS-KPP58-F-L-P4	2,79	no	G1/8(2x) / G3/8 (2x)
107609	MKS-KPP58-F-L-P4-E	2,85	yes	G1/8(2x) / G3/8 (2x)

Description	Part No.
MKS40-KPP58-2-L-L-P4-X	see table

Type: dovetail, loose side, with tube connection Ø40, left, with clamp seat

Material: material mix

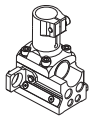

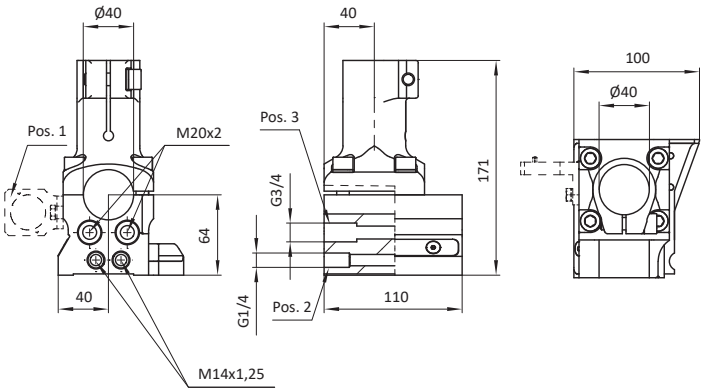

Part No.	Description	Connector mounting [Pos. 1]	m [kg]	Ports [Pos. 2] / [Pos. 3]
107617	MKS40-KPP58-2-L-L-P4-E	yes	1,70	G1/4 (2x) / G3/8 (2x)
106831	MKS40-KPP58-2-L-L-P4	no	1,50	G1/4 (2x) / G3/8 (2x)

Description	Part No.
MKS40-KPP58-2-L-R-P4-X	see table

Type: dovetail, loose side, with seat, with tube connection Ø40, right, with clamp seat

Material: material mix

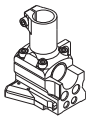

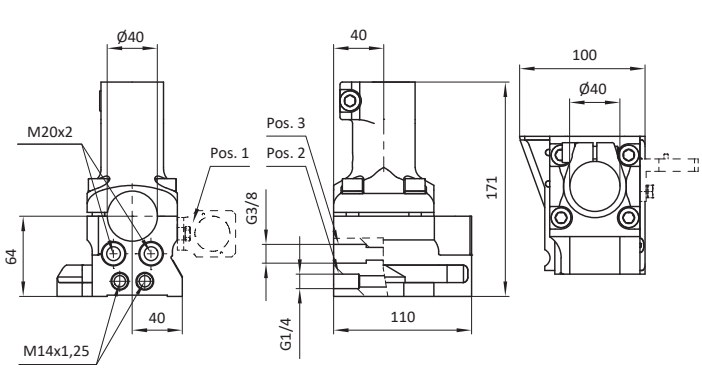

Part No.	Description	Connector mounting [Pos. 1]	m [kg]	Ports [Pos. 2] / [Pos. 3]
107618	MKS40-KPP58-2-L-R-P4-E	yes	1,70	G1/4 (2x) / G3/8 (2x)
106832	MKS40-KPP58-2-L-R-P4	no	1,50	G1/4 (2x) / G3/8 (2x)

Coupling (MKSXX-KPP58-X loose side)

Description	Part No.
MKS40-KPP58-1-L-L-P4-X	see table

Type: dovetail, loose side, with tube connection Ø40, left

Material: material mix

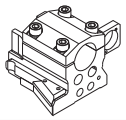

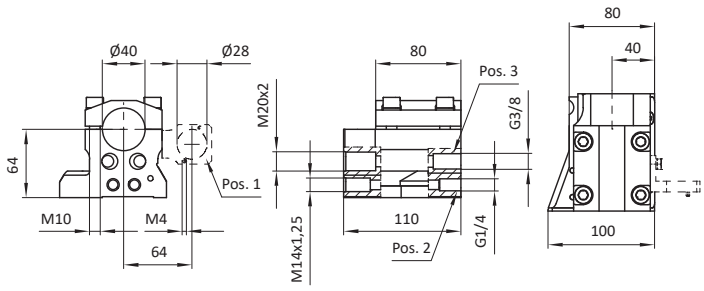

Part No.	Description	Connector mounting [Pos. 1]	m [kg]	Ports [Pos. 2] / [Pos. 3]
106829	MKS40-KPP58-1-L-L-P4	no	1,51	G1/4 (2x) / G3/8 (2x)
107615	MKS40-KPP58-1-L-L-P4-E	yes	1,55	G1/4 (2x) / G3/8 (2x)

Description	Part No.
MKS40-KPP58-1-L-R-P4-X	see table

Type: dovetail, loose side, with tube connection Ø40, right

Material: material mix

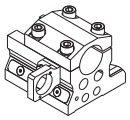

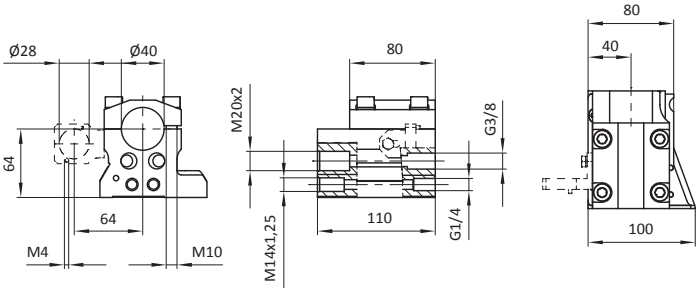

Part No.	Description	Connector mounting [Pos. 1]	m [kg]	Ports [Pos. 2] / [Pos. 3]
106830	MKS40-KPP58-1-L-R-P4	no	1,51	G1/4 (2x) / G3/8 (2x)
107616	MKS40-KPP58-1-L-R-P4-E	yes	1,55	G1/4 (2x) / G3/8 (2x)

Description	Part No.
MKS50x50-KPP58-L-L-P4	106833

Type: dovetail, loose side, with seat, for square tube 50x50, left

Material: material mix

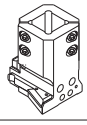

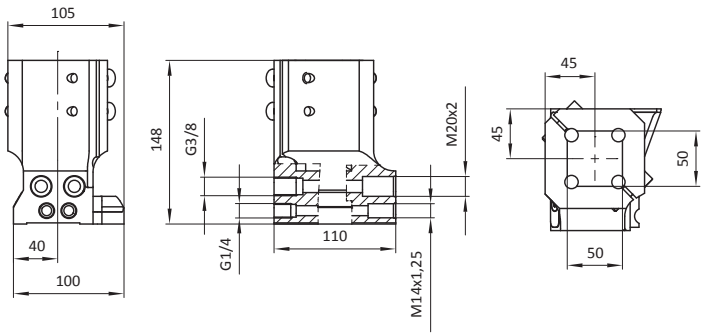

Part No.	Description	m [kg]
106833	MKS50x50-KPP58-L-L-P4	2,40

Description	Part No.
MKS50x50-KPP58-L-R-P4	106834

Type: dovetail, loose side, with seat, for square tube 50x50, right

Material: material mix

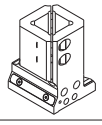

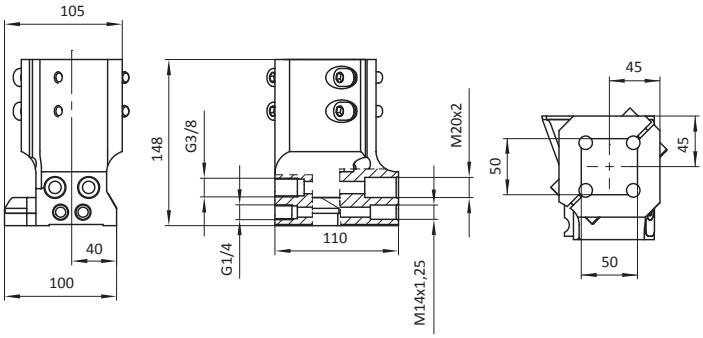

Part No.	Description	m [kg]
106834	MKS50x50-KPP58-L-R-P4	2,40

Coupling (MKS-KPP58-X accessories for loose side)

Description	Part No.
MKS-ZKPP06	107611

Type: connector mounting, for dovetail coupling (loose side, right und left)

Material: material mix

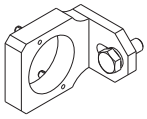

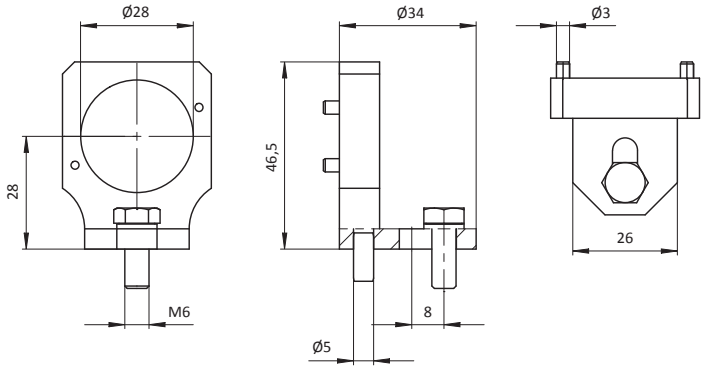

Part No.	Description	m [kg]
107611	MKS-ZKPP06	0,04

Coupling (MKSXX-KPP52-X fixed and loose side)

Description	Part No.
MKS-KPP52-F-L-P/X-X	see table

Type: dovetail, fixed side, with locking slide

Material: material mix

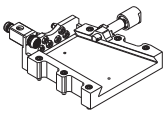

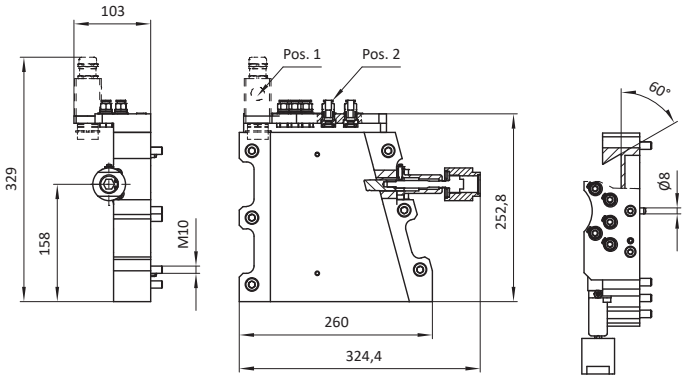

Part No.	Description	Connector [Pos. 1]	m [kg]	Ports [Pos. 2]
107031	MKS-KPP52-F-L-P-1	no	4,40	Ø 8 mm (6x)
107027	MKS-KPP52-F-L-P/E-1	yes (18-pole+PE)	4,70	Ø 8 mm (6x)
106340	MKS-KPP52-F-L-P	no	4,40	Ø 10 mm (6x)
106281	MKS-KPP52-F-L-P/E	yes (18-pole+PE)	4,70	Ø 10 mm (6x)

Description	Part No.
MKS-KPP52-F-R-P/X-X	see table

Type: dovetail, fixed side, with locking slide

Material: material mix

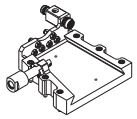

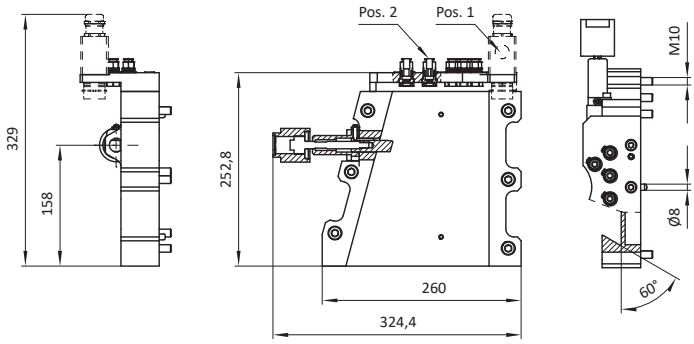

Part No.	Description	Connector [Pos 1]	m [kg]	Ports [Pos. 2]
107032	MKS-KPP52-F-R-P-1	no	4,40	Ø 8 mm (6x)
107028	MKS-KPP52-F-R-P/E-1	yes (18-pole+PE)	4,70	Ø 8 mm (6x)
106341	MKS-KPP52-F-R-P	no	4,40	Ø 10 mm (6x)
106282	MKS-KPP52-F-R-P/E	yes (18-pole+PE)	4,70	Ø 10 mm (6x)

Description	Part No.
MKS60/30-KPP52-L-L-P/X	see table

Type: dovetail, loose side, with tube connection Ø60, left

Material: material mix

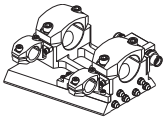

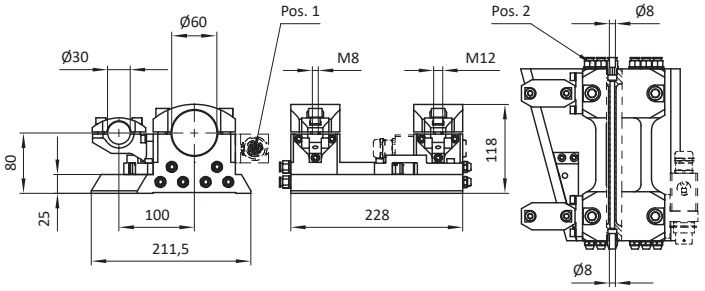

Part No.	Description	Connector [Pos. 1]	m [kg]	Ports [Pos. 2]
107029	MKS60/30-KPP52-L-L-P/E-1	yes (18-pin+PE)	6,50	Ø 8 mm (6x)
106283	MKS60/30-KPP52-L-L-P/E	yes (18-pin+PE)	6,50	Ø 10 mm (6x)
106342	MKS60/30-KPP52-L-L-P	no	6,20	Ø 10 mm (6x)
107033	MKS60/30-KPP52-L-L-P-1	no	6,20	Ø 8 mm (6x)

Description	Part No.
MKS60/30-KPP52-L-R-P/X-X	see table

Type: dovetail, loose side, with tube connection Ø60, right

Material: material mix

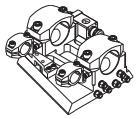

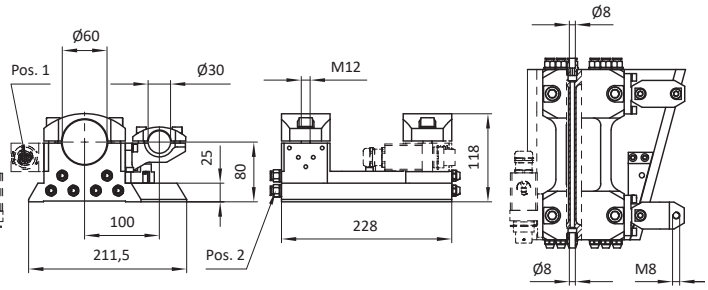

Part No.	Description	Connector [Pos. 1]	m [kg]	Ports [Pos. 2]
107030	MKS60/30-KPP52-L-R-P/E-1	yes (18-pin+PE)	6,50	Ø 8 mm (6x)
106284	MKS60/30-KPP52-L-R-P/E	yes (18-pin+PE)	6,50	Ø 10 mm (6x)
106343	MKS60/30-KPP52-L-R-P	no	6,20	Ø 10 mm (6x)
107034	MKS60/30-KPP52-L-R-P-1	no	6,20	Ø 8 mm (6x)

Coupling (MKS-KPP52-X accessories for fixed side)

Description	Part No.
MKS-ZKPP01-L	106548

Type: guiding rail, for dovetail coupling, left

Material: steel

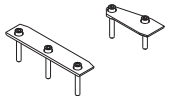

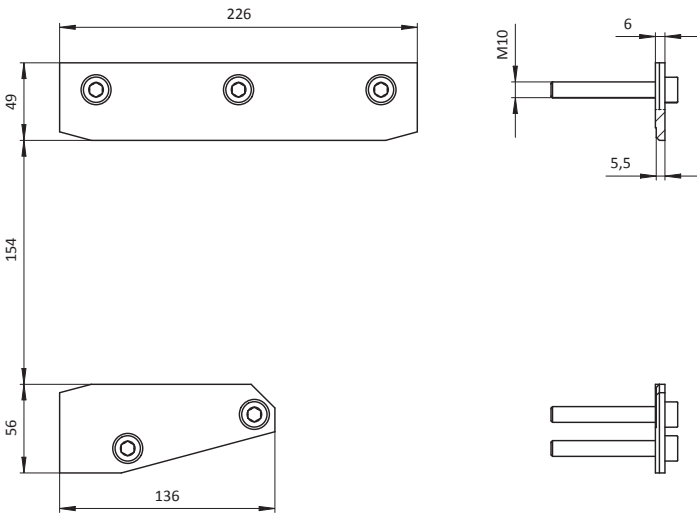

Part No.	Description	m [kg]
106548	MKS-ZKPP01-L	0,46

Description	Part No.
MKS-ZKPP01-R	106549

Type: guiding rail, for dovetail coupling, right

Material: steel

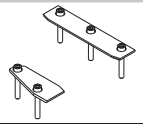

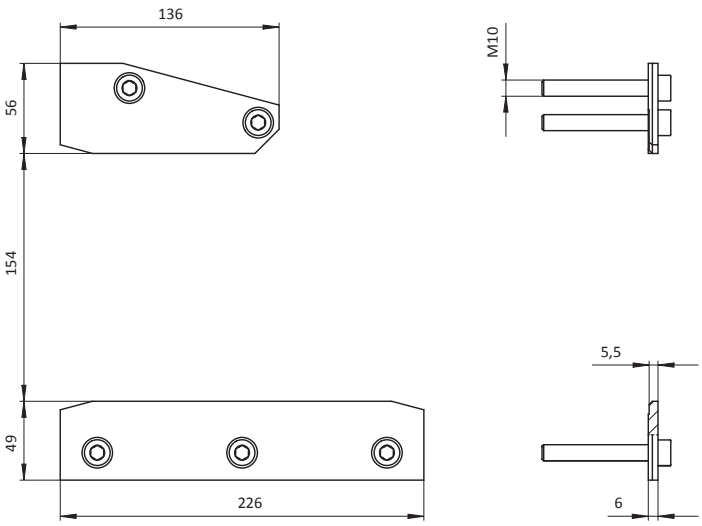

Part No.	Description	m [kg]
106549	MKS-ZKPP01-R	0,46

Description	Part No.
MKS-ZKPP02	106631

Type: locking slide, for dovetail coupling fixed side

Material: material mix

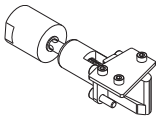

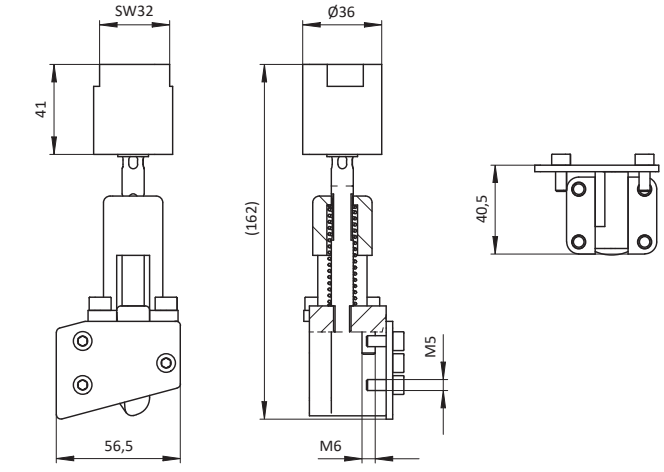

Part No.	Description	m [kg]
106631	MKS-ZKPP02	0,74

Coupling (MKSXX-KPP20-X fixed and loose side)

Description	Part No.
MKS-KPP20-F	100397

Type: dovetail, fixed side, with locking slide

Material: material mix

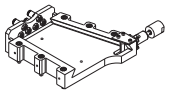

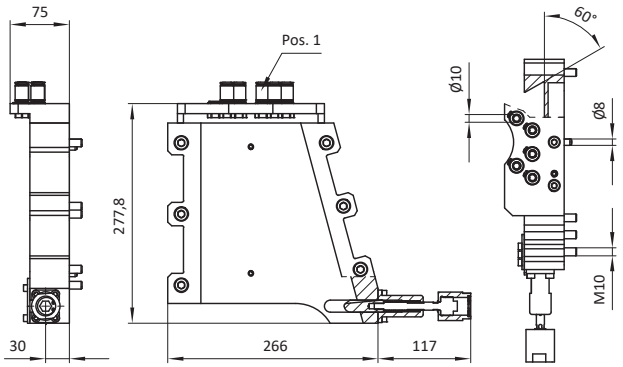

Part No.	Description	m [kg]	Ports [Pos. 1]
100397	MKS-KPP20-F	4,54	Ø 10 mm (6x)

Description	Part No.
MKS60-KPP20-L	100394

Type: dovetail, loose side

Material: material mix

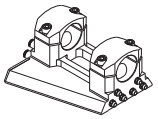

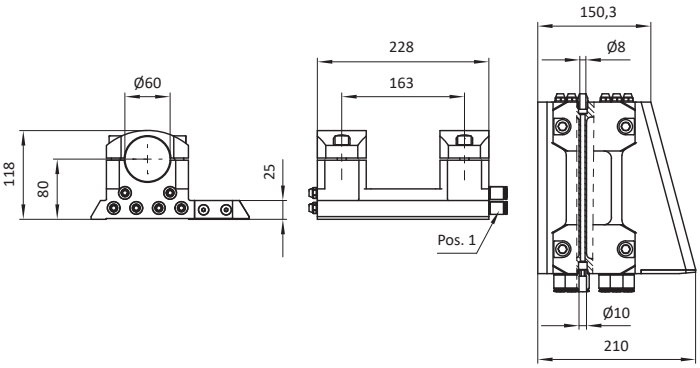

Part No.	Description	m [kg]	Ports [Pos. 1]
100394	MKS60-KPP20-L	5,25	Ø 10 mm (6x)

Coupling (MKS-KPP19-X fixed and loose side)

Description	Part No.
MKS-KPP19-1-F-L-X/X	see table

Type: dovetail, fixed side, with locking slide

Material: material mix

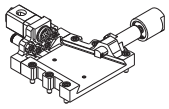

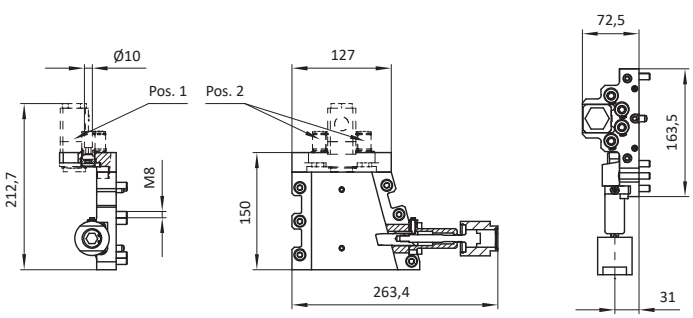

Part No.	Description	Connector [Pos. 1]	Ports [Pos. 2]	m [kg]
102299	MKS-KPP19-1-F-L	no	no	1,60
102566	MKS-KPP19-1-F-L-P	no	Ø10 mm (4x)	1,76
102558	MKS-KPP19-1-F-L-P/E	yes (6-pole+PE)	Ø10 mm (4x)	1,91

Description	Part No.
MKS-KPP19-1-F-R-X/X	see table

Type: dovetail, fixed side, with locking slide

Material: material mix

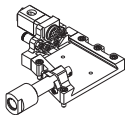

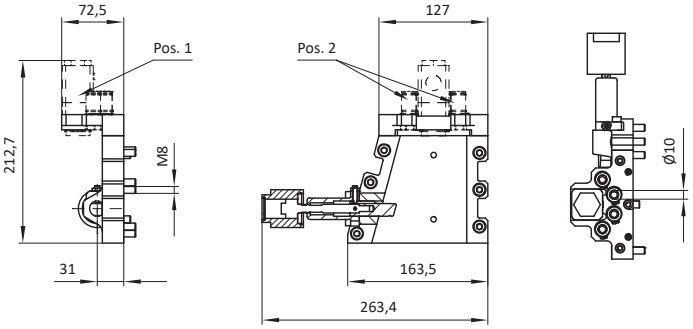

Part No.	Description	Connector [Pos. 1]	Ports [Pos. 2]	m [kg]
102476	MKS-KPP19-1-F-R	no	no	1,60
102568	MKS-KPP19-1-F-R-P	no	Ø10 mm (4x)	1,76
102560	MKS-KPP19-1-F-R-P/E	yes (6-pole+PE)	Ø10 mm (4x)	1,91

Description	Part No.
MKS-KPP19-1-L-L	102298

Type: dovetail, loose side, left

Material: material mix

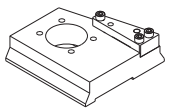

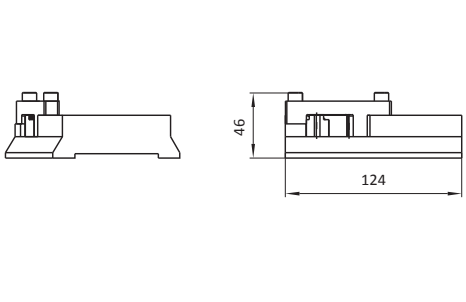

Part No.	Description	m [kg]
102298	MKS-KPP19-1-L-L	0,94

Description	Part No.
MKS-KPP19-1-L-R	102475

Type: dovetail, loose side, right

Material: material mix

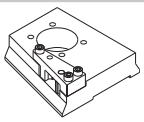

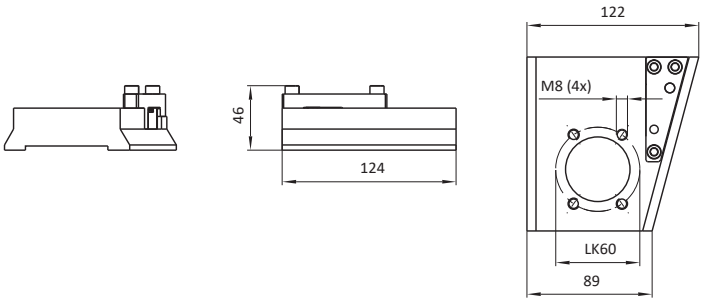

Part No.	Description	m [kg]
102475	MKS-KPP19-1-L-R	0,94

Coupling (MKS40-KPP41-X loose side)

Description	Part No.
MKS40-KPP41-L-L-X-S1	see table

Type: dovetail, loose side, with tube connection Ø40, left

Material: material mix

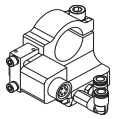

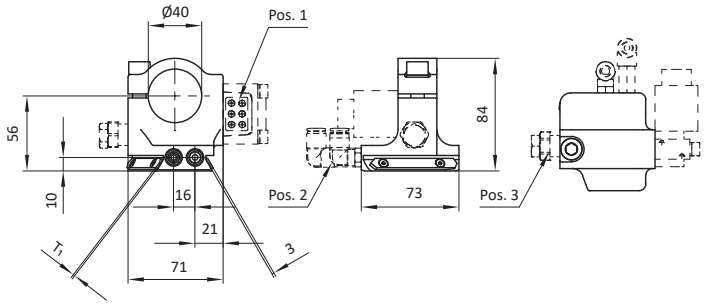

Part No.	Description	with electrics [Pos. 1]	Ports [Pos. 2]	T_1 [mm]	Safety lock [Pos. 3]
106970	MKS40-KPP41-L-L-P/E-S1	yes (6-pin)	Ø 8 mm (2x)	3	no
106967	MKS40-KPP41-L-L-S-S1	no	-	3,4	yes

Description	Part No.
MKS40-KPP41-L-R-X-S1	see table

Type: loose side, with tube connection Ø40, right, with / without pneumatics

Material: material mix

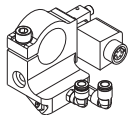

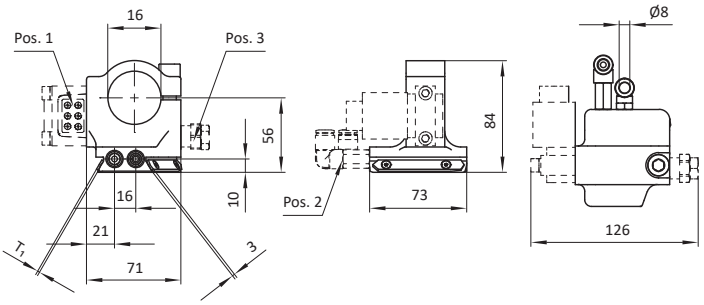

Part No.	Description	with electrics [Pos. 1]	Ports [Pos. 2]	T_1 [mm]	Safety lock [Pos. 3]
106969	MKS40-KPP41-L-R-P-S1	no	Ø 8 mm (2x)	3	no
106968	MKS40-KPP41-L-R-S-S1	no	-	3,4	yes

Description	Part No.
MKS40-KPP41-L-L-X-X	see table

Type: dovetail, loose side, left

Material: material mix

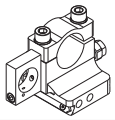

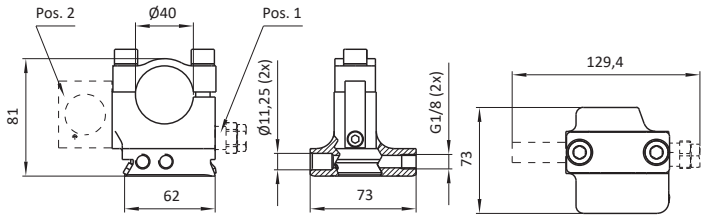

Part No.	Description	Safety lock [Pos. 1]	Mounting, for MKS-EST19 [Pos. 2]	m [kg]
103262	MKS40-KPP41-L-L-P	no	no	0,45
103260	MKS40-KPP41-L-L-P/E	no	yes	0,48
103268	MKS40-KPP41-L-L-S-P	yes	no	0,47
103266	MKS40-KPP41-L-L-S-P/E	yes	yes	0,50

Description	Part No.
MKS40-KPP41-L-R-X-X/X	see table

Type: dovetail, loose side, right

Material: material mix

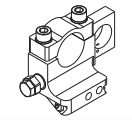

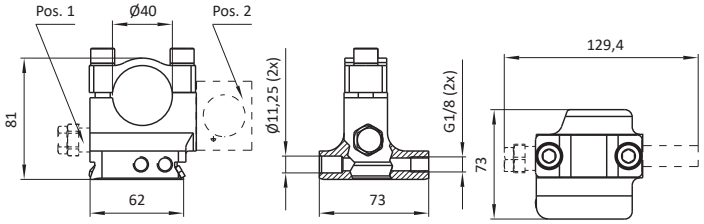

Part No.	Description	Safety lock [Pos. 1]	Mounting, for MKS-EST19 [Pos. 2]	m [kg]	Ports [Pos. 3]
103263	MKS40-KPP41-L-R-P	no	no	0,45	G1/8 (2x)
103261	MKS40-KPP41-L-R-P/E	no	yes	0,48	G1/8 (2x)
103269	MKS40-KPP41-L-R-S-P	yes	no	0,47	G1/8 (2x)
103267	MKS40-KPP41-L-R-S-P/E	yes	yes	0,50	G1/8 (2x)

Technical changes and errors are subject to change without notice!
www.springer.group
Document Date: CW 12.2025

Coupling (MKS40-KPP38-X loose side)

Description	Part No.
MKS40-KPP38-X-X-X	see table

Type: dovetail, loose side, left, with safety lock

Material: material mix

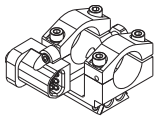

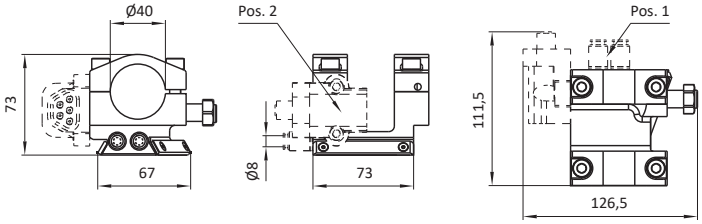

Part No.	Description	Ports [Pos. 1]	Connector [Pos. 2]	m [kg]
103199	MKS40-KPP38-L	no	no	0,58
103200	MKS40-KPP38-L-P	Ø 8 mm (2x)	no	0,59
103201	MKS40-KPP38-L-P-E	Ø 8 mm (2x)	yes	0,66

Description	Part No.
MKS40-KPP38-2-L-P-E	104132

Type: dovetail, loose side

Material: material mix

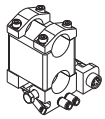

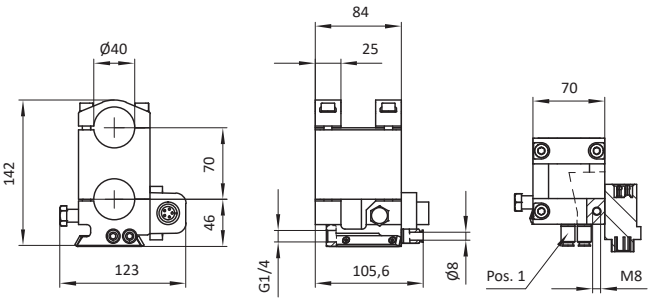

Part No.	Description	m [kg]	Ports [Pos. 1]
104132	MKS40-KPP38-2-L-P-E	1,57	Ø 8 mm (2x)

Coupling (MKS40-KPP46-X loose side)

Description	Part No.
MKS-KPP46-L-X-X	see table

Type: dovetail, loose side, left, with safety lock

Material: material mix

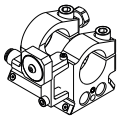

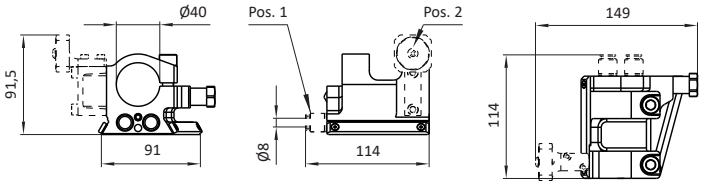

Part No.	Description	Ports [Pos. 1]	Data disk [Pos. 2]	m [kg]
103998	MKS40-KPP46-L	no	no	0,72
103999	MKS40-KPP46-L-P	Ø 8 mm (2x)	no	0,73
104000	MKS40-KPP46-L-P-E	Ø 8 mm (2x)	yes	0,87

Loose Side of Coupling

Description	Part No.
MKS30-AK110-B250	19709

Type: adapter, for tubular

Material: steel

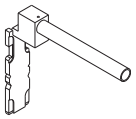

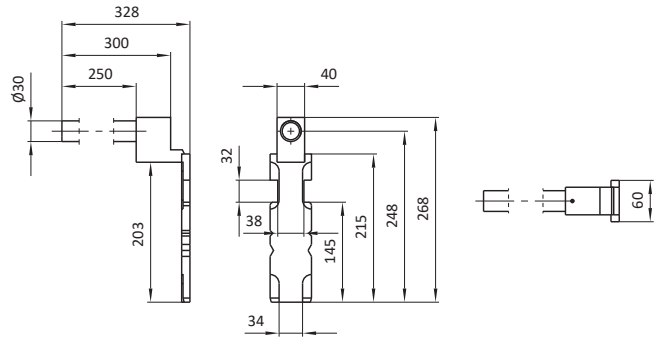

Part No.	Description	m [kg]
19709	MKS30-AK110-B250	2,50

Description	Part No.
MKS30-AK114-200	100418

Type: adapter, with clamp fixed

Material: steel



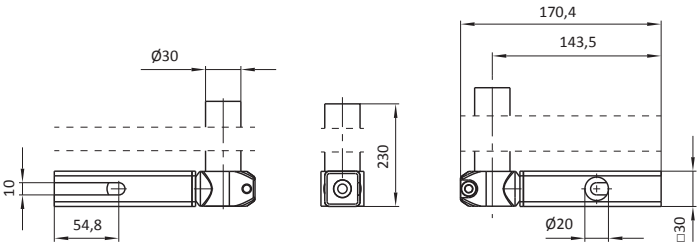

Part No.	Description	m [kg]
100418	MKS30-AK114-200	0,36

Description	Part No.
MKS30-AK115-400	100569

Type: adapter, rotatable

Material: steel

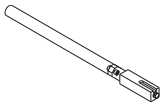

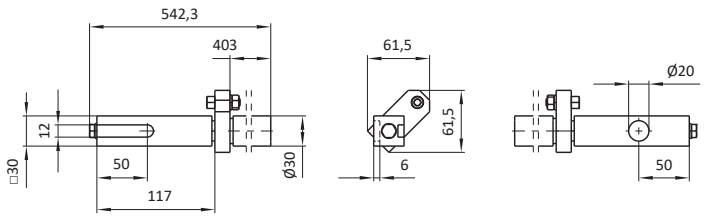

Part No.	Description	m [kg]
100569	MKS30-AK115-400	1,72

Description	Part No.
MKS30-AK106-200	100471

Type: tube angle, with clamp, with tube

Material: steel

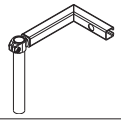

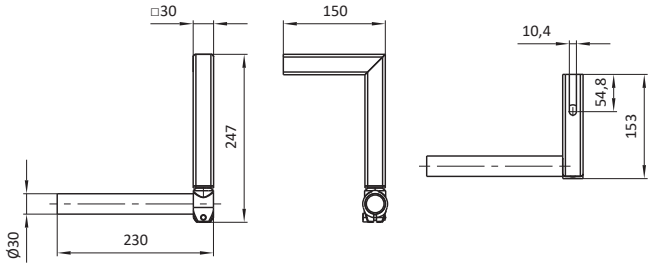

Part No.	Description	m [kg]
100471	MKS30-AK106-200	0,68

Description	Part No.
MKS30-AK105-200	19981

Type: adapter for couplings

Material: steel

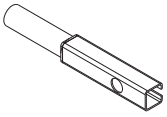

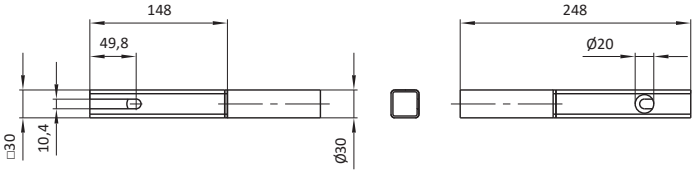

Part No.	Description	m [kg]
19981	MKS30-AK105-200	0,52

Coding Plate

Description	Part No.
MKS-AKW04-X	see table

Type: seat for coding plate

Material: see table

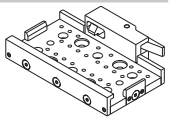

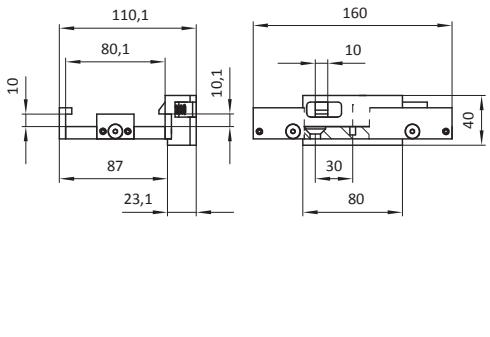

Part No.	Description	m [kg]	Material
100180	MKS-AKW04-1	0,7	aluminium
102488	MKS-AKW04-3	0,86	material mix, stops out of steel

Description	Part No.
MKS-KP02	14319

Type: universal

Material: aluminium

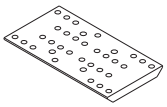

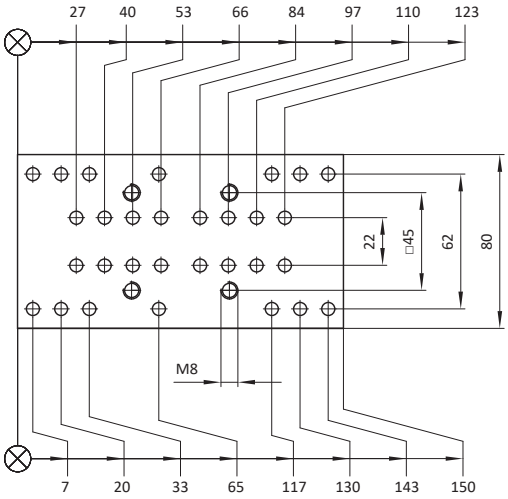

Part No.	Description	m [kg]
14319	MKS-KP02	0,30

Accessories for Coding Plate

Description	Part No.
MKSXX-ABK01-XXX	see table

Type: flange (square) with tube

Material: steel

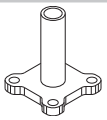

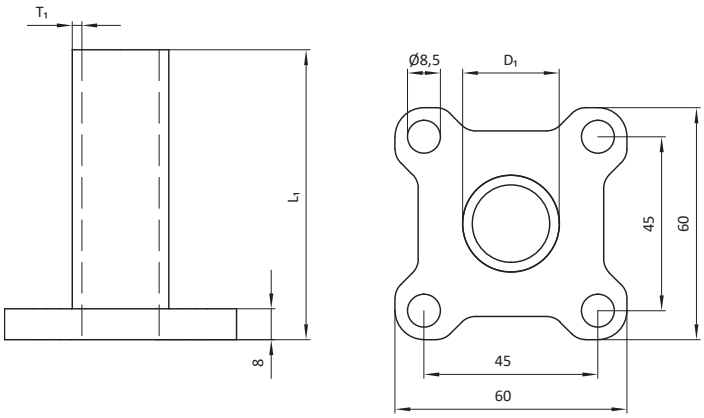

Part No.	Description	D_1 [mm]	L_1 [mm]	T_1 [mm]	m [kg]
11264	MKS20-ABK01-075	20	75	2,5	0,18
11265	MKS20-ABK01-100	20	100	2,5	0,24
11266	MKS20-ABK01-150	20	150	2,5	0,30
11267	MKS20-ABK01-200	20	200	2,5	0,36
11268	MKS20-ABK01-250	20	250	2,5	0,41
11269	MKS20-ABK01-300	20	300	2,5	0,47
11270	MKS20-ABK01-350	20	350	2,5	0,53
11271	MKS20-ABK01-400	20	400	2,5	0,59
11272	MKS20-ABK01-450	20	450	2,5	0,66
11273	MKS20-ABK01-500	20	500	2,5	0,73
12744	MKS20-ABK01-600	20	600	2,5	0,80
11254	MKS25-ABK01-075	25	75	2,5	0,24
11255	MKS25-ABK01-100	25	100	2,5	0,27
11256	MKS25-ABK01-150	25	150	2,5	0,34
11257	MKS25-ABK01-200	25	200	2,5	0,45
11258	MKS25-ABK01-250	25	250	2,5	0,48
11259	MKS25-ABK01-300	25	300	2,5	0,55
11260	MKS25-ABK01-350	25	350	2,5	0,62
11261	MKS25-ABK01-400	25	400	2,5	0,69
11262	MKS25-ABK01-450	25	450	2,5	0,76
11263	MKS25-ABK01-500	25	500	2,5	0,83
104358	MKS25-ABK01-550	25	550	2,5	0,90
12745	MKS25-ABK01-600	25	600	2,5	0,97
11228	MKS30-ABK01-075	30	75	3,0	0,22
11229	MKS30-ABK01-100	30	100	3,0	0,32
11230	MKS30-ABK01-150	30	150	3,0	0,42
11231	MKS30-ABK01-200	30	200	3,0	0,52
11232	MKS30-ABK01-250	30	250	3,0	0,63
11233	MKS30-ABK01-300	30	300	3,0	0,72
11234	MKS30-ABK01-350	30	350	3,0	0,82
11235	MKS30-ABK01-400	30	400	3,0	0,92
11236	MKS30-ABK01-450	30	450	3,0	1,01
11237	MKS30-ABK01-500	30	500	3,0	1,11
12746	MKS30-ABK01-600	30	600	3,0	1,31

Parts Rack

Description	Part No.
MKS-TAB01-1200	13623

Type: for empty station, base frame for vacancy station

Material: steel

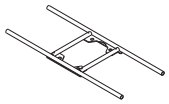

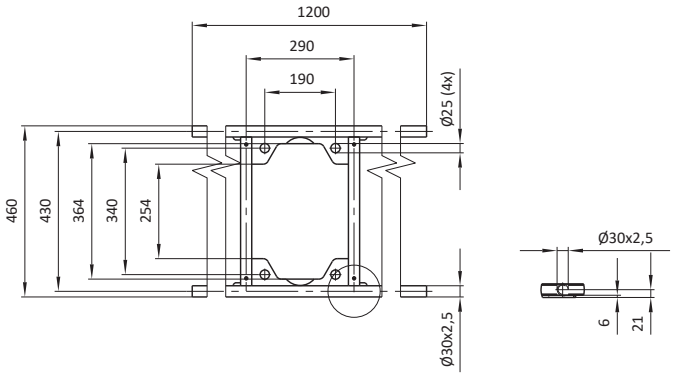

Part No.	Description	m [kg]
13623	MKS-TAB01-1200	7,57

Description	Part No.
MKS30-TAB23-X-1200	see table

Type: for empty station, base frame for vacancy station

Material: steel

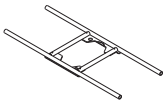

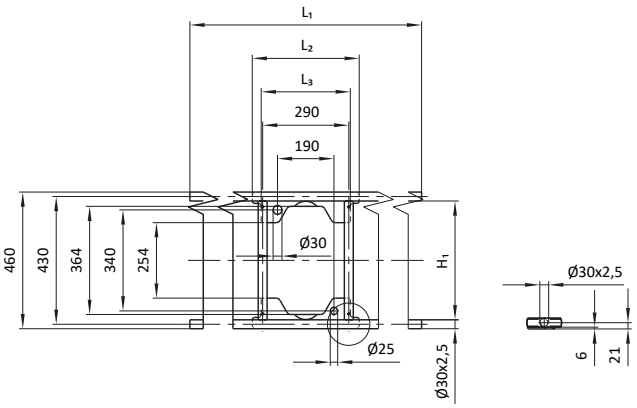

Part No.	Description	H_1 [mm]	L_1 [mm]	L_2 [mm]	L_3 [mm]	m [kg]
104011	MKS30-TAB23-1-1200	400	1200	360	300	7,59
104012	MKS30-TAB23-2-1200	1200	320	320	-	7,27

Description	Part No.
MKSXX-TAB15-0800	see table

Type: for empty station, base frame for vacancy station

Material: steel

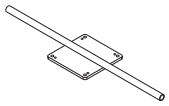

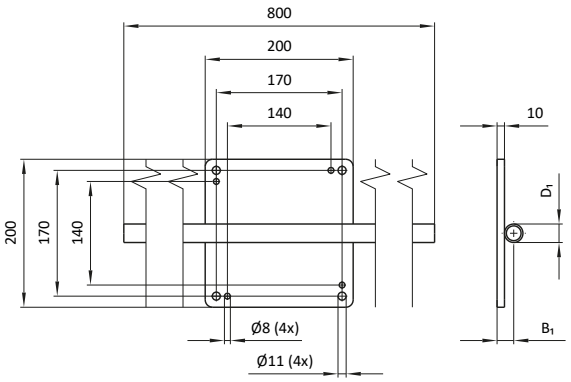

Part No.	Description	D_1 [mm]	B_1 [mm]	m [kg]
15901	MKS25-TAB15-800	25	22,5	4,19
15736	MKS30-TAB15-800	30	25	4,44

Description	Part No.
MKS25-ZLSA01-1XXX	see table

Type: for vacancy rack, shared tube

Material: steel

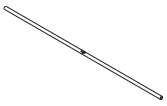

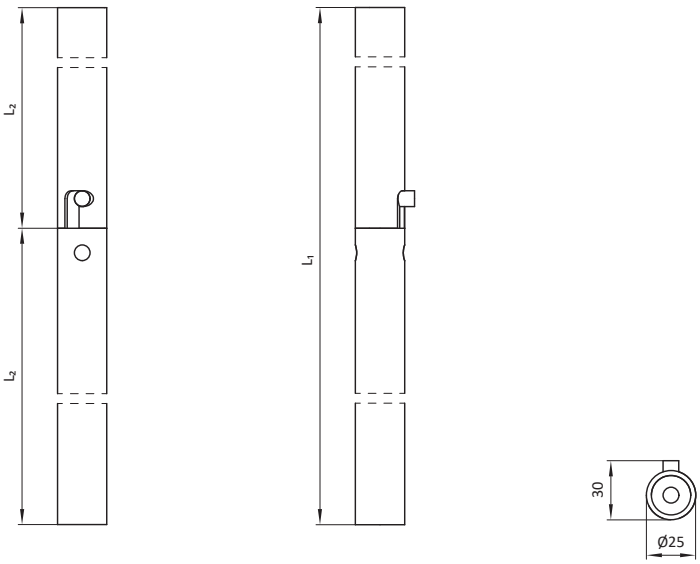

Part No.	Description	L_1 [mm]	L_2 [mm]	m [kg]
106641	MKS25-ZLSA01-1600	1600	800	2,38
106642	MKS25-ZLSA01-1800	1800	900	2,66

Parts Rack

Description	Part No.
MKS-ZAXX	see table

Type: vacancy pin with clamp

Material: steel

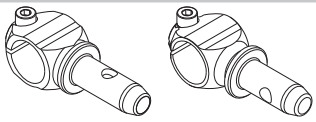

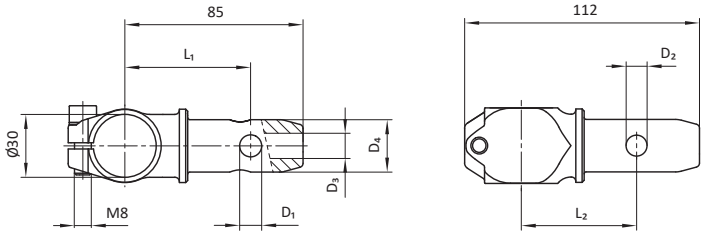

Part No.	Description	D_1 [mm]	D_2 [mm]	D_3 [mm]	D_4 [mm]	L_1 [mm]	L_2 [mm]	m [kg]
12643	MKS-ZA03	-	10	12	20	-	55	0,30
12651	MKS-ZA04	-	10	12	25	-	55	0,35
13103	MKS-ZA05	10,5	-	-	20	60	-	0,34
13104	MKS-ZA06	10,5	-	-	25	60	-	0,40

Description	Part No.
MKS25-ZAXX	see table

Type: vacancy pin with clamp

Material: steel



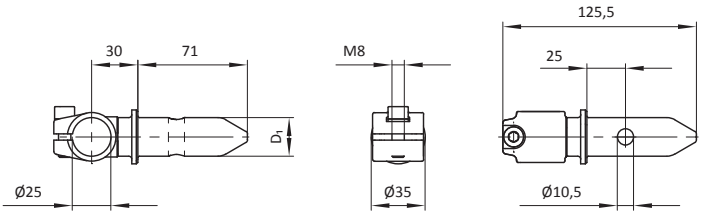

Part No.	Description	D_1 [mm]	m [kg]
16383	MKS25-ZA09	20	0,33
16384	MKS25-ZA10	25	0,40

Robot Coupling for Square Tube (fixed side)

Description	Part No.
MKS-KPP25-F-X	see table

Type: for robot, fixed side, with hand lever, with locking bolt, for square tube 50x50

Material: steel

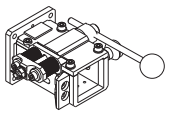

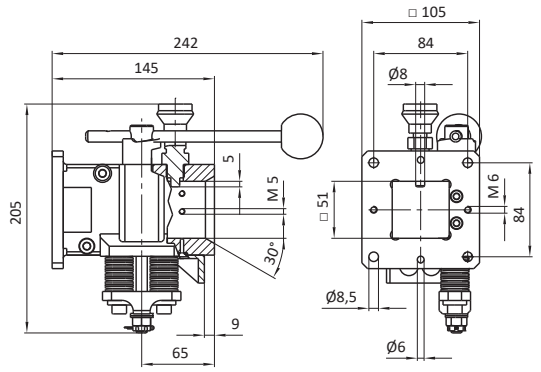

Part No.	Description	m [kg]	Electrics and Pneumatics
101876	MKS-KPP25-F	4,55	with electric and pneumatic connection preparation
107684	MKS-KPP25-F-1	4,55	without electric and pneumatic connection preparation

Description	Part No.
MKS-KPP57-F	106713

Type: for robot, fixed side, with hand lever, with locking bolt, for square tube 50x50

Material: steel

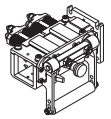

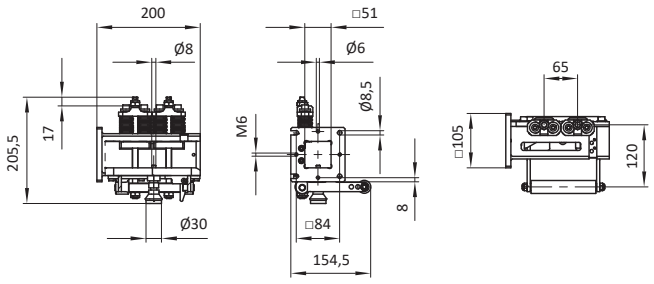

Part No.	Description	m [kg]
106713	MKS-KPP57-F	7,80

Description	Part No.
MKS-KPP55-F	106670

Type: for robot, fixed side, with hand lever, with locking bolt, for square tube 50x50

Material: steel

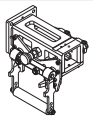

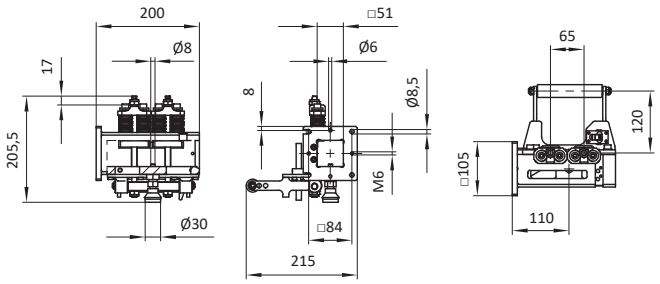

Part No.	Description	m [kg]
106670	MKS-KPP55-F	7,21

Description	Part No.
MKS-KPP23-F-1	102633

Type: for robot, with locking bolt, with hand lever, for square tube 70x70

Material: steel

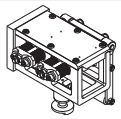

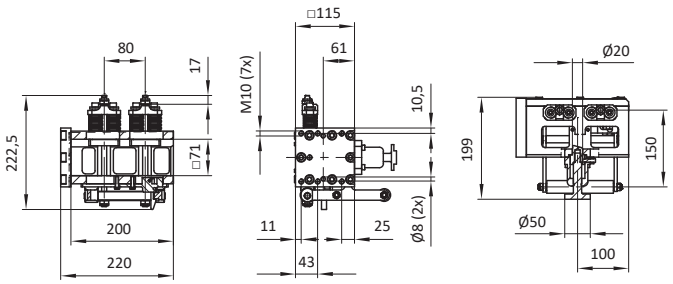

Part No.	Description	m [kg]
102633	MKS-KPP23-F-1	13,79

Description	Part No.
MKS-KPP23-F	101803

Type: for robot, with locking bolt, fixed side, with hand lever, for square tube 70x70

Material: steel

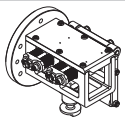

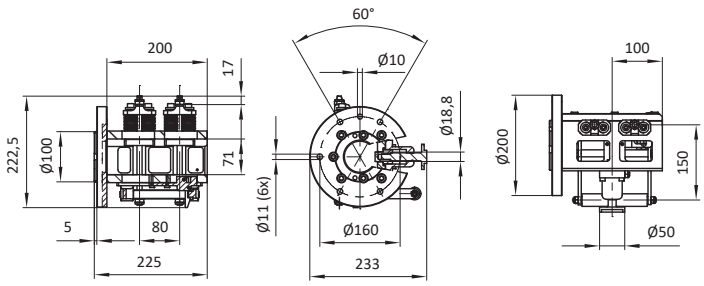

Part No.	Description	m [kg]
101803	MKS-KPP23-F	14,39

Technical changes and errors are subject to change without notice!
www.springer.group
Document Date: CW 12.2025

Robot Coupling for Square Tube (loose side)

Description	Part No.
MKS40-GAKP28-P/E-DXXXX	see table

Type: for robot coupling, loose side

Material: steel



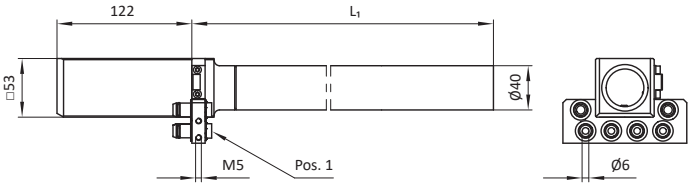

Part No.	Description	L_1 [mm]	m [kg]	Ports [Pos. 1]
104233	MKS40-GAKP28-P/E-D800	800	3,90	G1/8 (6x)
104234	MKS40-GAKP28-P/E-D1000	1000	4,36	G1/8 (6x)
104235	MKS40-GAKP28-P/E-D1200	1200	4,82	G1/8 (6x)

Description	Part No.
MKS50-GAKP27	103237

Type: for robot coupling, loose side

Material: steel

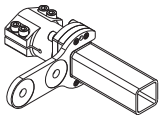

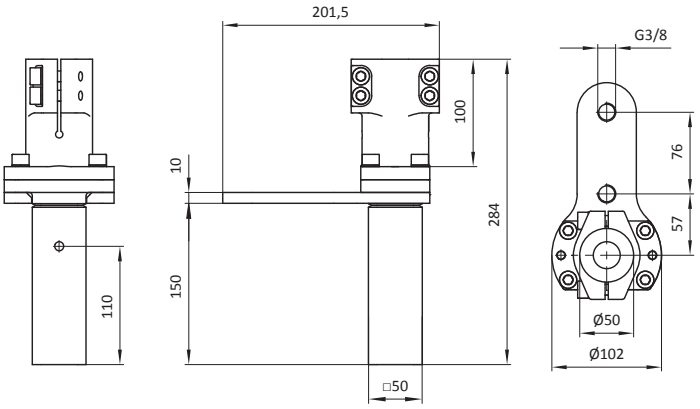

Part No.	Description	m [kg]
103237	MKS50-GAKP27	2,39

Description	Part No.
MKS50-GAKP27-2	103954

Type: for robot coupling, loose side

Material: material mix

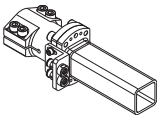

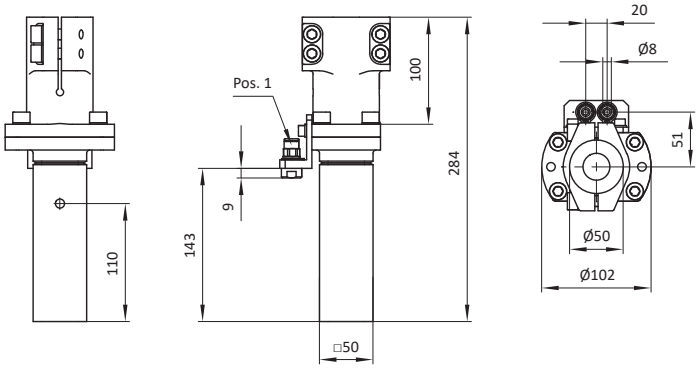

Part No.	Description	m [kg]	Ports [Pos. 1]
103954	MKS50-GAKP27-2	2,26	Ø 8 mm (2x)

Description	Part No.
MKS50x50/40-GAKP29-C1800	107368

Type: for robot coupling, loose side

Material: material mix

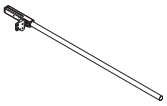

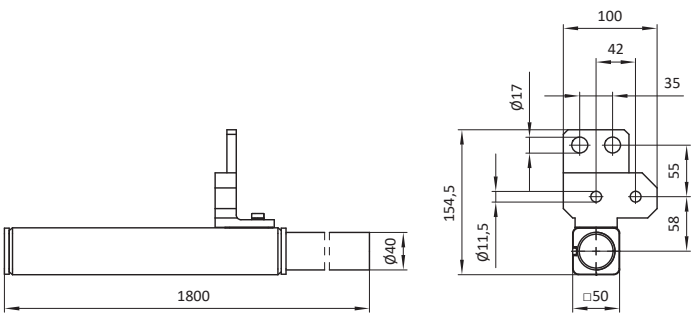

Part No.	Description	m [kg]
107368	MKS50x50/40-GAKP29-C1800	5,16

Loose Side of Coupling

Description	Part No.
MKS-KPP59-X	see table

Type: 1-channel, loose side

Material: material mix

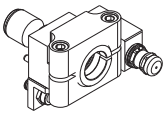

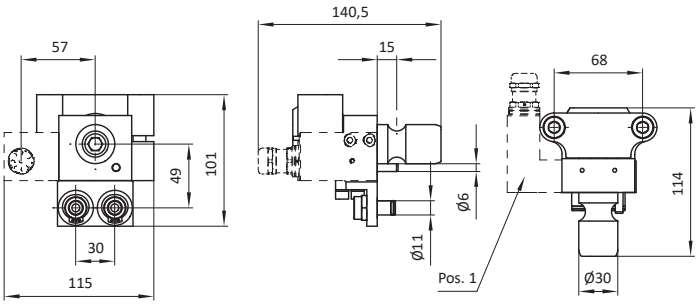

Part No.	Description	m [kg]	Connector [Pos. 1]
107360	MKS30-KPP59	0,95	without
107361	MKS30-KPP59-E	1,10	with

Description	Part No.
MKS40-KPP63-L	108021

Type: with tube connection, loose side

Material: aluminium

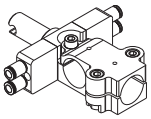

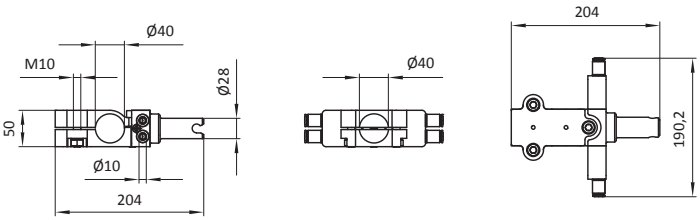

Part No.	Description	m [kg]
108021	MKS40-KPP63-L	1,12

Description	Part No.
MKS-KPP61-L	107376

Type: electric and compress air coupling, loose side

Material: material mix

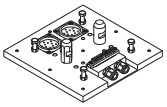

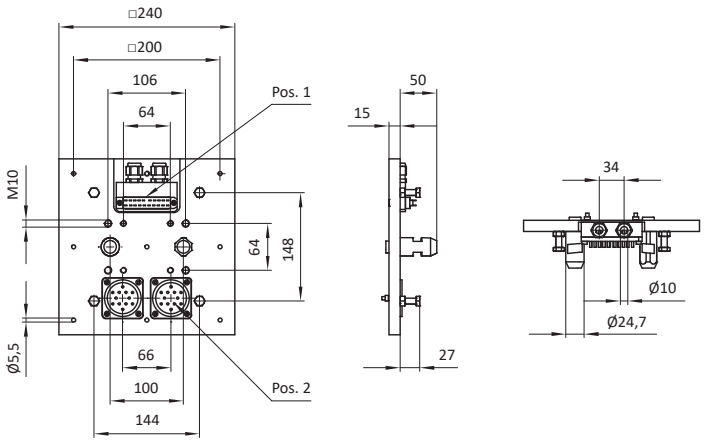

Part No.	Description	m [kg]	Connector [Pos. 1]	Ports [Pos. 2]
107376	MKS-KPP61-L	2,51	20-pin	multiple coupling, for 12 hoses (2x)

Coupling (MKS-KPP54-F fixed & MKS20-AK130-X loose side)

Description	Part No.
MKS-KPP54-F	106385

Type: fixed side

Material: steel

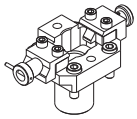

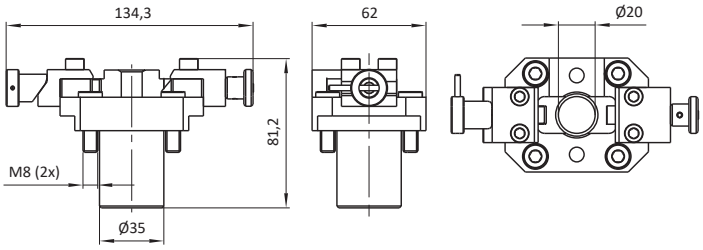

Part No.	Description	m [kg]
106385	MKS-KPP54-F	1,62

Description	Part No.
MKS20-AK130	103919

Type: with clamp fixed, loose side

Material: steel

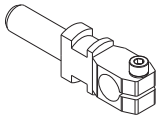

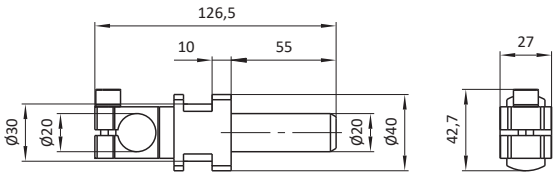

Part No.	Description	m [kg]
103919	MKS20-AK130	0,38

Description	Part No.
MKS20-AK130-1-SX	see table

Type: loose side

Material: steel

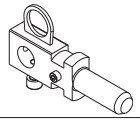

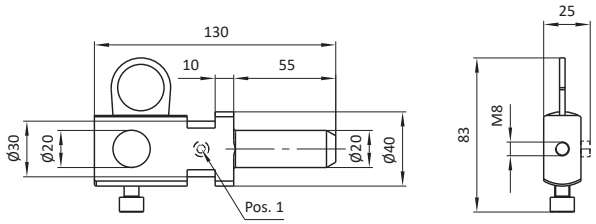

Part No.	Description	m [kg]	Screw [Pos. 1]
105396	MKS20-AK130-1-S1	0,53	no
106384	MKS20-AK130-1-S2	0,51	yes

Gripper Rail

Description	Part No.
MKS-GS70-...	see table

Type: rectangular profile with 2+1+1 T-gooves, customised dimensions and number of lock plates

Material: material mix

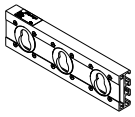

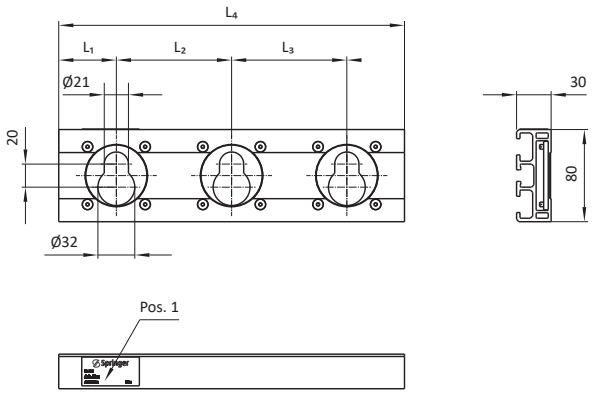

Part No.	Description	L_1 [mm]	L_2 [mm]	L_3 [mm]	L_4 [mm]	m [kg]	Label [Pos. 1]
	MKS-GS70-"L_4"	-	-	-			with / without
	MKS-GS70-"L_4"-"L_1"		-	-			with / without
	MKS-GS70-"L_4"-"L_1"-"L_2"			-			with / without
	MKS-GS70-"L_4"-"L_1"-"L_2"-"L_3"						with / without
Example with 3 lock plates:							
108772	MKS-GS70-1460-130-600-440	130	600	440	1460	3,22	with

Description	Part No.
MKS-GS51-X-X-XXXX	see table

Type: rectangular profile with 2 lock plate, 2+1+1 T-gooves

Material: material mix



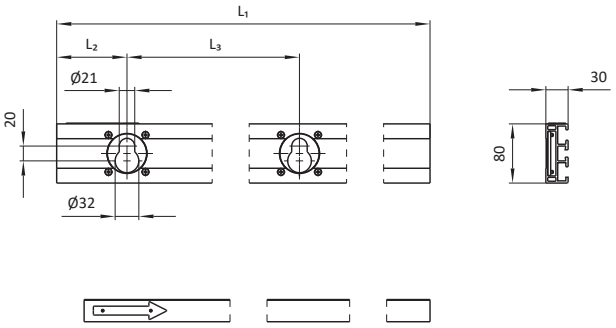

Part No.	Description	L_1 [mm]	L_2 [mm]	L_3 [mm]	left / right	m [kg]
102431	MKS-GS51-4-R-1560	1560	80	1080	right, as illustrated	3,19
102430	MKS-GS51-4-L-1560	1560	80	1080	left, symmetrical	3,19
102425	MKS-GS51-1-R-1560	1560	95	1065	right, as illustrated	3,19
102424	MKS-GS51-1-L-1560	1560	95	1065	left, symmetrical	3,19
102427	MKS-GS51-2-R-1560	1560	190	1070	right, as illustrated	3,19
102426	MKS-GS51-2-L-1560	1560	190	1070	left, symmetrical	3,19
102429	MKS-GS51-3-R-1860	1860	285	1075	right, as illustrated	3,77
102428	MKS-GS51-3-L-1860	1860	285	1075	left, symmetrical	3,77

Description	Part No.
MKS-GS46-5000	see table

Type: rectangular, 2+2 T-gooves

Material: aluminium

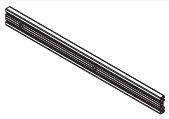

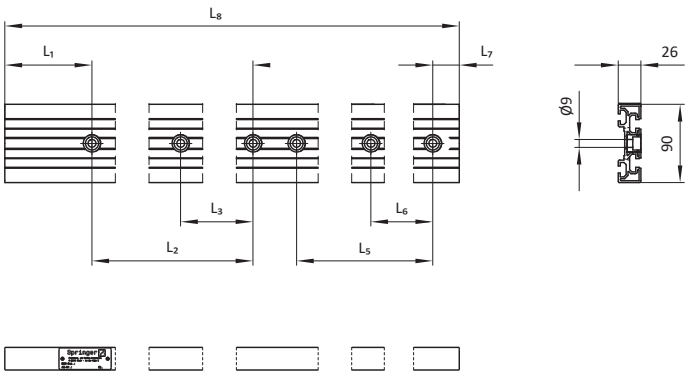

Part No.	Description	L_1 [mm]	L_2 [mm]	L_3 [mm]	L_4 [mm]	L_5 [mm]	L_6 [mm]	L_7 [mm]	L_8 [mm]	m [kg]
104194	MKS-GS46-750	137,5	1x450	425	25	-	-	137,5	750	1,60
102123	MKS-GS46-3000	125	6x475	475	-	-	-	25	3000	6,40
102124	MKS-GS46-4000	75	4x475	475	50	4x475	475	75	4000	8,55
102125	MKS-GS46-5000	100	5x475	475	50	5x475	475	100	5000	10,6

Description	Part No.
MKS-GS64-X-XXXX	see table

Type: rectangular with 2 / 3 lock plate, 2+1+1 T-gooves

Material: material mix

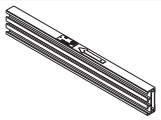

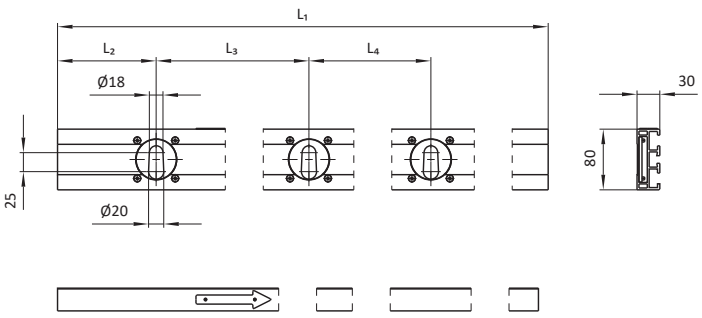

Part No.	Description	L_1 [mm]	L_2 [mm]	L_3 [mm]	L_4 [mm]	left / right	m [kg]
106628	MKS-GS64-R-550	550	100	200	-	right, as illustrated	1,28
106627	MKS-GS64-L-550	550	100	200	-	left, symmetrical	1,28
106630	MKS-GS64-R-860	860	130	600	-	right, as illustrated	1,87
106626	MKS-GS64-L-860	860	130	600	-	left, symmetrical	1,87
106625	MKS-GS64-R-1460	1460	130	600	440	right, as illustrated	3,15
106624	MKS-GS64-L-1460	1460	130	600	440	left, symmetrical	3,15

Slot Nut for Gripper Rail

Description	Part No.
MKS-NS12	104982

Type: rectangular, with threaded hole, for T-grooves

Material: steel

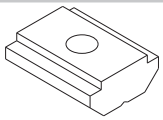

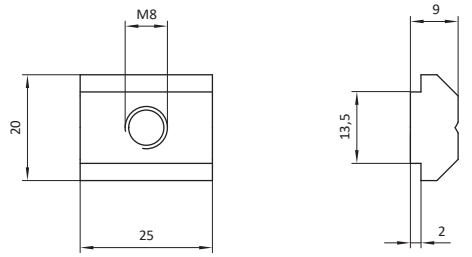

Part No.	Description	m [kg]
104982	MKS-NS12	0,05

Description	Part No.
MKS-NS08	102040

Type: rectangular, with threaded hole

Material: steel

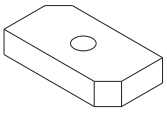

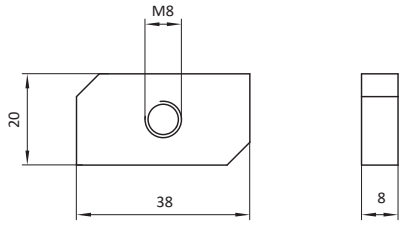

Part No.	Description	m [kg]
102040	MKS-NS08	0,04

Description	Part No.
MKS-NSXX	see table

Type: rectangular, with threaded hole

Material: steel

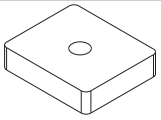

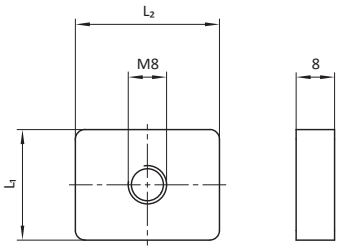

Part No.	Description	L_1 [mm]	L_2 [mm]	m [kg]
16998	MKS-NS03	23	30	0,04
101467	MKS-NS07	30	35	0,06

Description	Part No.
MKS-NS10	103051

Type: square, with threaded hole

Material: steel

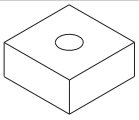

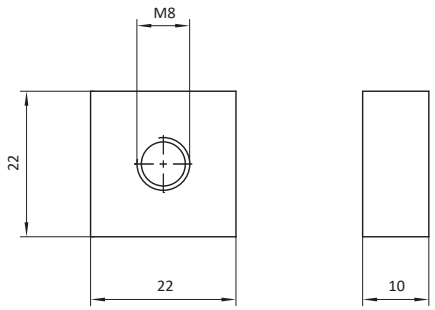

Part No.	Description	m [kg]
103051	MKS-NS10	0,03

Description	Part No.
MKS-NS09-X	see table

Type: rectangular, with 2 threaded holes

Material: steel

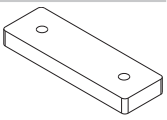

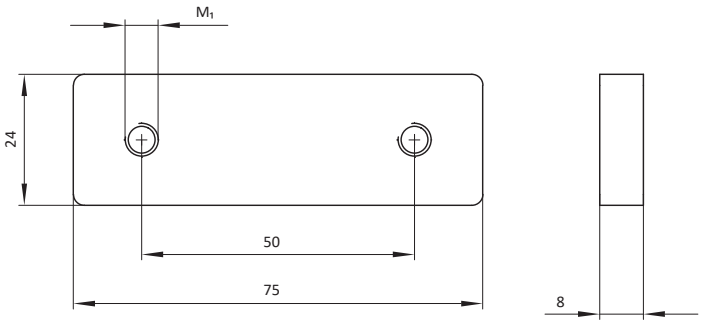

Part No.	Description	M_1 [mm]	m [kg]
102513	MKS-NS09	M6	0,11
110950	MKS-NS09-1	M8	0,11

Description	Part No.
MKS-NS01	14359

Type: rectangular, with 2 threaded holes

Material: steel

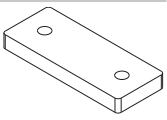

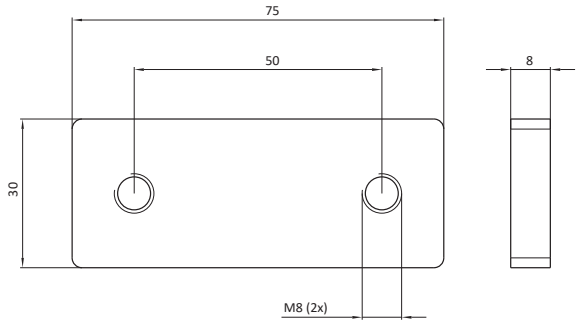

Compatibility: Slot Nuts and Gripper Rails

Slot nut for gripper rail MKS...	for slot [1] or [2]	Part No.	Description	Thread
...GS51 ...GS53 ...GS63 ...GS64 ...GS65 ...GS70	1	16998	MKS-NS03	M8
	1	102040	MKS-NS08	M8
	1	110950	MKS-NS09-1	2xM8
	1	103051	MKS-NS10	M8
	1	104982	MKS-NS12	M8
	1	102513	MKS-NS09	2xM6
	2	105467	MKS-NS13	M4
	2	107045	MKS-NS13-1	M6

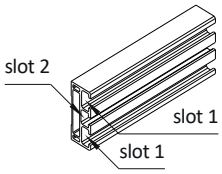

Slot nut for gripper rail MKS...	for slot [1] or [2]	Part No.	Description	Thread	Type
...GS46 ...GS52 ...GS57 ...GS62 ...GS66 ...GS67 ...GS68 ...GS69	1	76305	slot nut	M8	with spring
	1	74165	slot nut	M8	hammer nut
	1	76932	slot nut	M8	T-nut
	1	102513	MKS-NS09	2xM6	
	1	74166	slot nut	M6	hammer nut
	2	70258	slot nut	M6	with spring plunger
	2	70117	slot nut	M8	with spring loaded pressure piece

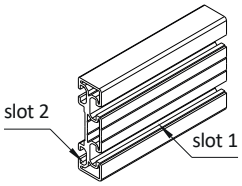

Slot nut for gripper rail MKS...	for slot [1] or [2]	Part No.	Description	Thread
...GS31 ...GS47 ...GS48 ...GS49 ...GS50	1	14359	MKS-NS01	2xM8
	1	16998	MKS-NS03	M8
	1	102040	MKS-NS08	M8

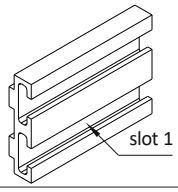

Slot nut for gripper rail MKS...	for slot [1] or [2]	Part No.	Description	Thread
...GS35 bis GS42	1	14359	MKS-NS01	2xM8
	1	16998	MKS-NS03	M8
	1	101467	MKS-NS07	M8

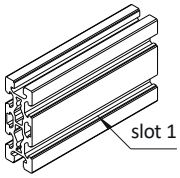

Locking Device for Gripper Rail

Description	Part No.
MKS-KPP50-X	see table

Type: mounting retention, for gripper rail on transfer bar

Material: steel

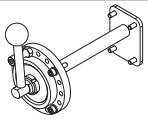

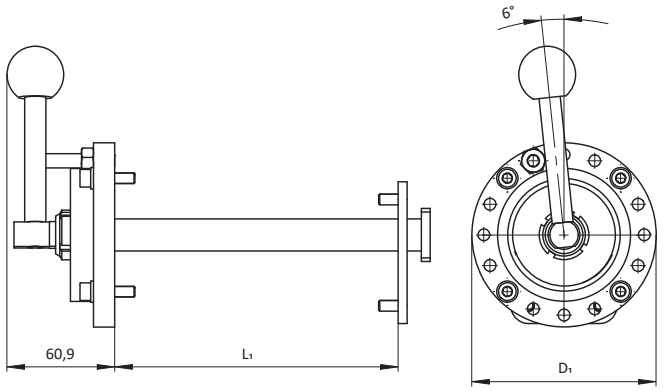

Part No.	Description	D_1 [mm]	L_1 [mm]	m [kg]
105476	MKS-KPP50	104	160	1,90
106278	MKS-KPP50-1	104	210	1,90
106471	MKS-KPP50-2	70	160	1,17
107630	MKS-KPP50-5	70	165	1,18

Description	Part No.
MKS-KPP50-X-X	see table

Type: mounting retention, for gripper rail on transfer bar

Material: steel

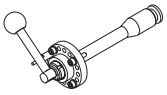

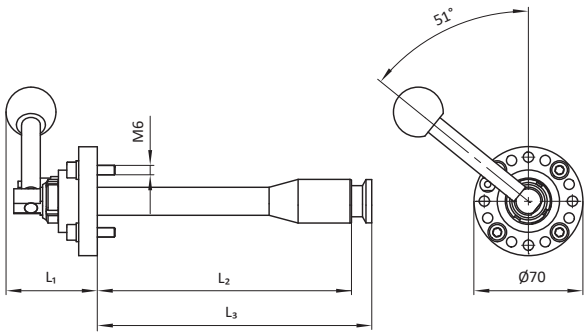

Part No.	Description	L_1 [mm]	L_2 [mm]	L_3 [mm]	m [kg]
107467	MKS-KPP50-4	58,7	215	228	1,09
107631	MKS-KPP50-6	58,7	165	176,3	1,07
107801	MKS-KPP50-6-1	178,7	165	176,3	1,25

Seat for Gripper Rail

Description	Part No.
MKS-GSZ07-01	14829

Type: seat for gripper rail

Material: steel

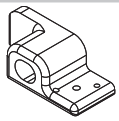

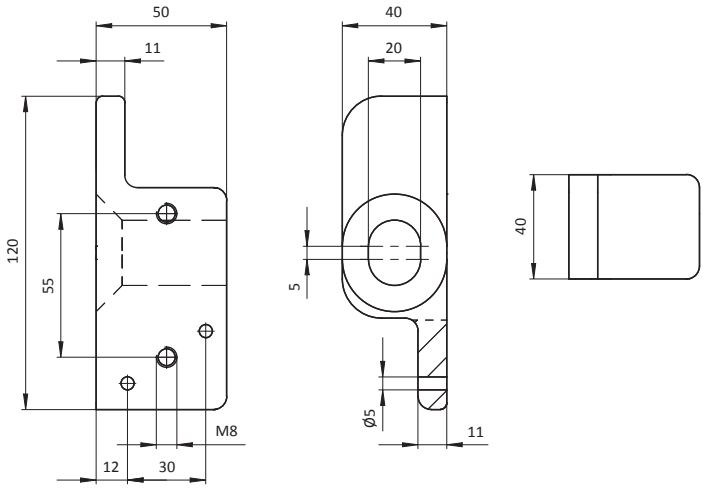

Part No.	Description	m [kg]
14829	MKS-GSZ07-01	0,78

Description	Part No.
MKS-GSZ07-02	14830

Type: seat for gripper rail

Material: steel

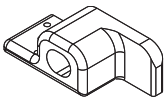

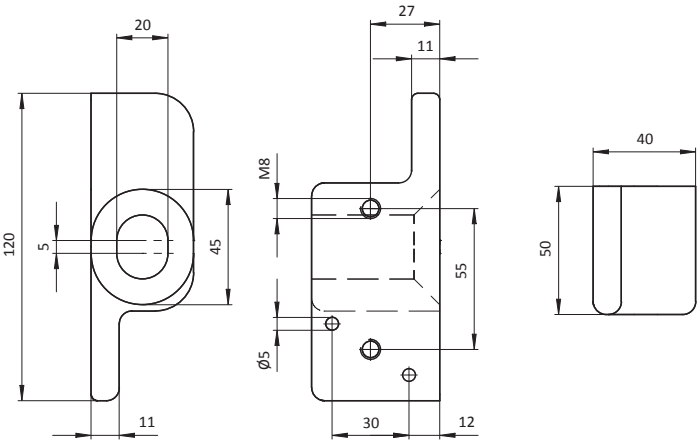

Part No.	Description	m [kg]
14830	MKS-GSZ07-02	0,78

Description	Part No.
MKS-GSZ06-01	14827

Type: seat for gripper rail

Material: steel

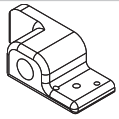

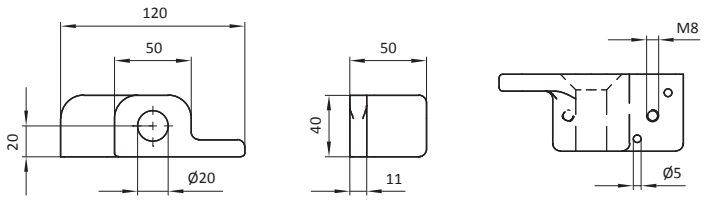

Part No.	Description	m [kg]
14827	MKS-GSZ06-01	0,84

Description	Part No.
MKS-GSZ06-02	14828

Type: seat for gripper rail

Material: steel

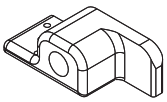

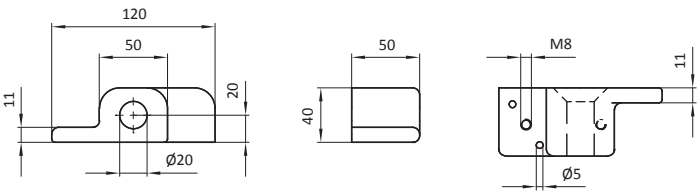

Part No.	Description	m [kg]
14828	MKS-GSZ06-02	0,84

3. Connection Elements

Index

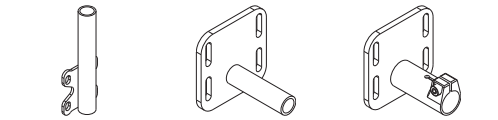

Mounting for Gripper Rail 102

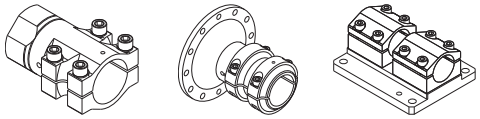

Mounting for Robot Arm 110

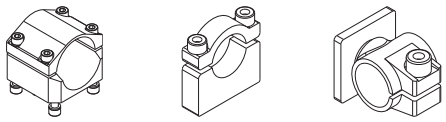

Splitted Clamp and Clamp Fixed 112

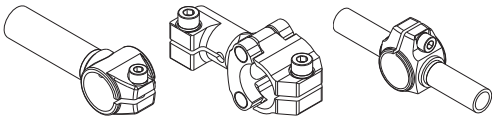

T-Connector 114

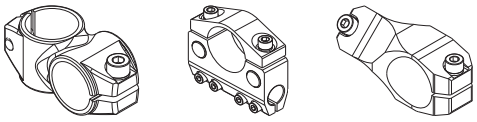

Cross Connector 119

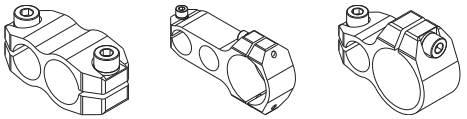

Parallel Connector 121

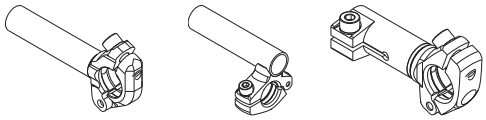

Ball Connector 122

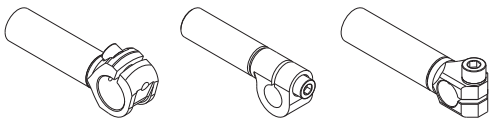

Rod Journal Clamp 124

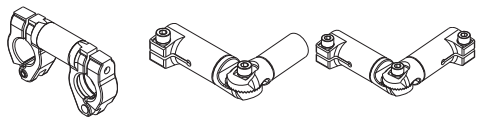

Hinge Connector 125

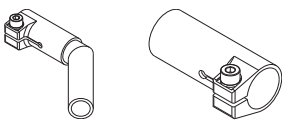

Clamp Seat 128

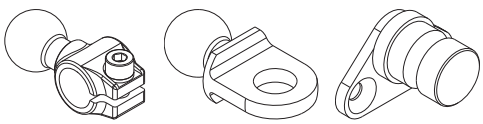

Adapter with Ball/Rod Journal 130

Mounting for Gripper Rail

Description	Part No.
MKSXX-AK23-2-DXXX	see table

Type: flange with tube

Material: steel



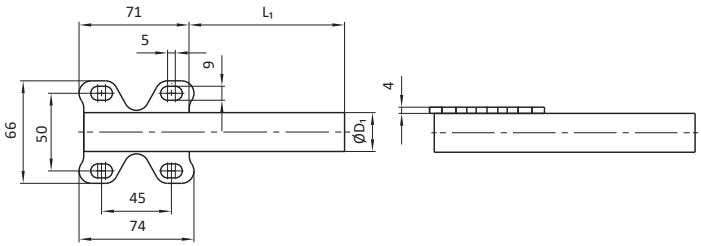

Part No.	Description	D_1 [mm]	L_1 [mm]	m [kg]
104816	MKS20-AK23-2-D100	20	100	0,29
104817	MKS20-AK23-2-D150	20	150	0,34
104818	MKS20-AK23-2-D200	20	200	0,40
104819	MKS20-AK23-2-D250	20	250	0,45
105073	MKS20-AK23-2-D300	20	300	0,50
104222	MKS25-AK23-2-D100	25	100	0,34
104223	MKS25-AK23-2-D150	25	150	0,41
104224	MKS25-AK23-2-D200	25	200	0,48
104225	MKS25-AK23-2-D250	25	250	0,55
106528	MKS25-AK23-2-D300	25	300	0,62
104824	MKS30-AK23-2-D100	30	100	0,39
104825	MKS30-AK23-2-D150	30	150	0,48
104826	MKS30-AK23-2-D200	30	200	0,56
104827	MKS30-AK23-2-D250	30	250	0,65

Description	Part No.
MKSXX-AK23-XXX	see table

Type: flange with tube

Material: steel

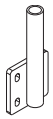

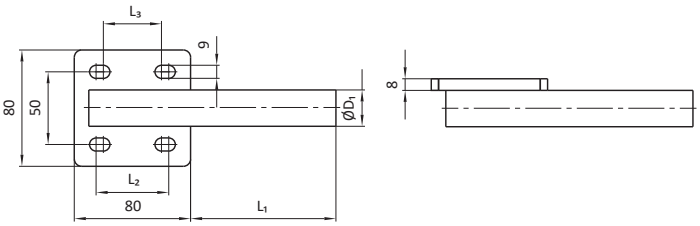

Part No.	Description	D_1 [mm]	L_1 [mm]	L_2 [mm]	L_3 [mm]	m [kg]
14308	MKS20-AK23-050	20	50	50	40	0,53
14309	MKS20-AK23-075	20	75	50	40	0,56
14310	MKS20-AK23-100	20	100	50	40	0,59
14311	MKS20-AK23-150	20	150	50	40	0,65
14312	MKS20-AK23-200	20	200	50	40	0,71
14313	MKS20-AK23-250	20	250	50	40	0,78
14314	MKS20-AK23-300	20	300	50	40	0,84
14315	MKS20-AK23-350	20	350	50	40	0,90
14316	MKS20-AK23-400	20	400	50	40	0,97
14317	MKS20-AK23-450	20	450	50	40	1,03
14318	MKS20-AK23-500	20	500	50	40	1,09
12928	MKS25-AK23-100	25	100	50	40	0,65
12930	MKS25-AK23-150	25	150	50	40	0,69
12931	MKS25-AK23-175	25	175	50	40	0,73
12932	MKS25-AK23-200	25	200	50	40	0,77
12933	MKS25-AK23-225	25	225	50	40	0,81
12934	MKS25-AK23-250	25	250	50	40	0,86
17395	MKS25-AK23-300	25	300	50	40	0,98
17623	MKS25-AK23-350	25	350	50	40	1,06
100558	MKS25-AK23-400	25	400	50	40	1,14
100072	MKS25-AK23-1-250	25	250	56	40	0,95
100073	MKS25-AK23-1-300	25	300	56	40	1,03
100074	MKS25-AK23-1-350	25	350	56	40	1,11
16177	MKS30-AK23-075	30	75	50	40	0,66
15153	MKS30-AK23-100	30	100	50	40	0,71
15154	MKS30-AK23-125	30	125	50	40	0,76
15155	MKS30-AK23-150	30	150	50	40	0,81
15156	MKS30-AK23-200	30	200	50	40	0,91
15157	MKS30-AK23-250	30	250	50	40	1,01
100639	MKS30-AK23-300	30	300	50	40	1,11
102084	MKS30-AK23-400	30	400	50	40	1,31
102085	MKS30-AK23-500	30	500	50	40	1,51
102086	MKS30-AK23-600	30	600	50	40	1,71
102087	MKS30-AK23-700	30	700	50	40	1,91
102088	MKS30-AK23-800	30	80	50	40	2,11
102089	MKS30-AK23-900	30	900	50	40	2,31
102090	MKS30-AK23-1000	30	1000	50	40	2,51

Mounting for Gripper Rail

Description	Part No.
MKSXX-AK24-2-DXXX	see table

Type: flange with tube

Material: steel

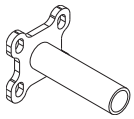

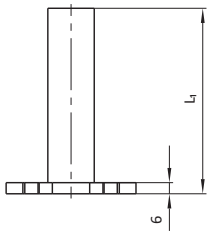

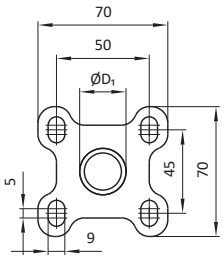

Part No.	Description	D_1 [mm]	L_1 [mm]	m [kg]
104812	MKS20-AK24-2-D100	20	100	0,24
104813	MKS20-AK24-2-D150	20	150	0,30
104814	MKS20-AK24-2-D200	20	200	0,35
104815	MKS20-AK24-2-D250	20	250	0,40
105074	MKS20-AK24-2-D300	20	300	0,46
104820	MKS25-AK24-2-D100	25	100	0,26
104821	MKS25-AK24-2-D150	25	150	0,32
104822	MKS25-AK24-2-D200	25	200	0,40
104823	MKS25-AK24-2-D250	25	250	0,47
105075	MKS25-AK24-2-D300	25	300	0,54
104828	MKS30-AK24-2-D100	30	100	0,28
104829	MKS30-AK24-2-D150	30	150	0,37
104830	MKS30-AK24-2-D200	30	200	0,45
104831	MKS30-AK24-2-D250	30	250	0,54
105076	MKS30-AK24-2-D300	30	300	0,62

Description	Part No.
MKSXX-AK24-XXX	see table

Type: flange with tube

Material: steel

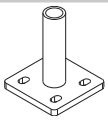

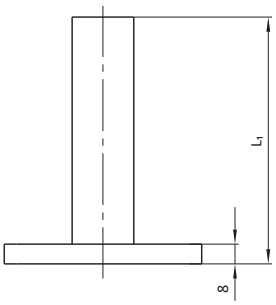

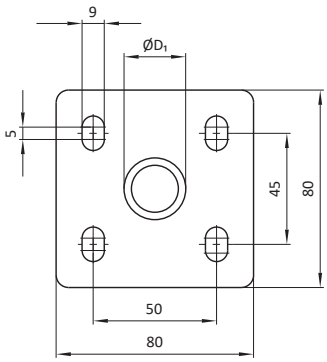

Part No.	Description	D_1 [mm]	L_1 [mm]	m [kg]
14367	MKS20-AK24-100	20	100	0,50
14368	MKS20-AK24-125	20	125	0,55
14369	MKS20-AK24-150	20	150	0,58
14370	MKS20-AK24-175	20	175	0,62
14371	MKS20-AK24-200	20	200	0,66
14372	MKS20-AK24-225	20	225	0,71
14373	MKS20-AK24-250	20	250	0,75
104359	MKS20-AK24-300	20	300	0,80
106798	MKS20-AK24-400	20	400	0,85
12935	MKS25-AK24-100	25	100	0,50
12936	MKS25-AK24-125	25	125	0,54
12937	MKS25-AK24-150	25	150	0,58
12938	MKS25-AK24-175	25	175	0,62
12939	MKS25-AK24-200	25	200	0,66
12940	MKS25-AK24-225	25	225	0,70
12941	MKS25-AK24-250	25	250	0,74
16630	MKS25-AK24-300	25	300	0,83
16908	MKS25-AK24-350	25	350	0,91
16909	MKS25-AK24-400	25	400	0,99
16910	MKS25-AK24-450	25	450	1,10
16911	MKS25-AK24-500	25	500	1,15
15158	MKS30-AK24-100	30	100	0,52
15159	MKS30-AK24-125	30	125	0,57
15160	MKS30-AK24-150	30	150	0,62
15161	MKS30-AK24-200	30	200	0,72
15162	MKS30-AK24-250	30	250	0,82
104360	MKS30-AK24-300	30	300	0,92
104700	MKS30-AK24-650	30	650	1,62

Mounting for Gripper Rail

Description	Part No.
MKSXX-AK126-EXXX	see table

Type: flange with tube

Material: steel

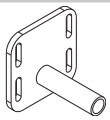

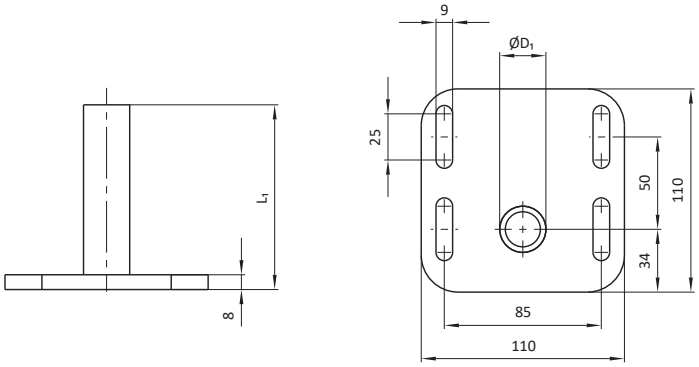

Article No.	Description	D_1 [mm]	L_1 [mm]	m [kg]
102516	MKS20-AK126-E100	20	100	0,78
102517	MKS20-AK126-E150	20	150	0,84
102518	MKS20-AK126-E200	20	200	0,90
102519	MKS20-AK126-E300	20	300	1,03
106354	MKS25-AK126-E100	25	100	0,80
106355	MKS25-AK126-E150	25	150	0,88
106356	MKS25-AK126-E200	25	200	0,96
106357	MKS25-AK126-E300	25	300	1,13
111149	MKS30-AK126-C200	30	200	0,89
111150	MKS30-AK126-C300	30	300	1,03

Description	Part No.
MKS20-AK126-1-BXXX	see table

Type: flange with tube

Material: steel

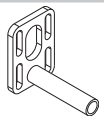

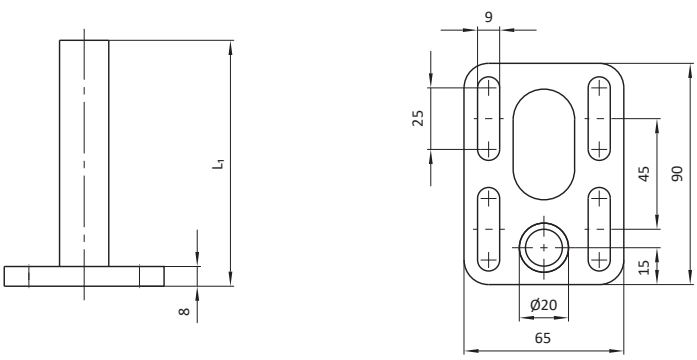

Part No.	Description	L_1 [mm]	m [kg]
106555	MKS20-AK126-1-B075	75	0,22
106472	MKS20-AK126-1-B100	100	0,24
106473	MKS20-AK126-1-B150	150	0,27
106474	MKS20-AK126-1-B200	200	0,31
106475	MKS20-AK126-1-B250	250	0,34

Description	Part No.
MKS20-AK129-EXXX	see table

Type: flange with tube

Material: steel

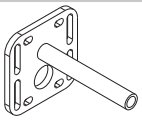

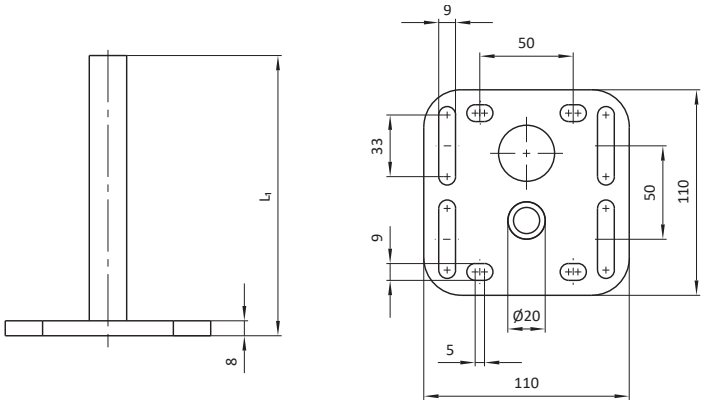

Part No.	Description	L_1 [mm]	m [kg]
103380	MKS20-AK129-E150	150	0,74
103036	MKS20-AK129-E180	180	0,78
106864	MKS20-AK129-E275	275	0,90

Description	Part No.
MKS20-AK54-XXX	see table

Type: flange with tube

Material: steel

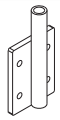

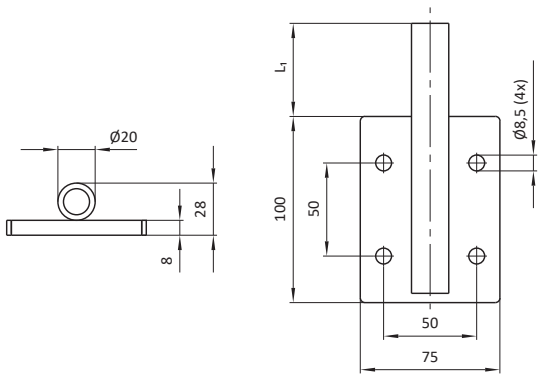

Part No.	Description	L_1 [mm]	m [kg]
14322	MKS20-AK54-050	50	0,64
14323	MKS20-AK54-075	75	0,67
14324	MKS20-AK54-100	100	0,70
14325	MKS20-AK54-150	150	0,77
14326	MKS20-AK54-200	200	0,83
14327	MKS20-AK54-250	250	0,89
14328	MKS20-AK54-300	300	0,95
14329	MKS20-AK54-350	350	1,02
14330	MKS20-AK54-400	400	1,08
14331	MKS20-AK54-450	450	1,14
14332	MKS20-AK54-500	500	1,21

Mounting for Gripper Rail

Description	Part No.
MKS20-AK53-XXX	see table

Type: angle with tube

Material: steel

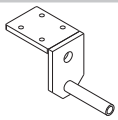

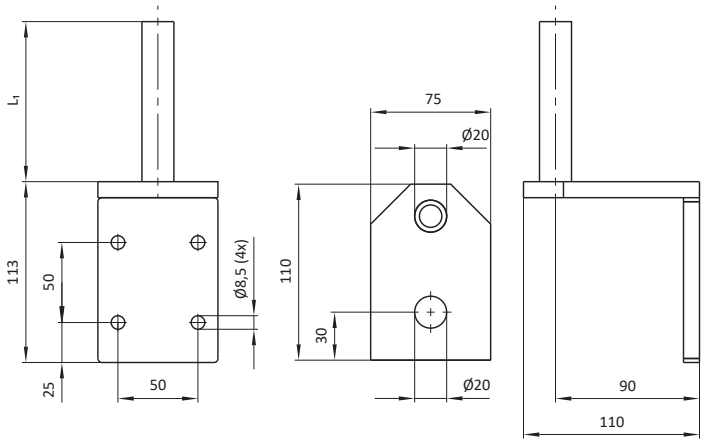

Part No.	Description	L_1 [mm]	m [kg]
14469	MKS20-AK53-100	100	1,28
14470	MKS20-AK53-150	150	1,34
14471	MKS20-AK53-200	200	1,40
14472	MKS20-AK53-250	250	1,47
14473	MKS20-AK53-300	300	1,53

Description	Part No.
MKSXX-AK93-XXX	see table

Type: flange with tube angle

Material: steel

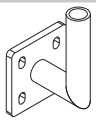

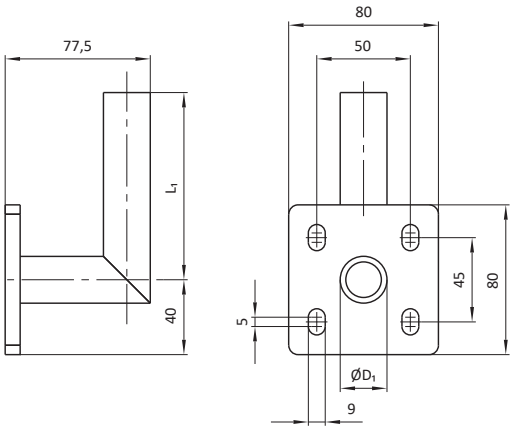

Part No.	Description	D_1 [mm]	L_1 [mm]	m [kg]
15565	MKS20-AK93-100	20	100	0,56
15566	MKS20-AK93-125	20	125	0,59
15567	MKS20-AK93-150	20	150	0,62
15568	MKS20-AK93-200	20	200	0,68
15569	MKS20-AK93-250	20	250	0,75
15560	MKS25-AK93-100	25	100	0,61
15561	MKS25-AK93-125	25	125	0,65
15562	MKS25-AK93-150	25	150	0,69
15563	MKS25-AK93-200	25	200	0,77
15564	MKS25-AK93-250	25	250	0,86
15551	MKS30-AK93-100	30	100	0,65
15552	MKS30-AK93-125	30	125	0,70
15553	MKS30-AK93-150	30	150	0,75
15554	MKS30-AK93-200	30	200	0,85
15555	MKS30-AK93-250	30	250	0,95

Description	Part No.
MKS20-AK21-XXX	see table

Type: flange with tube

Material: steel



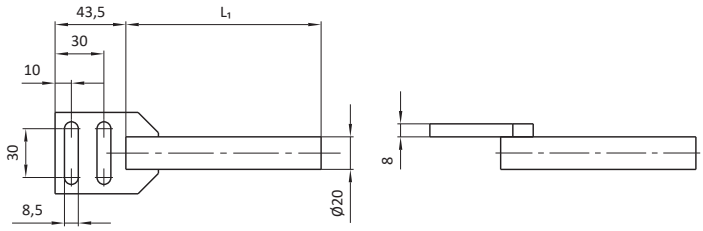

Part No.	Description	L_1 [mm]	m [kg]
10703	MKS20-AK21-100	100	0,31
10704	MKS20-AK21-125	125	0,34
10705	MKS20-AK21-150	150	0,37
10706	MKS20-AK21-175	175	0,40
10707	MKS20-AK21-200	200	0,43
10708	MKS20-AK21-225	225	0,46
10709	MKS20-AK21-250	250	0,49

Mounting for Gripper Rail

Description	Part No.
MKS30-AK24-KAR	103149

Type: flange with clamp seat

Material: steel

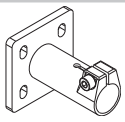

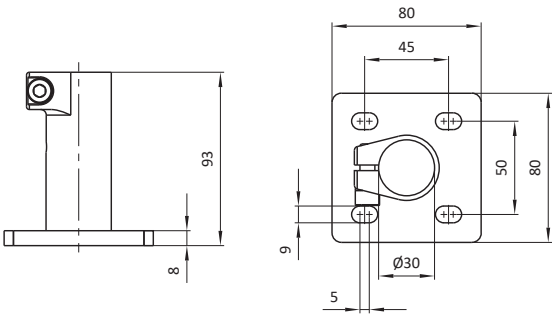

Part No.	Description	m [kg]
103149	MKS30-AK24-KAR	0,54

Description	Part No.
MKS30-AK121-X	see table

Type: flange with clamp seat

Material: steel

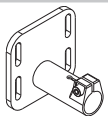

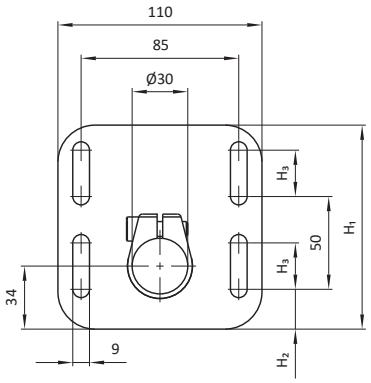

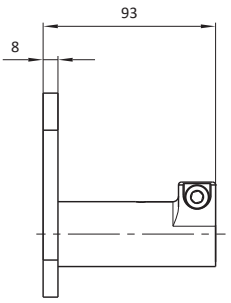

Part No.	Description	H_1 [mm]	H_2 [mm]	H_3 [mm]	m [kg]
101921	MKS30-AK121	110	21,5	25	0,82
102621	MKS30-AK121-1	135	36,5	35	0,97

Description	Part No.
MKSXX-AK121	see table

Type: flange with clamp seat

Material: steel

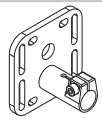

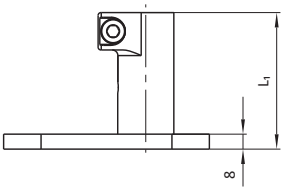

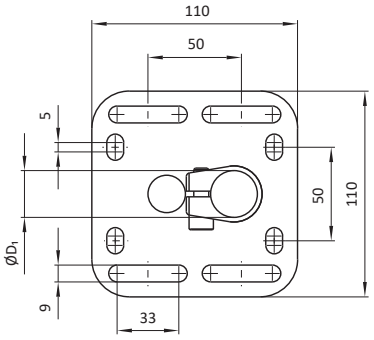

Part No.	Description	D_1 [mm]	L_1 [mm]	m [kg]
105716	MKS20-AK121	20	63	0,69
101942	MKS25-AK121	25	73	0,77

Description	Part No.
MKS30-AK121-2	103242

Type: flange with clamp seat

Material: steel

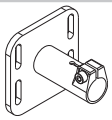

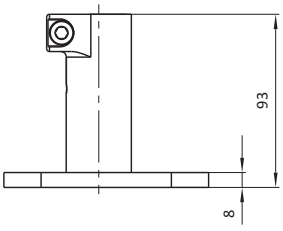

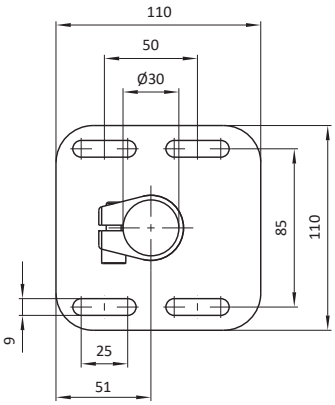

Part No.	Description	m [kg]
103242	MKS30-AK121-2	0,83

Mounting for Gripper Rail

Description	Part No.
MKSXX-AK05-X-XXX	see table

Type: flange with tube

Material: steel

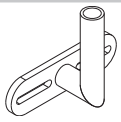

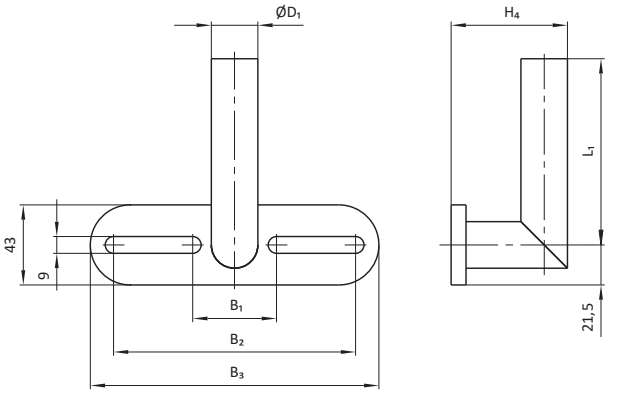

Part No.	Description	D_1 [mm]	B_1 [mm]	B_2 [mm]	B_3 [mm]	H_4 [mm]	L_1 [mm]	m [kg]
13397	MKS20-AK05-K-100	20	40	130	155	60	100	0,53
13398	MKS20-AK05-K-150	20	40	130	155	60	150	0,56
13399	MKS20-AK05-K-200	20	40	130	155	60	200	0,63
13400	MKS20-AK05-K-250	20	40	130	155	60	250	0,70
10723	MKS20-AK05-L/R-100	20	40	130	155	95	100	0,54
10724	MKS20-AK05-L/R-150	20	40	130	155	95	150	0,60
10725	MKS20-AK05-L/R-200	20	40	130	155	95	200	0,66
10726	MKS20-AK05-L/R-250	20	40	130	155	95	250	0,74
15421	MKS25-AK05-K-100	25	45	130	155	62,5	100	0,65
15422	MKS25-AK05-K-150	25	45	130	155	62,5	150	0,73
15423	MKS25-AK05-K-200	25	45	130	155	62,5	200	0,81
15424	MKS25-AK05-K-250	25	45	130	155	62,5	250	0,89
101238	MKS30-AK05-K-100	30	58	150	180	68	100	0,66
101239	MKS30-AK05-K-150	30	58	150	180	68	150	0,76
101240	MKS30-AK05-K-200	30	58	150	180	68	200	0,86
101241	MKS30-AK05-K-250	30	58	150	180	68	250	0,96
10731	MKS30-AK05-L/R-100	30	58	150	180	100	100	0,72
10732	MKS30-AK05-L/R-150	30	58	150	180	100	150	0,82
10733	MKS30-AK05-L/R-200	30	58	150	180	100	200	0,92
10734	MKS30-AK05-L/R-250	30	58	150	180	100	250	1,02

Description	Part No.
MKSXX-AK04-XXX	see table

Type: flange with tube

Material: steel

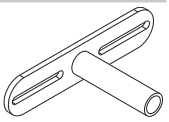

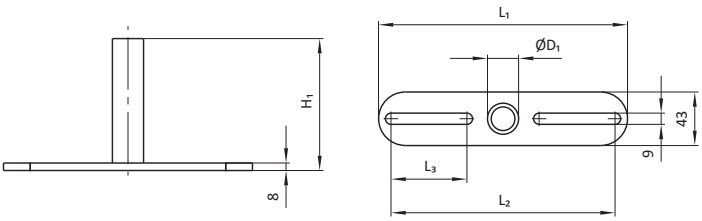

Part No.	Description	D_1 [mm]	H_1 [mm]	L_1 [mm]	L_2 [mm]	L_3 [mm]	m [kg]
13126	MKS20-AK04-075	20	75	155	130	45	0,41
10663	MKS20-AK04-100	20	100	155	130	45	0,44
13127	MKS20-AK04-125	20	125	155	130	45	0,47
10664	MKS20-AK04-150	20	150	155	130	45	0,51
10665	MKS20-AK04-200	20	200	155	130	45	0,56
10666	MKS20-AK04-250	20	250	155	130	45	0,61
17374	MKS20-AK04-300	20	300	155	130	45	0,69
10674	MKS25-AK04-100	25	100	155	130	42,5	0,47
10675	MKS25-AK04-150	25	150	155	130	42,5	0,55
10676	MKS25-AK04-200	25	200	155	130	42,5	0,63
10677	MKS25-AK04-250	25	250	155	130	42,5	0,71
10678	MKS30-AK04-100	30	100	180	150	46	0,52
10679	MKS30-AK04-150	30	150	180	150	46	0,61
10680	MKS30-AK04-200	30	200	180	150	46	0,69
10681	MKS30-AK04-250	30	250	180	150	46	0,77
16903	MKS30-AK04-300	30	300	180	150	46	0,86

Technical changes and errors are subject to change without notice!
www.springer.group
Document Date: CWCW 12.2025

Mounting for Gripper Rail

Description	Part No.
MKSXX-AK04-L/R-XXX	see table

Type: flange with tube angle

Material: steel

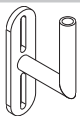

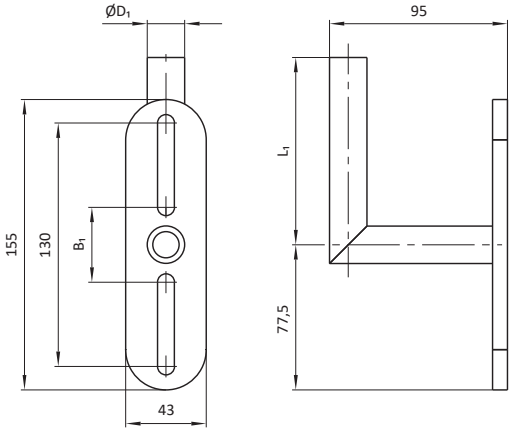

Part No.	Description	D_1 [mm]	B_1 [mm]	L_1 [mm]	m [kg]
10687	MKS20-AK04-L/R-100	20	40	100	0,55
10688	MKS20-AK04-L/R-150	20	40	150	0,62
10689	MKS20-AK04-L/R-200	20	40	200	0,66
10690	MKS20-AK04-L/R-250	20	40	250	0,72
10695	MKS30-AK04-L/R-100	30	50	100	0,79
10696	MKS30-AK04-L/R-150	30	50	150	0,84
10697	MKS30-AK04-L/R-200	30	50	200	0,89
10698	MKS30-AK04-L/R-250	30	50	250	1,04
100680	MKS30-AK04-L/R-300	30	50	300	1,09
19985	MKS30-AK04-L/R-350	30	50	350	1,14

Description	Part No.
MKSXX-AKXX-XXX	see table

Type: flange with tube

Material: steel

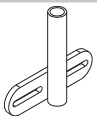

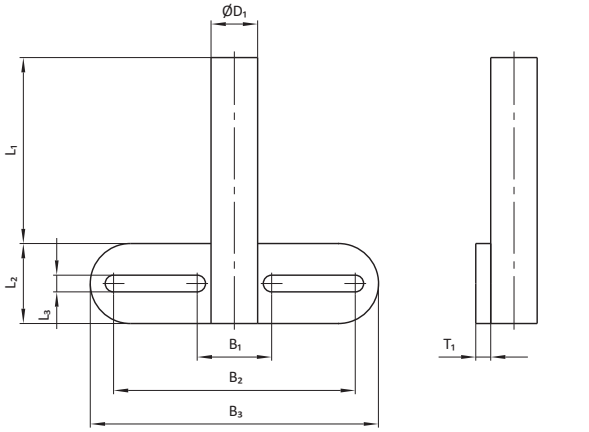

Part No.	Description	D_1 [mm]	B_1 [mm]	B_2 [mm]	B_3 [mm]	L_1 [mm]	L_2 [mm]	L_3 [mm]	T_1 [mm]	m [kg]
10699	MKS20-AK05-100	20	40	130	155	100	43	9	8	0,52
10700	MKS20-AK05-150	20	40	130	155	150	43	9	8	0,58
10701	MKS20-AK05-200	20	40	130	155	200	43	9	8	0,65
10702	MKS20-AK05-250	20	40	130	155	250	43	9	8	0,72
101091	MKS20-AK05-300	20	40	130	155	300	43	9	8	0,78
103475	MKS20-AK05-400	20	40	130	155	400	43	9	8	0,90
101174	MKS20-AK05-1-100	20	58	180	200	100	43	9	6	0,45
101175	MKS20-AK05-1-150	20	58	180	200	150	43	9	6	0,51
101176	MKS20-AK05-1-200	20	58	180	200	200	43	9	6	0,56
101177	MKS20-AK05-1-250	20	58	180	200	250	43	9	6	0,61
102226	MKS20-AK122-E-100	20	40	120	135	100	43	8,5	6	0,36
102227	MKS20-AK122-E-150	20	40	120	135	150	43	8,5	6	0,42
102228	MKS20-AK122-E-200	20	40	120	135	200	43	8,5	6	0,48
102229	MKS20-AK122-E-250	20	40	120	135	250	43	8,5	6	0,54
104678	MKS20-AK133-E100	20	38	58	80	100	40	8,5	6	0,30
10710	MKS25-AK05-100	25	40	130	130	100	43	9	8	0,57
10711	MKS25-AK05-150	25	40	130	130	150	43	9	8	0,65
10712	MKS25-AK05-200	25	40	130	130	200	43	9	8	0,73
10713	MKS25-AK05-250	25	40	130	130	250	43	9	8	0,81
17280	MKS25-AK05-300	25	40	130	130	300	43	9	8	0,89
103476	MKS25-AK05-400	25	40	130	130	400	43	9	8	1,06
10714	MKS30-AK05-100	30	58	150	180	100	43	9	8	0,70
10715	MKS30-AK05-150	30	58	150	180	150	43	9	8	0,81
10716	MKS30-AK05-200	30	58	150	180	200	43	9	8	0,89
10717	MKS30-AK05-250	30	58	150	180	250	43	9	8	0,99
12747	MKS30-AK05-300	30	58	150	180	300	43	9	8	1,10
12748	MKS30-AK05-350	30	58	150	180	350	43	9	8	1,20
12749	MKS30-AK05-400	30	58	150	180	400	43	9	8	1,30

Mounting for Gripper Rail

Description	Part No.
MKS30-AK08-XXX	see table

Type: flange with 2 tubes

Material: steel

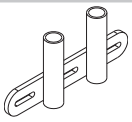

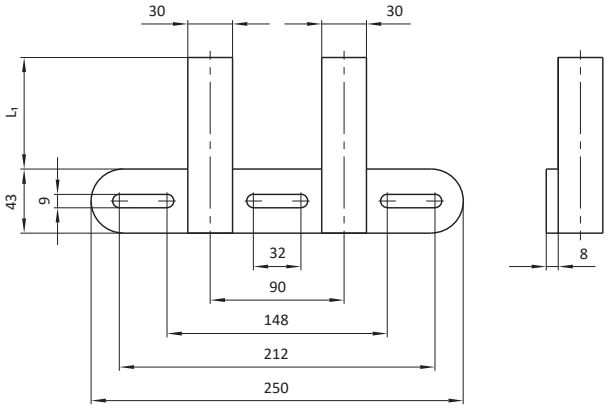

Part No.	Description	L_1 [mm]
13976	MKS30-AK08-075	75
13977	MKS30-AK08-100	100
13978	MKS30-AK08-150	150
13979	MKS30-AK08-200	200
13980	MKS30-AK08-250	250

Description	Part No.
MKS20-AK139-KAR	106676

Type: flange with clamp seat (adjustable)

Material: steel

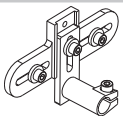

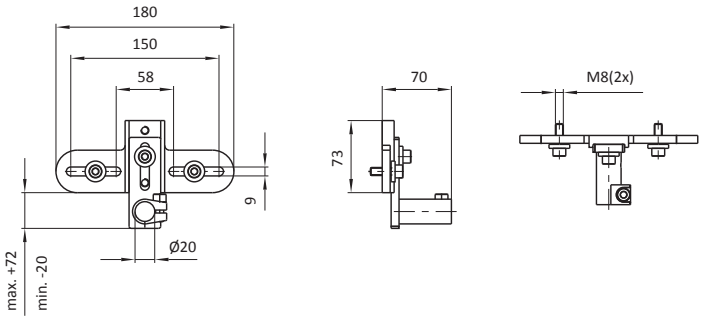

Part No.	Description	m [kg]
106676	MKS20-AK139-KAR	0,76

Description	Part No.
MKSXX-AK06-L/R	see table

Type: flange with rod journal

Material: steel

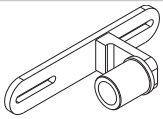

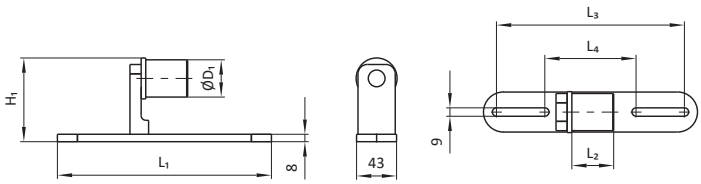

Part No.	Description	D_1 [mm]	H_1 [mm]	L_1 [mm]	L_2 [mm]	L_3 [mm]	L_4 [mm]	m [kg]
12700	MKS30-AK06-L/R	30	76	180	40	152	88	0,86
12236	MKS40-AK06-L/R	40	90	230	45	202	98	1,14

Mounting for Robot Arm

Description	Part No.
MKS60-GRA14-1	15230

Type: for robot, fixed side, with clamp seat

Material: steel

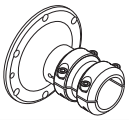

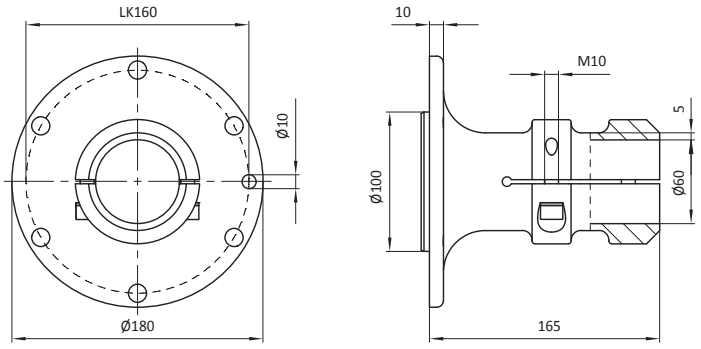

Part No.	Description	m [kg]
15230	MKS60-GRA14-1	5,18

Description	Part No.
MKS60-GRA14-2-AL	107623

Type: for robot, fixed side, with clamp seat

Material: steel

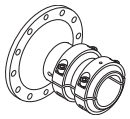

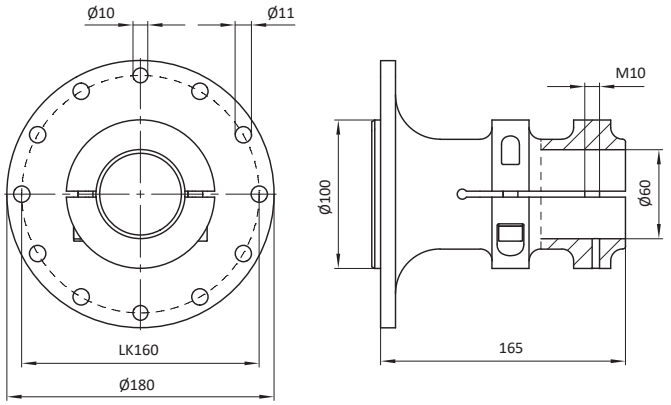

Part No.	Description	m [kg]
107623	MKS60-GRA14-2-AL	1,71

Description	Part No.
MKS60-GRA16	17634

Type: for robot, fixed side, with clamp seat 90°

Material: steel

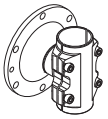

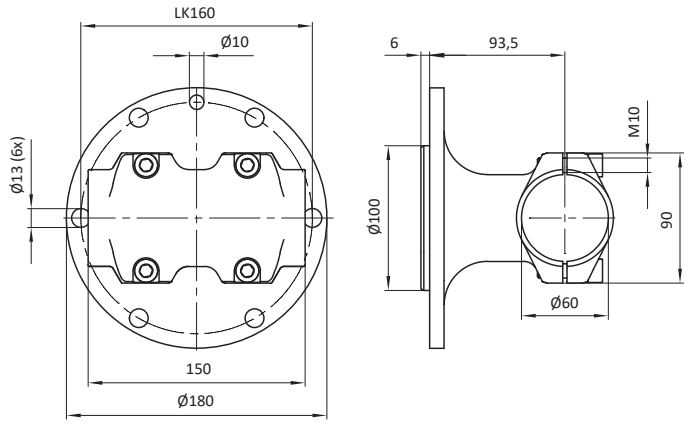

Part No.	Description	m [kg]
17634	MKS60-GRA16	4,85

Description	Part No.
MKS60-GRA14-XX	see table

Type: for robot, fixed side, with clamp seat, light weight design

Material: see table

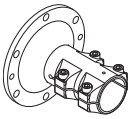

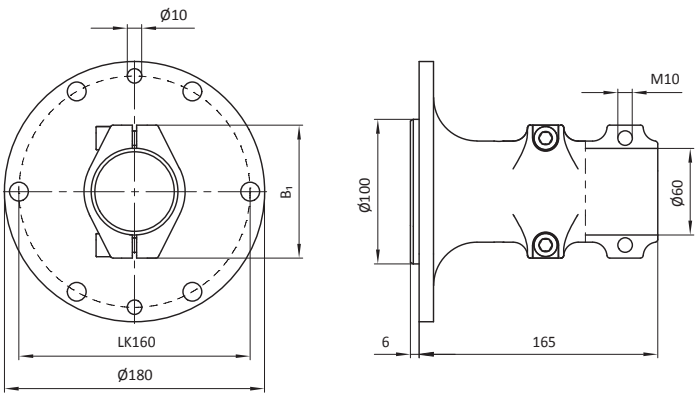

Part No.	Description	B_1 [mm]	m [kg]	Material
14636	MKS60-GRA14	92	3,53	D
15186	MKS60-GRA14-AL	89	1,33	B

Material
B → aluminium
D → steel

Mounting for Robot Arm

Description	Part No.
MKS60-GRA15-XX	see table

Type: for robot, fixed side, with clamp seat

Material: see table

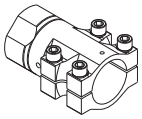

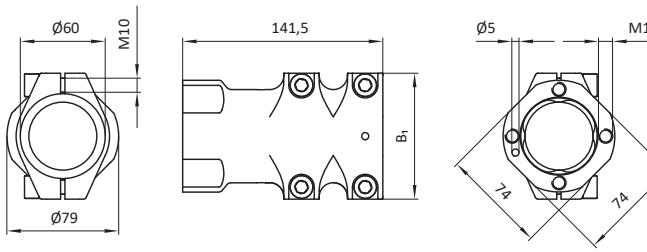

Part No.	Description	B_1 [mm]	m [kg]	Material
16764	MKS60-GRA15	98	1,57	D
105272	MKS60-GRA15-AL	97	1,03	A

Description	Part No.
MKS60-GAKP10	101462

Type: splitted clamps with plate

Material: material mix

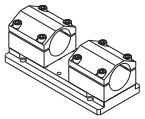

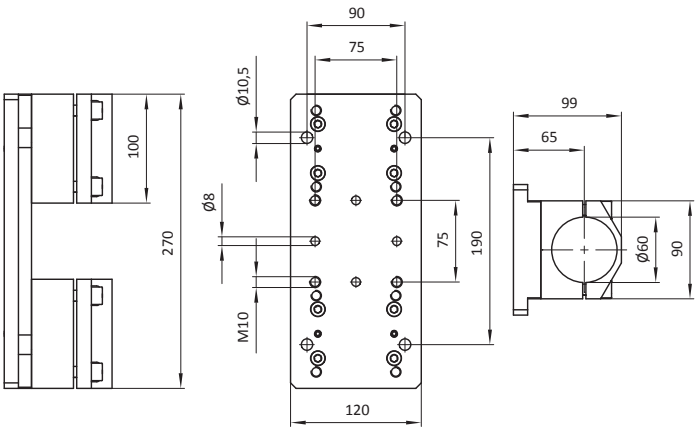

Part No.	Description	m [kg]
101462	MKS60-GAKP10	4,00

Description	Part No.
MKS60-GAKP18	15024

Type: splitted clamp with plate

Material: material mix

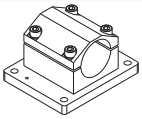

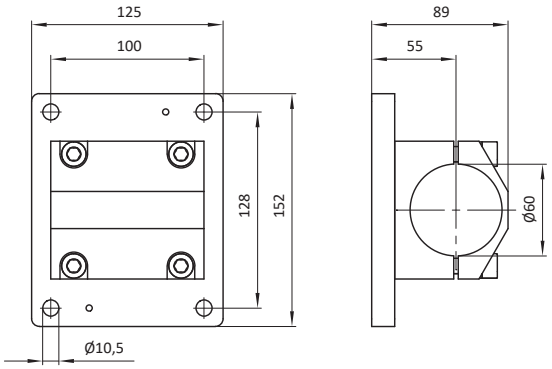

Part No.	Description	m [kg]
15024	MKS60-GAKP18	4,50

Description	Part No.
MKS40-GAKP10	17829

Type: splitted clamps with plate

Material: material mix

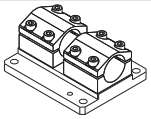

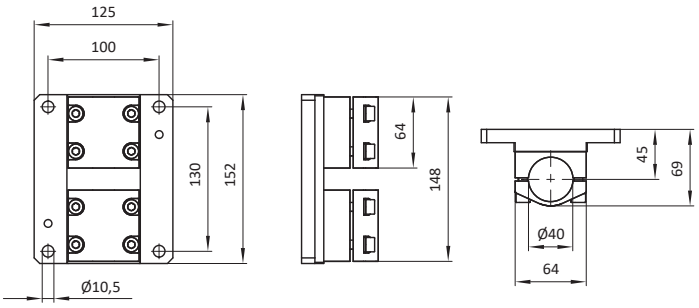

Part No.	Description	m [kg]
17829	MKS40-GAKP10	2,10

Material
A → aluminium
D → steel

Technical changes and errors are subject to change without notice!
www.springer.group
Document Date: CWCW 12.2025

Splitted Clamp and Clamp Fixed

Description	Part No.
MKS60-KS12	19946

Type: for feeder tooling

Material: material mix

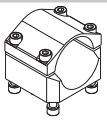

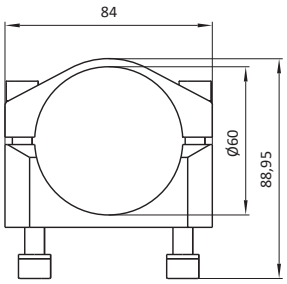

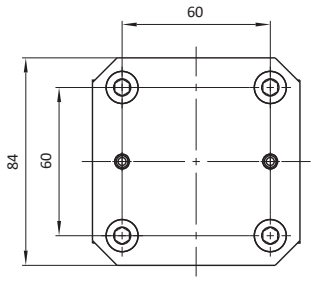

Part No.	Description	m [kg]
19946	MKS60-KS12	0,76

Description	Part No.
MKS40-KS17	101832

Type: for suction spider

Material: material mix

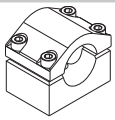

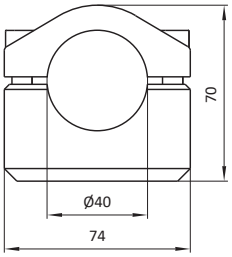

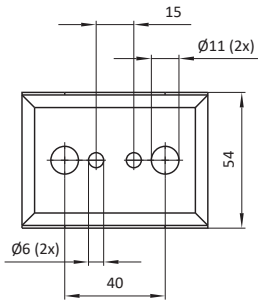

Part No.	Description	m [kg]
101832	MKS40-KS17	0,71

Description	Part No.
MKSXX-KS05	see table

Type: for vacuum mounting

Material: steel

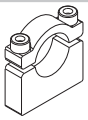

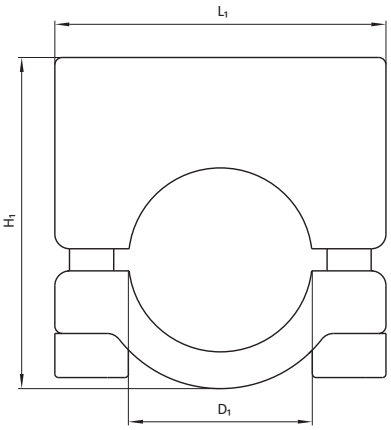

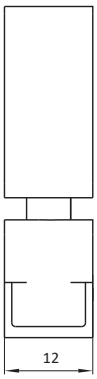

Part No.	Description	D_1 [mm]	H_1 [mm]	L_1 [mm]	m [kg]
15088	MKS20-KS05	20	40	40	0,11
15089	MKS25-KS05	25	45	45	0,12
15090	MKS30-KS05	30	50	50	0,14
15195	MKS40-KS05	40	60	65	0,21
15197	MKS60-KS05	60	80	80	0,25

Description	Part No.
MKS60-KS02	14794

Type: for gripper arm

Material: steel

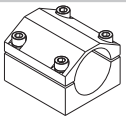

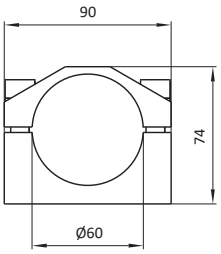

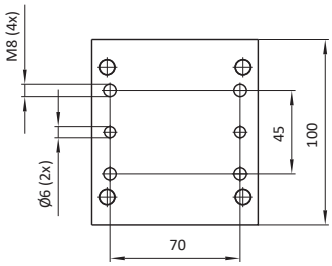

Part No.	Description	m [kg]
14794	MKS60-KS02	2,35

Splitted Clamp and Clamp Fixed

Description	Part No.
MKSXX-RA03	see table

Type: clamp fixed with plate

Material: steel

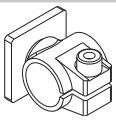

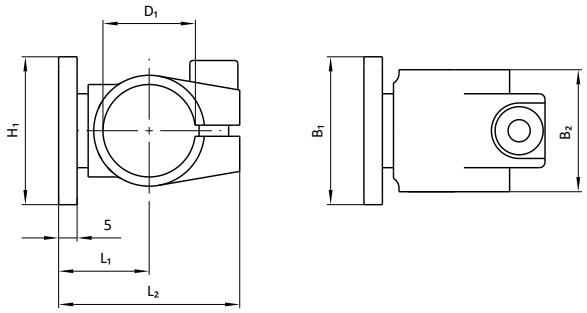

Part No.	Description	D_1 [mm]	H_1 [mm]	B_1 [mm]	B_2 [mm]	L_1 [mm]	L_2 [mm]	m [kg]
14951	MKS20-RA03	20	35	35	28	19,5	44	0,14
17133	MKS25-RA03	25	40	40	33	24,5	49	0,20
15847	MKS30-RA03	30	45	45	38	24,5	52,5	0,25

T-Connector

Description	Part No.
MKSXX/XX-TV03-XXXX	see table

Type: with clamp fixed 90°, straight, with tube

Material: steel

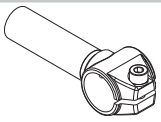

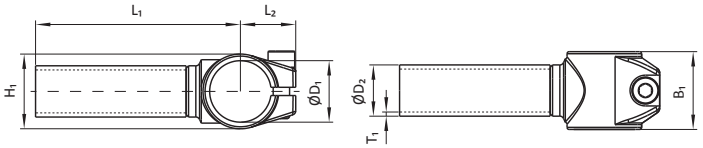

Part No.	Description	D_1 [mm]	D_2 [mm]	B_1 [mm]	L_1 [mm]	L_2 [mm]	T_1 [mm]	m [kg]
10007	MKS20/20-TV03-100	20	20	28	100	22	2,5	0,19
10009	MKS20/20-TV03-200	20	20	28	200	22	2,5	0,24
10011	MKS20/20-TV03-300	20	20	28	300	22	2,5	0,40
10013	MKS20/20-TV03-400	20	20	28	400	22	2,5	0,50
10015	MKS20/20-TV03-500	20	20	28	500	22	2,5	0,61
10017	MKS20/20-TV03-600	20	20	28	600	22	2,5	0,73
11990	MKS25/20-TV03-D100	25	20	33	100	24,5	2,5	0,22
11992	MKS25/20-TV03-D200	25	20	33	200	24,5	2,5	0,32
11994	MKS25/20-TV03-D300	25	20	33	300	24,5	2,5	0,44
11996	MKS25/20-TV03-D400	25	20	33	400	24,5	2,5	0,54
11998	MKS25/20-TV03-D500	25	20	33	500	24,5	2,5	0,65
12000	MKS25/20-TV03-D600	25	20	33	600	24,5	2,5	0,76
10019	MKS25/25-TV03-100	25	25	33	100	24,5	2,5	0,25
10021	MKS25/25-TV03-200	25	25	33	200	24,5	2,5	0,39
10023	MKS25/25-TV03-300	25	25	33	300	24,5	2,5	0,53
10025	MKS25/25-TV03-400	25	25	33	400	24,5	2,5	0,67
10027	MKS25/25-TV03-500	25	25	33	500	24,5	2,5	0,81
10029	MKS25/25-TV03-600	25	25	33	600	24,5	2,5	0,95
103452	MKS25/25-TV03-700	25	25	33	700	24,5	2,5	1,09
10031	MKS30/20-TV03-100	30	20	38	100	27	2,5	0,26
10033	MKS30/20-TV03-200	30	20	38	200	27	2,5	0,37
10035	MKS30/20-TV03-300	30	20	38	300	27	2,5	0,48
10037	MKS30/20-TV03-400	30	20	38	400	27	2,5	0,58
10039	MKS30/20-TV03-500	30	20	38	500	27	2,5	0,71
10041	MKS30/20-TV03-600	30	20	38	600	27	2,5	0,80
10043	MKS30/25-TV03-100	30	25	38	100	27	2,5	0,29
10045	MKS30/25-TV03-200	30	25	38	200	27	2,5	0,43
10047	MKS30/25-TV03-300	30	25	38	300	27	2,5	0,56
10049	MKS30/25-TV03-400	30	25	38	400	27	2,5	0,70
10051	MKS30/25-TV03-500	30	25	38	500	27	2,5	0,84
10053	MKS30/25-TV03-600	30	25	38	600	27	2,5	0,98
10055	MKS30/30-TV03-100	30	30	38	100	27	2,5	0,31
10057	MKS30/30-TV03-200	30	30	38	200	27	2,5	0,48
10059	MKS30/30-TV03-300	30	30	38	300	27	2,5	0,65
10061	MKS30/30-TV03-400	30	30	38	400	27	2,5	0,82
10063	MKS30/30-TV03-500	30	30	38	500	27	2,5	1,00
10065	MKS30/30-TV03-600	30	30	38	600	27	2,5	1,16
106110	MKS30/30-TV03-C100	30	30	38	100	27	2	0,28
106114	MKS30/30-TV03-C200	30	30	38	200	27	2	0,42
106116	MKS30/30-TV03-C300	30	30	38	300	27	2	0,56
106118	MKS30/30-TV03-C400	30	30	38	400	27	2	0,70
106120	MKS30/30-TV03-C500	30	30	38	500	27	2	0,83
10067	MKS40/25-TV03-100	40	25	40	100	32	2,5	0,35
10069	MKS40/25-TV03-200	40	25	40	200	32	2,5	0,43
10071	MKS40/25-TV03-300	40	25	40	300	32	2,5	0,55
10073	MKS40/25-TV03-400	40	25	40	400	32	2,5	0,67
10075	MKS40/25-TV03-500	40	25	40	500	32	2,5	0,89
10077	MKS40/25-TV03-600	40	25	40	600	32	2,5	0,98
10079	MKS40/30-TV03-100	40	30	40	100	32	2,5	0,25
10081	MKS40/30-TV03-200	40	30	40	200	32	2,5	0,46
10083	MKS40/30-TV03-300	40	30	40	300	32	2,5	0,67
10085	MKS40/30-TV03-400	40	30	40	400	32	2,5	0,88
10087	MKS40/30-TV03-500	40	30	40	500	32	2,5	10,5
10089	MKS40/30-TV03-600	40	30	40	600	32	2,5	1,22
13577	MKS40/30-TV03-800	40	30	40	800	32	2,5	1,51

Description	Part No.
MKS25/25-TV05-XXX	see table

Type: with clamp splitted, straight, with tube

Material: steel

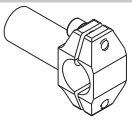

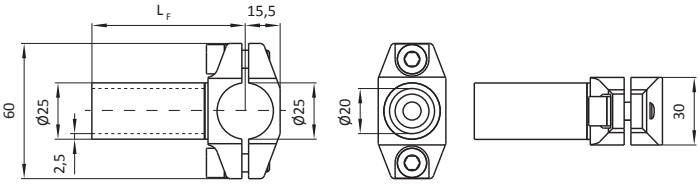

Part No.	Description	L_1 [mm]	m [kg]
10247	MKS25/25-TV05-100	100	0,31
10249	MKS25/25-TV05-200	200	0,45
10251	MKS25/25-TV05-300	300	0,59
10253	MKS25/25-TV05-400	400	0,74
10255	MKS25/25-TV05-500	500	0,88
10257	MKS25/25-TV05-600	600	1,00

Description	Part No.
MKS25/25-TV11	14241

Type: with hinged clamp, straight, clamp seat

Material: steel

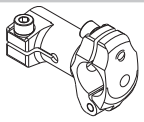

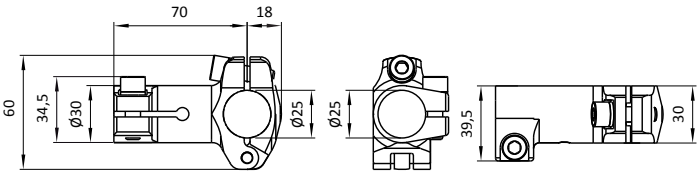

Part No.	Description	m [kg]
14241	MKS25/25-TV11	0,35

T-Connector

Description	Part No.
MKS25/25-TV11-XX°-L	see table

Type: with hinged clamp, left, clamp seat

Material: steel

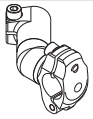

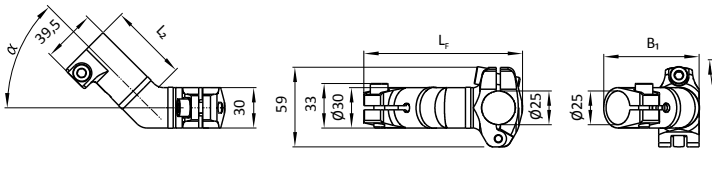

Part No.	Description	B_1 [mm]	L_F [mm]	L_2 [mm]	α [°]	m [kg]
14232	MKS25/25-TV11-30°-L	59	106	58	30	0,41
14234	MKS25/25-TV11-45°-L	69,4	103	55,6	45	0,40
100265	MKS25/25-TV11-60°-L	66,5	96	52	60	0,30

Description	Part No.
MKS25/25-TV11-XX°-R	see table

Type: with hinged clamp, right, clamp seat

Material: steel

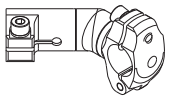

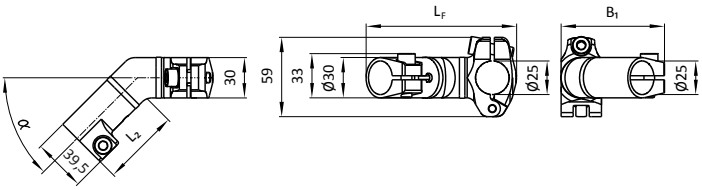

Part No.	Description	B_1 [mm]	L_F [mm]	L_2 [mm]	α [°]	m [kg]
14233	MKS25/25-TV11-30°-R	59	106	58	30	0,41
14235	MKS25/25-TV11-45°-R	69,4	103	55,6	45	0,40
100266	MKS25/25-TV11-60°-R	66,5	96	52	60	0,30

Description	Part No.
MKSXX/XX-TV11-XXXX	see table

Type: with hinged clamp splitted, straight, with clamp seat

Material: hybrid

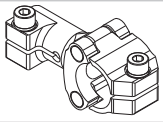

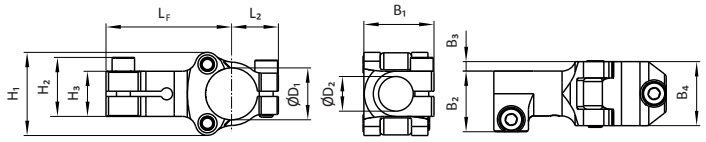

Part No.	Description	D_1 [mm]	D_2 [mm]	H_1 [mm]	H_2 [mm]	H_3 [mm]	B_1 [mm]	B_2 [mm]	B_3 [mm]	L_F [mm]	L_2 [mm]	m [kg]
16790	MKS30/20-TV11	30	20	48	34	26	41	35	6	72,5	27	0,26
107290	MKS30/20-TV11-OGRE	30	20	48	34	26	41	35	6	72,5	27	0,26
101565	MKS40/20-TV11	40	20	62	35	26	41	35	6	85	32	0,34
106951	MKS40/20-TV11-1	40	20	62	35	26	41	35	6	85	32	0,34
101468	MKS30/25-TV11	30	25	50	38	31	44,5	41	3,5	80	27	0,26
104141	MKS30/25-TV11-OGRE	30	25	50	38	31	44,5	41	3,5	80	27	0,26
12560	MKS40/25-TV11	40	25	58	38	31	37,5	44,5	3,5	85	32	0,34
104872	MKS40/25-TV11-OGRE	40	25	58	38	31	37,5	44,5	3,5	85	32	0,34
102741	MKS40/40-TV11	40	40	58	49	46	55	-	-	85	32	0,37

Description	Part No.
MKSXX/XX-TV11-XX°-L-XXXX	see table

Type: with hinged clamp splitted, left, with clamp seat

Material: hybrid

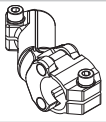

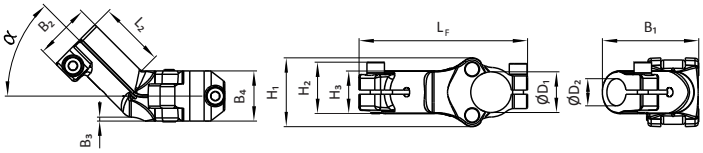

Art.-Nr.	Description	D_1 [mm]	D_2 [mm]	H_1 [mm]	H_2 [mm]	H_3 [mm]	B_1 [mm]	B_2 [mm]	B_3 [mm]	B_4 [mm]	L_F [mm]	L_2 [mm]	α [°]	m [kg]
107286	MKS30/20-TV11-30°-L-OGRE	30	20	53,5	38,5	31	61	41	1	37	128,5	50	30	0,36
107288	MKS30/20-TV11-45°-L-OGRE	30	20	50,5	38,5	31	70,6	41	3	37	124	46,5	45	0,35
101566	MKS40/20-TV11-30°-L	40	20	63	35	26	60	34,5	5	37	136	51	30	0,31
106952	MKS40/20-TV11-30°-L-1	40	20	63	35	26	60	34,5	5	37	136	51	30	0,31
101568	MKS40/20-TV11-45°-L	40	20	63	35	26	69,5	35	3	37	131	42	45	0,31
106954	MKS40/20-TV11-45°-L-1	40	20	63	35	26	69,5	35	3	37	131	42	45	0,31
105688	MKS30/25-TV11-15°-L-OGRE	30	25	53	37,5	31	48,5	41	1,5	37	127	50	15	0,32
104169	MKS30/25-TV11-30°-L-OGRE	30	25	53	37,5	31	60,5	41	1	37	128,5	50	30	0,33
104171	MKS30/25-TV11-45°-L-OGRE	30	25	53	37,5	31	100,5	41	3	37	124,5	46,5	45	0,3
106806	MKS40/25-TV11-15°-L-OGRE	40	25	58	38	31	48,5	41	2	37	138,5	50	15	0,36
100921	MKS40/25-TV11-30°-L	40	25	58	38	31	61,5	41	2	37	138	49	30	0,36
105160	MKS40/25-TV11-30°-L-OGRE	40	25	58	38	31	61,5	41	2	37	138	49	30	0,36
100923	MKS40/25-TV11-45°-L	40	25	58	38	31	71	41	2	37	134,5	48	45	0,36
105162	MKS40/25-TV11-45°-L-OGRE	40	25	58	38	31	71	41	2	37	134,5	48	45	0,36

T-Connector

Description	Part No.
MKSXX/XX-TV11-XX°-R-XXXX	see table

Type: with hinged clamp splitted, right, with clamp seat

Material: Hybrid

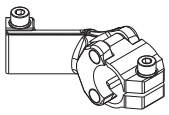

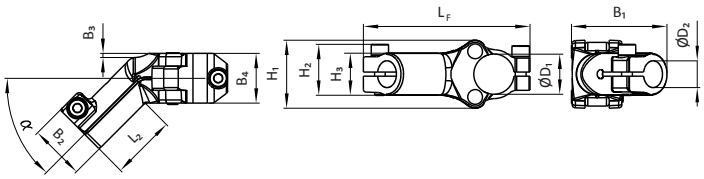

Art.-Nr.	Description	D_1 [mm]	D_2 [mm]	H_1 [mm]	H_2 [mm]	H_3 [mm]	B_1 [mm]	B_2 [mm]	B_3 [mm]	B_4 [mm]	L_F [mm]	L_2 [mm]	α [°]	m [kg]
107287	MKS30/20-TV11-30°-R-OGRE	30	20	53,5	38,5	31	61	41	1	37	128,5	50	30°	0,36
107289	MKS30/20-TV11-45°-R-OGRE	30	20	50,5	38,5	31	70,6	41	3	37	124	46,5	45°	0,35
101567	MKS40/20-TV11-30°-R	40	20	63	35	26	60	34,5	5	37	136	51	30°	0,31
106953	MKS40/20-TV11-30°-R-1	40	20	63	35	26	60	34,5	5	37	136	51	30°	0,31
101569	MKS40/20-TV11-45°-R	40	20	63	35	26	69,5	35	3	37	131	42	45°	0,31
106955	MKS40/20-TV11-45°-R-1	40	20	63	35	26	69,5	35	3	37	131	42	45°	0,31
105689	MKS30/25-TV11-15°-R-OGRE	30	25	53	37,5	31	48,5	41	1,5	37	127	50	15	0,32
104170	MKS30/25-TV11-30°-R-OGRE	30	25	53	37,5	31	60,5	41	1	37	128,5	50	30°	0,33
104172	MKS30/25-TV11-45°-R-OGRE	30	25	53	37,5	31	100,5	41	3	37	124,5	46,5	45°	0,3
106807	MKS40/25-TV11-15°-R-OGRE	40	25	58	38	31	48,5	41	2	37	138,5	50	15	0,36
100922	MKS40/25-TV11-30°-R	40	25	58	38	31	61,5	41	3	37	138	49	30°	0,36
105161	MKS40/25-TV11-30°-R-OGRE	40	25	58	38	31	61,5	41	3	37	138	49	30°	0,36
100924	MKS40/25-TV11-45°-R	40	25	58	38	31	71	41	3	37	134,5	48	45°	0,36
105163	MKS40/25-TV11-45°-R-OGRE	40	25	58	38	31	71	41	3	37	134,5	48	45°	0,36

Description	Part No.
MKS40/25-TV11-XX°-R-2	see table

Type: with hinged clamp splitted, narrow, right, with clamp seat

Material: Hybrid

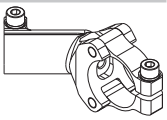

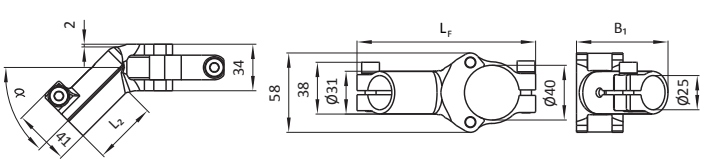

Part No.	Description	B_1 [mm]	L_F [mm]	L_2 [mm]	α [°]	m [kg]
107137	MKS40/25-TV11-15°-R-2	47	136,5	57	15	0,28
107114	MKS40/25-TV11-30°-R-2	58	134,5	48	30	0,27
107116	MKS40/25-TV11-45°-R-2	67	130,5	55	45	0,27

Description	Part No.
MKS40/25-TV11-XX°-L-2	see table

Type: with hinged clamp splitted, narrow, left, with clamp seat

Material: Hybrid

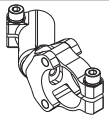

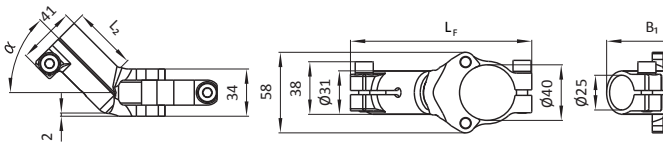

Part No.	Description	B_1 [mm]	L_F [mm]	L_2 [mm]	α [°]	m [kg]
107136	MKS40/25-TV11-15°-L-2	47	136,5	57	15	0,28
107113	MKS40/25-TV11-30°-L-2	58	134,5	48	30	0,27
107115	MKS40/25-TV11-45°-L-2	67	130,5	55	45	0,27

Description	Part No.
MKS40/25-TV11-2	107112

Type: with hinged clamp splitted, narrow, straight, with clamp seat

Material: Hybrid

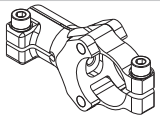

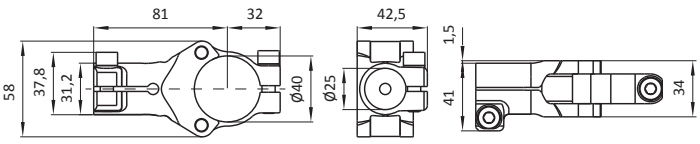

Part No.	Description	m [kg]
107112	MKS40/25-TV11-2	0,25

Description	Part No.
MKS60/XX-TV02-LB	see table

Type: with clamp splitted, straight, with clamp seat

Material: steel

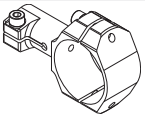

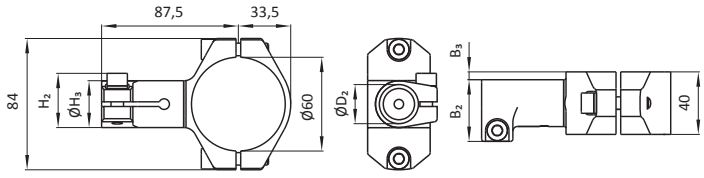

Part No.	Description	D_2 [mm]	H_2 [mm]	H_3 [mm]	B_2 [mm]	B_3 [mm]	m [kg]
17664	MKS60/20-TV02-LB	20	30,2	25	42	7,5	0,55
17871	MKS60/25-TV02-LB	25	34,7	30	44,5	5	0,58

Description	Part No.
MKS60/60-TV02	15756

Type: with clamp splitted, wide, straight, with clamp seat

Material: steel

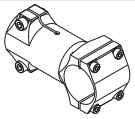

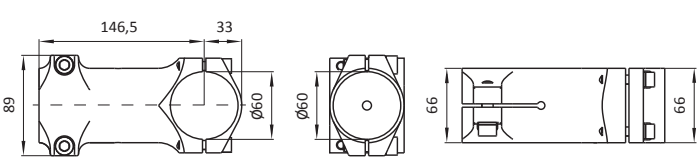

Part No.	Description	m [kg]
15756	MKS60/60-TV02	1,68

T-Connector

Description	Part No.
MKS60/25-TV06-V-CXXX	see table

Type: with clamp splitted 90°, straight, with tube

Material: steel

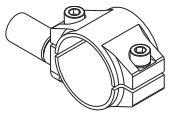

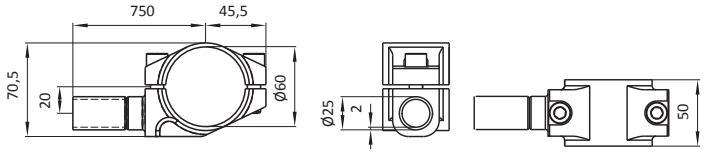

Part No.	Description	L_F [mm]	m [kg]
13781	MKS60/25-TV06-V-C100	100	0,84
13783	MKS60/25-TV06-V-C200	200	0,93
13785	MKS60/25-TV06-V-C300	300	1,02
13787	MKS60/25-TV06-V-C400	400	1,11
13789	MKS60/25-TV06-V-C500	500	1,20
13791	MKS60/25-TV06-V-C600	600	1,29
13793	MKS60/25-TV06-V-C750	750	1,43

Description	Part No.
MKSXX/XX-TV01	see table

Type: with clamp fixed 90°, straight, with clamp seat

Material: steel

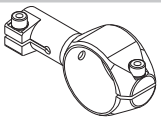

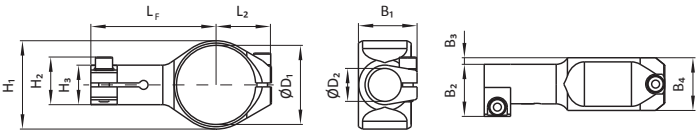

Part No.	Description	D_1 [mm]	D_2 [mm]	H_1 [mm]	H_2 [mm]	H_3 [mm]	B_1 [mm]	B_2 [mm]	B_3 [mm]	B_4 [mm]	L_F [mm]	L_2 [mm]	m [kg]
13703	MKS25/20-TV01	25	20	35,2	30,2	25	38,5	34,5	4	33	72,5	24,5	0,25
15674	MKS25/25-TV01	25	25	35	34	30	41	39,5	1,5	33	75	24,5	0,27
13701	MKS30/20-TV01	30	20	37	29,5	25	41	34,5	6,5	38	72,5	27	0,28
13702	MKS30/25-TV01	30	25	36,4	34	30	44,5	39,5	5	40	78,5	27	0,35
101849	MKS30/30-TV01	30	30	36	48	35	47	44,5	2,5	40	78,5	27	0,62
14597	MKS40/30-TV01	40	30	47	48	36	47	45	2	40	77,5	32	0,73
102467	MKS40/40-TV01	40	40	47	45,5	46	55	55	-	46	77,5	32	0,57
16480	MKS60/25-TV01	40	25	67	36,2	30	44,5	39,5	5	40	95	41,3	0,45

Description	Part No.
MKS60/XX-TV06-V-KAR	see table

Type: with clamp splitted 90°, straight, with clamp seat

Material: steel

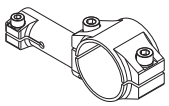

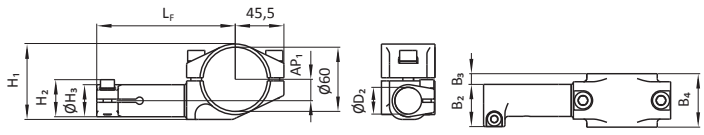

Part No.	Description	D_2 [mm]	H_1 [mm]	H_2 [mm]	H_3 [mm]	B_2 [mm]	B_3 [mm]	B_4 [mm]	L_F [mm]	AP_1 [mm]	m [kg]
104155	MKS60/25-TV06-V-KAR	25	70,5	34,2	30	39,5	10	50	129,5	20,0	0,80
104123	MKS60/40-TV06-V-KAR	40	80	42,7	45	54,5	5	55	149,5	24,0	1,13

Description	Part No.
MKS60/60-TV05-J500	14743

Type: with clamp splitted, wide, straight, with tube

Material: steel

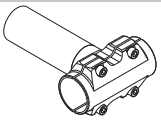

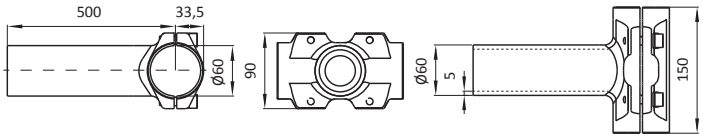

Part No.	Description	m [kg]
14743	MKS60/60-TV05-J500	5,44

Description	Part No.
MKS30-KSL01-XXX	see table

Type: with clamp splitted, straight, with plain bearing, reinforced type

Material: steel

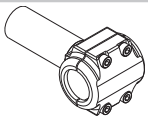

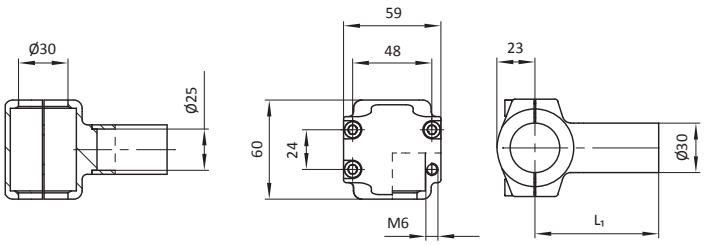

Part No.	Description	L_1 [mm]	m [kg]
14921	MKS30-KSL01-100	100	0,59
14922	MKS30-KSL01-200	200	0,75
14923	MKS30-KSL01-300	300	0,91
14936	MKS30-KSL01-400	400	1,07
14937	MKS30-KSL01-500	500	1,23

T-Connector

Description	Part No.
MKSXX/XX-TV04-XXXX-XXXX	see table

Type: with clmap fixed, straight, with tube double-sided

Material: steel

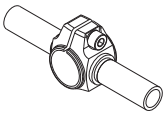

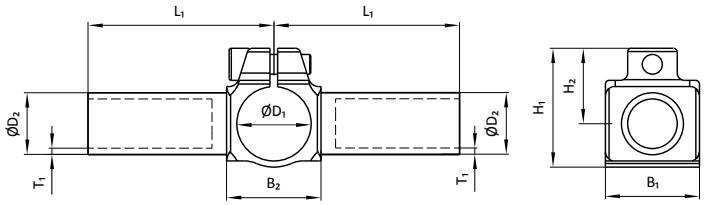

Part No.	Description	D_1 [mm]	D_2 [mm]	H_1 [mm]	H_2 [mm]	B_1 [mm]	B_2 [mm]	L_1 [mm]	T_1 [mm]	m [kg]
10163	MKS20/20-TV04-100-100	20	20	40	26	28	25	100	2,5	0,31
10165	MKS20/20-TV04-200-200	20	20	40	26	28	25	200	2,5	0,52
10167	MKS20/20-TV04-300-300	20	20	40	26	28	25	300	2,5	0,74
10169	MKS20/20-TV04-400-400	20	20	40	26	28	25	400	2,5	0,96
10175	MKS25/20-TV04-100-100	25	20	44	29	33	33	100	2,5	0,36
10181	MKS25/20-TV04-400-400	25	20	44	29	33	33	400	2,5	1,28
10187	MKS25/25-TV04-100-100	25	25	44	29	33	33	100	2,5	0,42
10189	MKS25/25-TV04-200-200	25	25	44	29	33	33	200	2,5	0,67
10191	MKS25/25-TV04-300-300	25	25	44	29	33	33	300	2,5	0,97
10193	MKS25/25-TV04-400-400	25	25	44	29	33	33	400	2,5	1,25
10197	MKS25/25-TV04-600-600	25	25	44	29	33	33	600	2,5	1,81
10201	MKS30/25-TV04-200-200	30	25	48	30,5	38	38	200	2,5	0,74
10203	MKS30/25-TV04-300-300	30	25	48	30,5	38	38	300	2,5	1,02
10205	MKS30/25-TV04-400-400	30	25	48	30,5	38	38	400	2,5	1,30
10207	MKS30/25-TV04-500-500	30	25	48	30,5	38	38	500	2,5	1,47
10211	MKS30/30-TV04-100-100	30	30	49,5	31	38	38	100	2,5	0,54
10213	MKS30/30-TV04-200-200	30	30	49,5	31	38	38	200	2,5	0,88
10215	MKS30/30-TV04-300-300	30	30	49,5	31	38	38	300	2,5	1,22
10217	MKS30/30-TV04-400-400	30	30	49,5	31	38	38	400	2,5	1,56
10221	MKS30/30-TV04-600-600	30	30	49,5	31	38	38	600	2,5	2,24
106126	MKS30/30-TV04-C200-C200	30	30	49,5	31	38	38	200	2	0,76
106130	MKS30/30-TV04-C400-C400	30	30	49,5	31	38	38	400	2	1,31

Description	Part No.
MKSXX/XX-TV07-V-XXXX	see table

Type: with clamp splitted 90°, straight, with tube double-sided

Material: steel

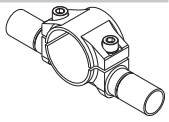

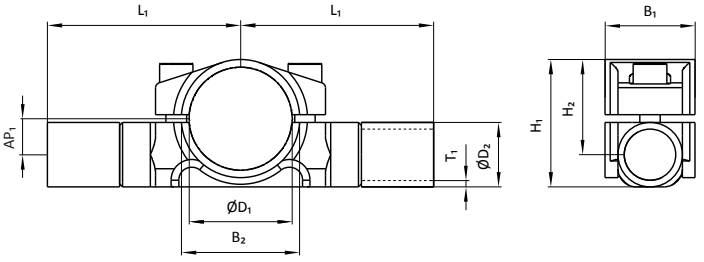

Part No.	Description	D_1 [mm]	D_2 [mm]	B_1 [mm]	L_1 [mm]	T_1 [mm]	AP_1 [mm]	m [kg]
12619	MKS50/30-TV07-C500/C500	50	30	45	500	2	19	1,82
12623	MKS50/30-TV07-C800/C800	50	30	45	800	2	19	2,64
13810	MKS60/25-TV07-V-C1250/C1250	60	25	50	1250	2	20	3,45
13808	MKS60/25-TV07-V-C750/C750	60	25	50	750	2	20	2,31
13760	MKS60/30-TV07-V-C750/C750	60	30	50	750	2	20	2,66
13836	MKS60/30-TV07-V-D1250/D1250	60	30	50	1250	2,5	20	4,79
13834	MKS60/30-TV07-V-D750/D750	60	30	50	750	2,5	20	3,09
15345	MKS60/40-TV07-V-C300/C300	60	40	50	300	2	21,5	1,88
15355	MKS60/40-TV07-V-C1000/C1000	60	40	50	1000	2	21,5	4,51

Description	Part No.
MKS60/XX-TV07-V-KAR	see table

Type: with clamp splitted 90°, straight, with clamp seat double-sided

Material: steel

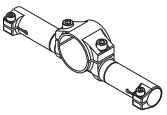

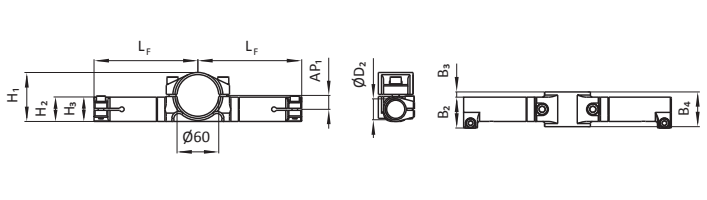

Part No.	Description	D_2 [mm]	H_1 [mm]	H_2 [mm]	H_3 [mm]	B_2 [mm]	B_3 [mm]	B_4 [mm]	L_F [mm]	AP_1 [mm]	m [kg]
101891	MKS60/25-TV07-V-KAR	25	70,5	35	30	39,5	10	50	129,5	20,0	1,08
12590	MKS60/30-TV07-V-KAR	30	70,5	37,2	35	44,5	7,5	50	149,5	20,0	1,11
12873	MKS60/40-TV07-V-KAR	40	80	43,2	45	54,5	5	55	149,5	24,0	1,59

Description	Part No.
MKS30-AV06-S1-EXXX/EXXX	see table

Type: with clamp splitted, for square tube, straight, reinforced type

Material: steel

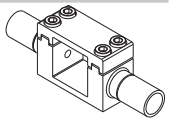

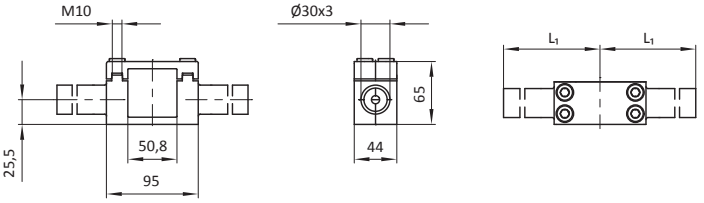

Part No.	Description	L_1 [mm]	m [kg]
106718	MKS30-AV06-S1-E600/E600	600	3,42
106719	MKS30-AV06-S1-E800/E800	800	4,22

Cross Connector

Description	Part No.
MKSXX/XX-KV01-90°-XXXX	see table

Type: tube connection 1: clamp fixed
tube connection 2: clamp fixed, cast part, orientation: +90°

Material: steel

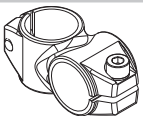

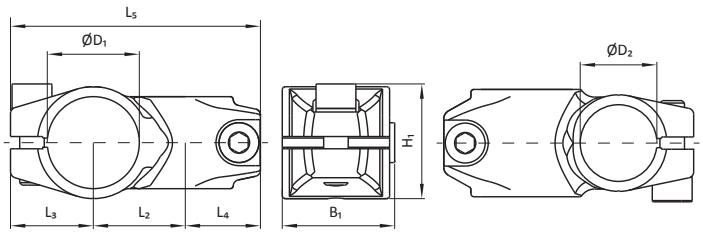

Part No.	Description	D_1 [mm]	D_2 [mm]	H_1 [mm]	B_1 [mm]	L_2 [mm]	L_3 [mm]	L_4 [mm]	L_5 [mm]	m [kg]
10320	MKS20/20-KV01-90°	20	20	31,2	31,2	22,5	22	22	66,5	0,17
10322	MKS25/25-KV01-90°	25	25	35,5	35,5	27,5	24,5	24,5	76,5	0,22
10324	MKS30/25-KV01-90°	30	25	38	37,2	30	27	24,5	81,5	0,25
10325	MKS30/30-KV01-90°	30	30	38	38	32,5	27	27	86,5	0,25
11654	MKS40/20-KV01-90°	40	20	46,5	35,2	32,5	32	22	86,5	0,28
10326	MKS40/30-KV01-90°	40	30	46,5	37,2	37,5	32	27	96,5	0,37
12520	MKS40/40-KV01-90°	40	40	46,5	46,5	42,5	32	32	106,5	0,37

Description	Part No.
MKSXX/XX-KV01-90°-XX	see table

Type: tube connection 1: clamp fixed
tube connection 2: clamp fixed, machined part, orientation: +90°

Material: see table

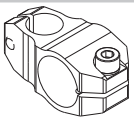

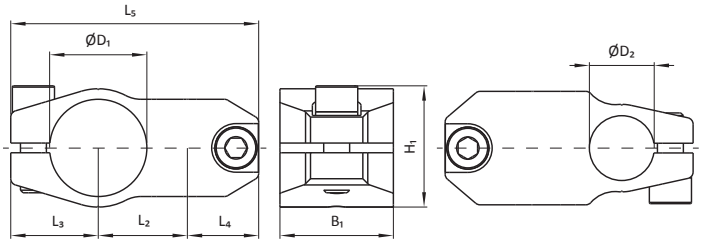

Part No.	Description	D_1 [mm]	D_2 [mm]	H_1 [mm]	B_1 [mm]	L_2 [mm]	L_3 [mm]	L_4 [mm]	L_5 [mm]	m [kg]	Material
102547	MKS20/20-KV01-90°-AL	20	20	38	38	22,5	22	22	66,5	0,10	A
102548	MKS25/20-KV01-90°-AL	25	20	36,5	38,2	25	24,5	22	71,5	0,12	A
10321	MKS25/20-KV01-90°	25	20	35,5	31,2	25	24,5	22	71,5	0,19	D
102549	MKS25/25-KV01-90°-AL	25	25	36,5	36,5	27,5	24,5	24,5	76,5	0,12	A
102550	MKS30/20-KV01-90°-AL	30	20	40,5	40,7	27,5	27	22	76,5	0,13	A
10323	MKS30/20-KV01-90°	30	20	36,8	35	27,5	27	22	76,5	0,26	D
102551	MKS30/25-KV01-90°-AL	30	25	39	38,2	30	27	24,5	81,5	0,13	A
102552	MKS30/30-KV01-90°-AL	30	30	43,5	43,5	32,5	27	27	86,5	0,14	A
103065	MKS40/20-KV01-90°-Al	40	20	52,1	40,7	32,5	32	22	86,5	0,14	A
106522	MKS40/25-KV01-90°-AL	40	25	47	38,2	35	32	24,5	91,5	0,15	A
11655	MKS40/25-KV01-90°	40	25	46,5	37,2	35	32	24,5	91,5	0,31	D
106866	MKS40/30-KV01-90°-AL	40	30	47	43,5	37,5	32	27	96,5	0,16	A
106688	MKS40/40-KV01-90°-AL	40	40	47	47	42,5	32	32	106,5	0,17	A
15280	MKS60/20-KV01-90°	60	20	66,5	40	42,5	42	22	106,5	0,34	D
11658	MKS60/25-KV01-90°	60	25	66,5	40	45	42	24,5	111,5	0,42	D
19122	MKS60/30-KV01-90°	60	30	66,5	40	47,5	42	27	116,5	0,47	D
15807	MKS60/40-KV01-90°	60	40	66,5	46,5	52,5	42	32	126,5	0,49	D

Description	Part No.
MKSXX/XX-KV02-X-90°	see table

Type: tube connection 1: clamp fixed
tube connection 2: clamp splitted, orientation: +90°

Material: steel

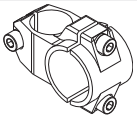

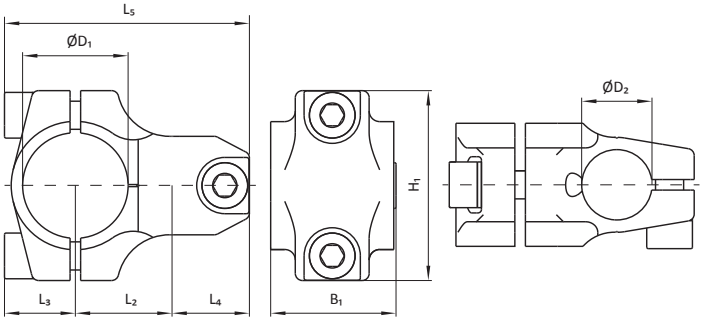

Part No.	Description	D_1 [mm]	D_2 [mm]	H_1 [mm]	B_1 [mm]	L_2 [mm]	L_3 [mm]	L_4 [mm]	L_5 [mm]	m [kg]
15653	MKS40/25-KV02-90°	40	25	64	40	35	23,5	24,5	83	0,35
100455	MKS40/30-KV02-90°	40	30	64	40,7	37,5	23,5	27	88	0,40
101742	MKS60/25-KV02-90°	60	25	84	44	45	33,5	24	102,5	0,54
102582	MKS60/30-KV02-90°	60	30	84	44	47,5	33,5	27	108	0,59
104001	MKS60/40-KV02-1-90°	60	40	91	50	52,5	33	35	120,5	0,85

Description	Part No.
MKS60/40-KV11-1-90°	100866

Type: tube connection 1: clamp splitted
tube connection 2: clamp splitted, orientation: +90°

Material: steel

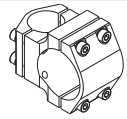

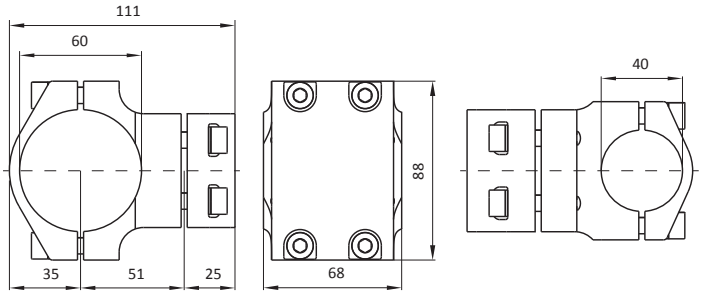

Part No.	Description	m [kg]
100866	MKS60/40-KV11-1-90°	1,51

Material
A → aluminium
D → steel

Technical changes and errors are subject to change without notice!
www.springer.group

Cross Connector

Description	Part No.
MKSXX/XX-KV13-90°-XXXX	see table

Type: tube connection 1: hinged clamp splitted
tube connection 2: clamp fixed, orientation: -90°

Material: Hybrid

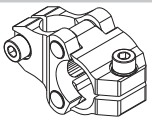

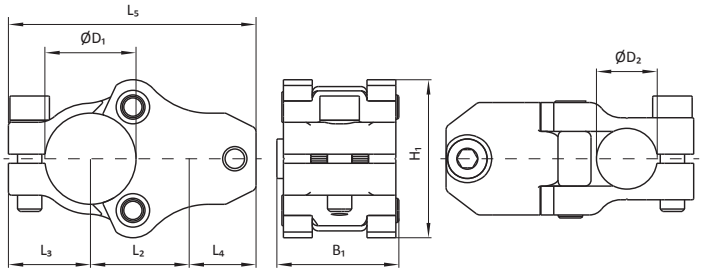

Part No.	Description	D1 [mm]	D2 [mm]	H1 [mm]	B1 [mm]	L2 [mm]	L3 [mm]	L4 [mm]	L5 [mm]	m [kg]
101466	MKS30/20-KV13-90°	30	20	52	40,7	32,5	27	22	81,5	0,26
101908	MKS30/25-KV13-90°	30	25	52	40,7	35	27	24,5	86,5	0,28
101570	MKS40/20-KV13-90°	40	20	62	40,7	35	32	22	89	0,29
106956	MKS40/20-KV13-90°-OGRE	40	20	62	41,2	35	32	22	89	0,29
101377	MKS40/25-KV13-90°	40	25	58	40,7	37	32	24,5	93,5	0,29
101954	MKS40/25-KV13-90°-52	40	25	58	40,7	52	32	24,5	108,5	0,33
101955	MKS40/25-KV13-90°-87	40	25	58	40,7	87	32	24,5	143,5	0,36
107279	MKS40/25-KV13-90°-OGRE	40	25	58	40,7	37	32	24,5	93,5	0,30

Description	Part No.
MKS60/25-KV16-90°-AL	106660

Type: tube connection 1: clamp splitted
tube connection 2: clamp fixed, long

Material: aluminium

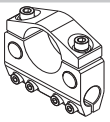

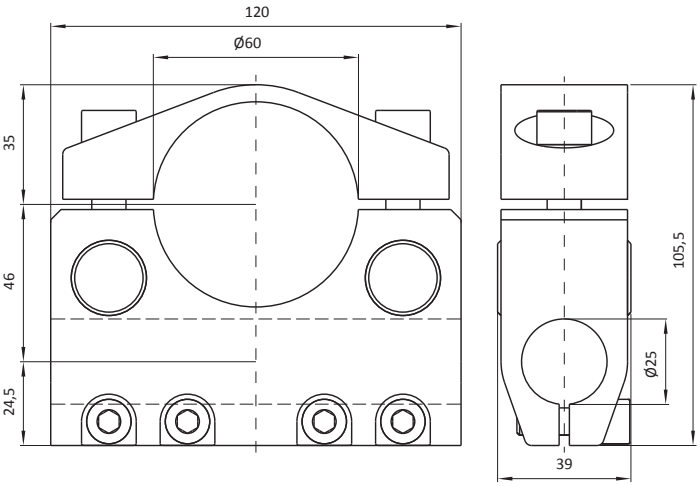

Part No.	Description	m [kg]
106660	MKS60/25-KV16-90°-AL	0,87

Description	Part No.
MKSXX/XX-KVV01-90°	see table

Type: tube connection 1: clamp fixed
tube connection 2: clamp splitted, staggered

Material: steel

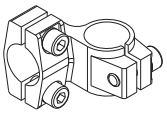

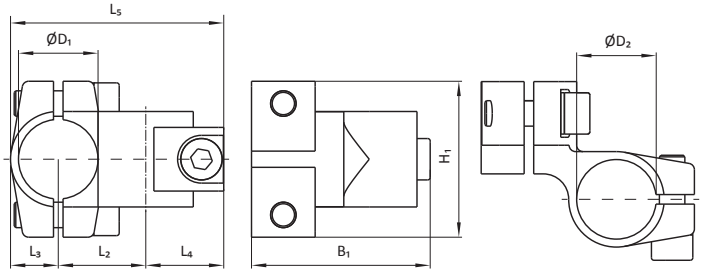

Part No.	Description	D1 [mm]	D2 [mm]	H1 [mm]	B1 [mm]	L2 [mm]	L3 [mm]	L4 [mm]	L5 [mm]	m [kg]
14279	MKS20/20-KVV01-90°	20	20	44	52	22,5	12,5	22	57	0,19
14021	MKS25/20-KVV01-90°	25	20	49	52,7	25	15	22	62	0,23
10327	MKS25/25-KVV01-90°	25	25	49	56,2	27,5	15	24,5	67	0,28

Description	Part No.
MKS40/40-KV01-XXX-AL	see table

Type: tube connection 1: clamp fixed
tube connection 2: clamp fixed, rotated by angle α

Material: aluminium

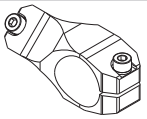

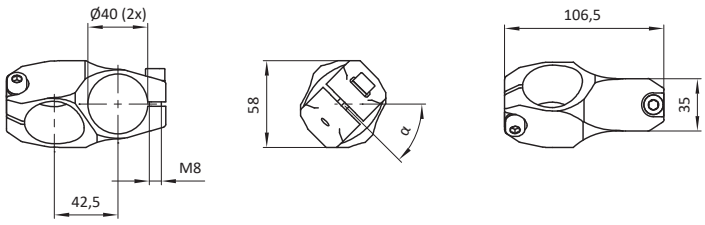

Part No.	Description	α [°]	m [kg]
108104	MKS40/40-KV01-45-Al	45	0,20
108105	MKS40/40-KV01-135-Al	135	0,20

Parallel Connector

Description	Part No.
MKSXX/XX-PV01-XX-AL	see table

Type: tube connection 1: clamp fixed 90°
tube connection 2: clamp fixed 90°

Material: see table

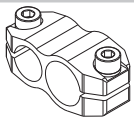

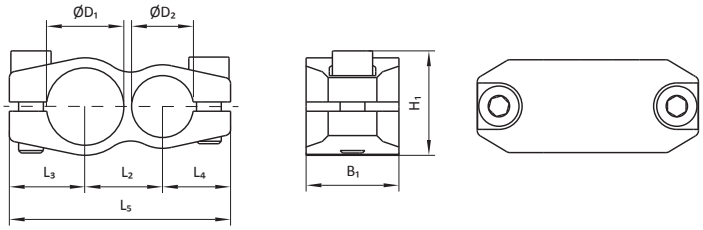

Part No.	Description	D_1 [mm]	D_2 [mm]	H_1 [mm]	B_1 [mm]	L_2 [mm]	L_3 [mm]	L_4 [mm]	L_5 [mm]	m [kg]	Material
10598	MKS20/20-PV01	20	20	29,5	25	22,5	22	22	66,5	0,17	D
11666	MKS25/20-PV01	25	20	33,8	30	25	24,5	22	71,5	0,20	D
11667	MKS25/25-PV01	25	25	33,8	30	27,5	24,5	24,5	76,5	0,24	D
11668	MKS30/20-PV01	30	20	36,3	30	27,5	27	22	76,5	0,23	D
11669	MKS30/25-PV01	30	25	36,3	30	30	27	24,5	81,5	0,24	D
11670	MKS30/30-PV01	30	30	36,5	38	32,5	27	27	86,5	0,32	D
101997	MKS40/40-PV01	40	40	46,5	38	42,5	32	32	106,5	0,44	D
106476	MKS30/20-PV01-50-AL	30	20	41,5	25	50	27	22	99	0,14	A
107614	MKS30/30-PV01-AL	30	30	38	38	32,5	27	27	86,5	0,13	A

Description	Part No.
MKS20/20-PV01-XX-AL	see table

Type: light weight design, tube connection 1: clamp fixed 90°
tube connection 2: clamp fixed 90°

Material: aluminium

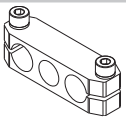

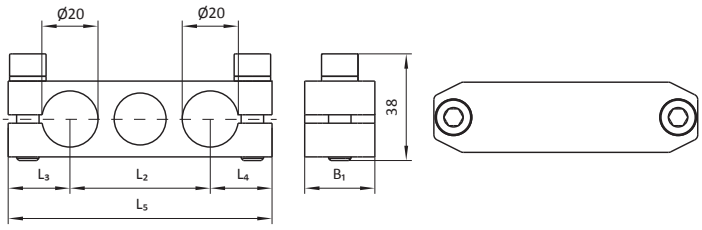

Part No.	Description	B_1 [mm]	L_2 [mm]	L_3 [mm]	L_4 [mm]	L_5 [mm]	m [kg]
106519	MKS20/20-PV01-AL	27	22,5	22	22	66,5	0,11
106516	MKS20/20-PV01-50-AL	25	50	20	20	94	0,13
106819	MKS20/20-PV01-75-AL	25	75	22	22	119	0,16

Description	Part No.
MKS60/30-PV02-AL	106285

Type: tube connection 1: clamp splitted
tube connection 2: clamp fixed 90°

Material: aluminium

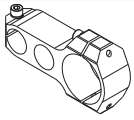

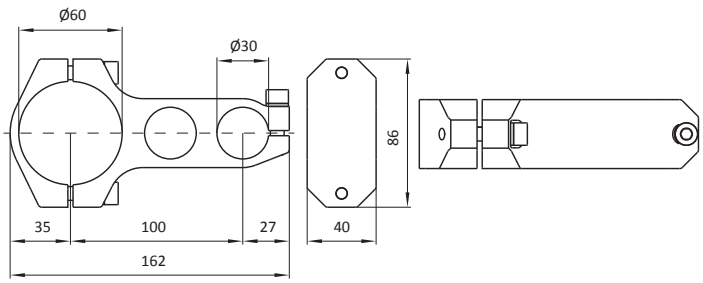

Part No.	Description	m [kg]
106285	MKS60/30-PV02-AL	0,46

Description	Part No.
MKSXX/XX-PV01	see table

Type: tube connection 1: clamp fixed
tube connection 2: clamp fixed 90°

Material: steel

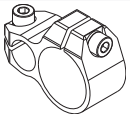

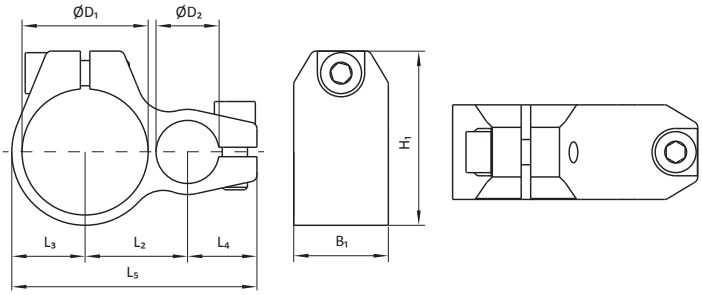

Part No.	Description	D_1 [mm]	D_2 [mm]	H_1 [mm]	B_1 [mm]	L_2 [mm]	L_3 [mm]	L_4 [mm]	L_5 [mm]	m [kg]
13219	MKS40/20-PV01	40	20	55,3	30	32,5	23,3	22	77,8	0,20
10599	MKS40/25-PV01	40	25	55,3	30	35	23,3	24,5	82,8	0,23
17798	MKS40/30-PV01	40	30	55,3	30	45	23,3	27	95,3	0,33
18212	MKS60/25-PV01	60	25	75,3	40	45	33,3	24,5	102,8	0,45

Material
A → aluminium
D → steel

Technical changes and errors are subject to change without notice!
www.springer.group
Document Date: CWCW 12.2025

Ball Connector

Description	Part No.
MKSXX-KUVXX-XX	see table

Type: with hinged clamp, orientation ball mounting: 0° / 20°, with tube, mounting orientation: 90°

Material: steel

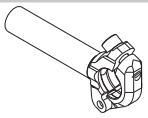

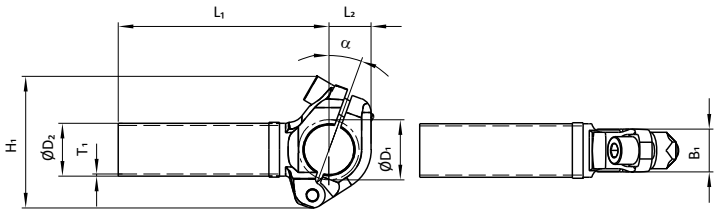

Part No.	Description	D_1 [mm]	D_2 [mm]	H_1 [mm]	B_1 [mm]	L_1 [mm]	L_2 [mm]	α [°]	T_1 [mm]	m [kg]
10340	MKS20-KUV01-075	28,5	20	66	20	75	22	20	1,5	0,23
10341	MKS20-KUV01-100	28,5	20	66	20	100	22	20	1,5	0,25
10343	MKS20-KUV01-150	28,5	20	66	20	150	22	20	1,5	0,28
10345	MKS20-KUV01-200	28,5	20	66	20	200	22	20	1,5	0,32
10347	MKS20-KUV01-250	28,5	20	66	20	250	22	20	1,5	0,35
10349	MKS20-KUV01-300	28,5	20	66	20	300	22	20	1,5	0,38
10350	MKS20-KUV01-400	28,5	20	66	20	400	22	20	1,5	0,45
10351	MKS20-KUV01-500	28,5	20	66	20	500	22	20	1,5	0,51
10352	MKS20-KUV01-600	28,5	20	66	20	600	22	20	1,5	0,62
10366	MKS20-KUV03-100	28,5	20	66	20	100	22	20	2,5	0,28
16176	MKS20-KUV03-150	28,5	20	66	20	150	22	20	2,5	0,33
10367	MKS20-KUV03-200	28,5	20	66	20	200	22	20	2,5	0,39
101968	MKS20-KUV03-250	28,5	20	66	20	250	22	20	2,5	0,44
10368	MKS20-KUV03-300	28,5	20	66	20	300	22	20	2,5	0,49
10369	MKS20-KUV03-400	28,5	20	66	20	400	22	20	2,5	0,61
10370	MKS20-KUV03-500	28,5	20	66	20	500	22	20	2,5	0,71
10371	MKS20-KUV03-600	28,5	20	66	20	600	22	20	2,5	0,82
10396	MKS25-KUV02-100	28,5	25	66	20	100	22	20	1,5	0,27
13863	MKS25-KUV02-150	28,5	25	66	20	150	22	20	1,5	0,32
10397	MKS25-KUV02-200	28,5	25	66	20	200	22	20	1,5	0,36
13866	MKS25-KUV02-250	28,5	25	66	20	250	22	20	1,5	0,41
10398	MKS25-KUV02-300	28,5	25	66	20	300	22	20	1,5	0,45
101561	MKS25-KUV02-350	28,5	25	66	20	350	22	20	1,5	0,49
10399	MKS25-KUV02-400	28,5	25	66	20	400	22	20	1,5	0,54
101562	MKS25-KUV02-450	28,5	25	66	20	450	22	20	1,5	0,58
10400	MKS25-KUV02-500	28,5	25	66	20	500	22	20	1,5	0,63
10401	MKS25-KUV02-600	28,5	25	66	20	600	22	20	1,5	0,71
101383	MKS25-KUV02-800	28,5	25	66	20	800	22	20	1,5	0,88
10378	MKS25-KUV01-100	28,5	25	66	20	100	22	20	2	0,29
12832	MKS25-KUV01-125	28,5	25	66	20	125	22	20	2	0,31
12833	MKS25-KUV01-150	28,5	25	66	20	150	22	20	2	0,34
12834	MKS25-KUV01-175	28,5	25	66	20	175	22	20	2	0,37
10379	MKS25-KUV01-200	28,5	25	66	20	200	22	20	2	0,40
10380	MKS25-KUV01-300	28,5	25	66	20	300	22	20	2	0,51
16066	MKS25-KUV01-350	28,5	25	66	20	350	22	20	2	0,57
10381	MKS25-KUV01-400	28,5	25	66	20	400	22	20	2	0,63
10382	MKS25-KUV01-500	28,5	25	66	20	500	22	20	2	0,75
10383	MKS25-KUV01-600	28,5	25	66	20	600	22	20	2	0,86
15917	MKS25-KUV01-800	28,5	25	66	20	800	22	20	2	1,08
19079	MKS25-KUV03-150	28,5	25	66	20	150	22	20	2,5	0,38
10385	MKS25-KUV03-200	28,5	25	66	20	200	22	20	2,5	0,45

Part No.	Description	D_1 [mm]	D_2 [mm]	H_1 [mm]	B_1 [mm]	L_1 [mm]	L_2 [mm]	α [°]	T_1 [mm]	m [kg]
19080	MKS25-KUV03-250	28,5	25	66	20	250	22	20	2,5	0,52
10386	MKS25-KUV03-300	28,5	25	66	20	300	22	20	2,5	0,59
10387	MKS25-KUV03-400	28,5	25	66	20	400	22	20	2,5	0,73
10388	MKS25-KUV03-500	28,5	25	66	20	500	22	20	2,5	0,87
10389	MKS25-KUV03-600	28,5	25	66	20	600	22	20	2,5	1,01
15904	MKS30-KUV01-300	28,5	30	66	20	300	22	20	1,5	0,51
15905	MKS30-KUV01-400	28,5	30	66	20	400	22	20	1,5	0,62
15907	MKS30-KUV01-600	28,5	30	66	20	600	22	20	1,5	0,84
100434	MKS30-KUV03-300	28,5	30	66	20	300	22	20	2,5	0,68
100436	MKS30-KUV03-400	28,5	30	66	20	400	22	20	2,5	0,85
100438	MKS30-KUV03-500	28,5	30	66	20	500	22	20	2,5	1,02
100440	MKS30-KUV03-600	28,5	30	66	20	600	22	20	2,5	1,19
14960	MKS20-KUV13-300	32	20	66	20	300	22	20	1,5	0,36
14962	MKS20-KUV13-400	32	20	66	20	400	22	20	1,5	0,43
14964	MKS20-KUV13-500	32	20	66	20	500	22	20	1,5	0,50
14966	MKS20-KUV13-600	32	20	66	20	600	22	20	1,5	0,57
105583	MKS20-KUV13-800	32	20	66	20	800	22	20	1,5	0,71
14976	MKS20-KUV07-300	32	20	66	20	300	22	20	2,5	0,47
14979	MKS20-KUV07-600	32	20	66	20	600	22	20	2,5	0,80
12082	MKS25-KUV13-250	32	25	66	20	250	22	20	1,5	0,38
12083	MKS25-KUV13-300	32	25	66	20	300	22	20	1,5	0,43
12085	MKS25-KUV13-400	32	25	66	20	400	22	20	1,5	0,51
12087	MKS25-KUV13-500	32	25	66	20	500	22	20	1,5	0,60
12089	MKS25-KUV13-600	32	25	66	20	600	22	20	1,5	0,69
14989	MKS25-KUV07-300	32	25	66	20	300	22	20	2,5	0,57
14990	MKS25-KUV07-400	32	25	66	20	400	22	20	2,5	0,71
14991	MKS25-KUV07-500	32	25	66	20	500	22	20	2,5	0,85
14992	MKS25-KUV07-600	32	25	66	20	600	22	20	2,5	0,98
13877	MKS30-KUV07-075	32	30	66	20	75	22	20	2,5	0,27
10390	MKS30-KUV07-100	32	30	66	20	100	22	20	2,5	0,32
13878	MKS30-KUV07-125	32	30	66	20	125	22	20	2,5	0,36
13879	MKS30-KUV07-150	32	30	66	20	150	22	20	2,5	0,40
13880	MKS30-KUV07-175	32	30	66	20	175	22	20	2,5	0,44
10391	MKS30-KUV07-200	32	30	66	20	200	22	20	2,5	0,48
13881	MKS30-KUV07-225	32	30	66	20	225	22	20	2,5	0,53
13882	MKS30-KUV07-250	32	30	66	20	250	22	20	2,5	0,57
13883	MKS30-KUV07-275	32	30	66	20	275	22	20	2,5	0,61
10392	MKS30-KUV07-300	32	30	66	20	300	22	20	2,5	0,65
10393	MKS30-KUV07-400	32	30	66	20	400	22	20	2,5	0,82
10394	MKS30-KUV07-500	32	30	66	20	500	22	20	2,5	0,99
10395	MKS30-KUV07-600	32	30	66	20	600	22	20	2,5	1,16
14294	MKS20-KUV05-300	36	20	68	22	300	23	0	2,5	0,51
14298	MKS20-KUV05-500	36	20	68	22	500	23	0	2,5	0,73
10408	MKS30-KUV05-100	36	30	68	22	100	23	0	2,5	0,34
17929	MKS30-KUV05-150	36	30	68	22	150	23	0	2,5	0,42
10409	MKS30-KUV05-200	36	30	68	22	200	23	0	2,5	0,52
100537	MKS30-KUV05-250	36	30	68	22	250	23	0	2,5	0,60
10410	MKS30-KUV05-300	36	30	68	22	300	23	0	2,5	0,69
10411	MKS30-KUV05-400	36	30	68	22	400	23	0	2,5	0,86
10412	MKS30-KUV05-500	36	30	68	22	500	23	0	2,5	1,03
10413	MKS30-KUV05-600	36	30	68	22	600	23	0	2,5	1,21
12218	MKS30-KUV05-750	36	30	68	22	750	23	0	2,5	1,44

Ball Connector

Description	Part No.
MKSXX-KUV1X-1-XXXX	see table

Type: with hinged clamp, orientation ball mounting: 20°, with tube, mounting orientation: parallel

Material: steel

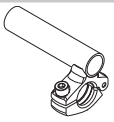

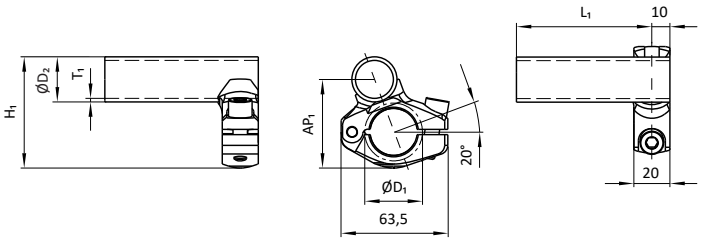

Part No.	Description	D_1 [mm]	D_2 [mm]	H_1 [mm]	L_1 [mm]	T_1 [mm]	AP_1 [mm]	m [kg]
16536	MKS25-KUV14-1-C300	28,5	25	62	300	2	51	0,53
19876	MKS25-KUV12-1-C600	32	25	61,5	600	2	51	0,85
103812	MKS25-KUV14-1-C700	28,5	25	62	700	2	51	0,98
100297	MKS30-KUV14-1-C600	28,5	30	66,5	600	2	5 3,5	1,02

Description	Part No.
MKS25-KUV01-AXXX	see table

Type: hinged clamp: orientation ball mounting: 20°, with tube, mounting orientation: 90°

Material: steel

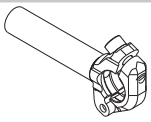

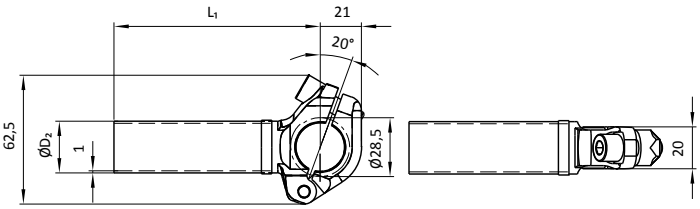

Part No.	Description	D_2 [mm]	L_1 [mm]	m [kg]
107696	MKS25-KUV01-A100	25	100	0,24
107697	MKS25-KUV01-A200	25	200	0,30
107698	MKS25-KUV01-A300	25	300	0,36
107699	MKS25-KUV01-A400	25	400	0,42
107700	MKS25-KUV01-A500	25	500	0,48
107701	MKS25-KUV01-A600	25	600	0,54

Description	Part No.
MKSXX-KUVXX-KAR-XX	see table

Type: hinged clamp, orientation ball mounting: 0° / 20°, with clamp seat, mounting orientation: 90°

Material: see table

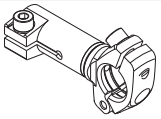

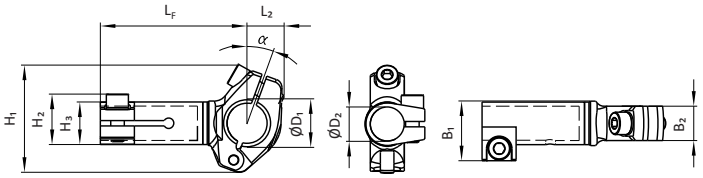

Part No.	Description	D_1 [mm]	D_2 [mm]	H_1 [mm]	H_2 [mm]	H_3 [mm]	B_1 [mm]	B_2 [mm]	L_1 [mm]	L_2 [mm]	α [°]	m [kg]	Material
14302	MKS20-KUV11-KAR	28,5	20	66	35	25	37	20	86	22	20	0,33	D
14637	MKS25-KUV11-KAR	28,5	25	66	36	30	40,5	20	96	22	20	0,38	D
16509	MKS30-KUV11-KAR	28,5	30	66	37	35	44,5	20	94	22	20	0,39	D
10404	MKS20-KUV10-KAR	32	20	66	35	25	37	20	86	22	20	0,30	D
12488	MKS30-KUV08-KAR	32	30	66	37	35	44,5	20	94	22	20	0,39	D
12701	MKS20-KUV04-KAR	36	20	68,5	35	25	37,5	22	73	22	0	0,32	D
13610	MKS25-KUV04-KAR	36	25	68,5	36	30	41	22	82	22	0	0,37	D
10407	MKS30-KUV04-KAR	36	30	68,5	38	35	45,5	22	90	23	0	0,40	D
101554	MKS30-KUV04-KAR-AL	36	30	75	43	36	46	25	90	23	20	0,21	A

Description	Part No.
MKS40-KUV18-28,5	108182

Type: with clamp fixed, with ball mounting

Material: aluminium

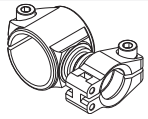

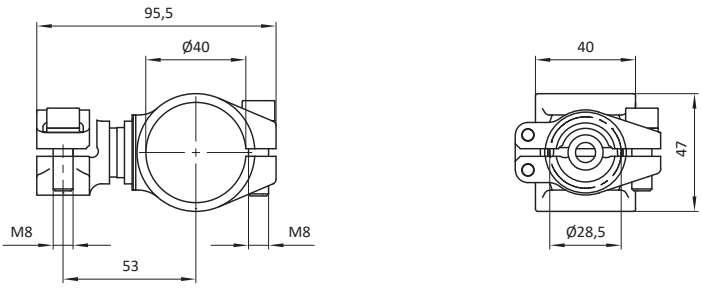

Part No.	Description	m [kg]
108182	MKS40-KUV18-28,5	0,42

Material
A → aluminium
D → steel

Technical changes and errors are subject to change without notice!
www.springer.group
Document Date: CWCW 12.2025

Rod Journal Clamp

Description	Part No.
MKSXX-WK10-XXXX-AL	see table

Type: with tube, screw orientation: 20°

Material: steel

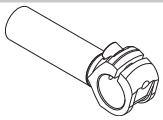

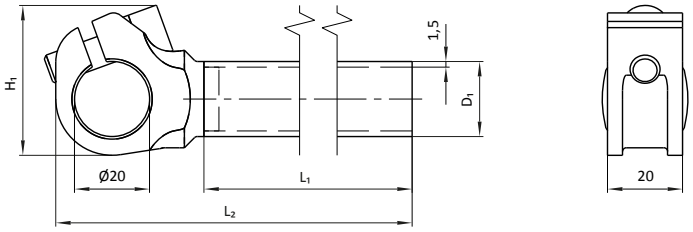

Part No.	Description	D_1 [mm]	H_1 [mm]	L_1 [mm]	L_2 [mm]	m [kg]
12722	MKS20-WK10-B200	20	39,9	175,5	215	0,24
12724	MKS20-WK10-B300	20	39,9	275,5	315	0,30
12726	MKS20-WK10-B400	20	39,9	375,5	415	0,37
12730	MKS20-WK10-B600	20	39,9	575,5	615	0,48
12901	MKS25-WK10-B250	25	39,6	225,5	265	0,32
12902	MKS25-WK10-B300	25	39,6	275,5	315	0,36
12904	MKS25-WK10-B400	25	39,6	375,5	415	0,45
12908	MKS25-WK10-B600	25	39,6	575,5	615	0,62
106772	MKS25-WK10-B800	25	39,6	775,5	815	0,79

Description	Part No.
MKSXX-WK11-XXXX	see table

Type: with tube, screw orientation: 20°

Material: steel

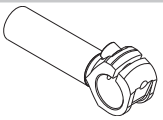

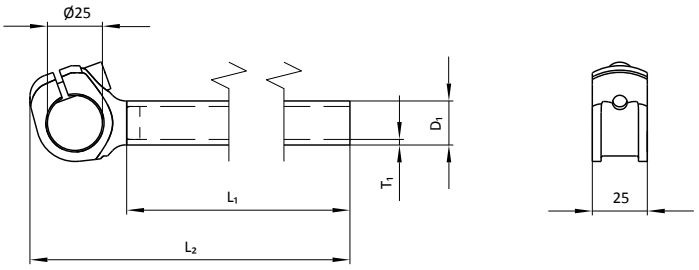

Part No.	Description	D_1 [mm]	L_1 [mm]	L_2 [mm]	T_1 [mm]	m [kg]
17086	MKS20-WK11-D300	20	276,5	320,4	2,5	0,46
17088	MKS20-WK11-D400	20	376,5	420,4	2,5	0,57
17092	MKS20-WK11-D600	20	576,5	620,4	2,5	0,78
15951	MKS25-WK11-D300	25	276,5	320,4	2,5	0,56
15953	MKS25-WK11-D400	25	376,5	420,4	2,5	0,70
15957	MKS25-WK11-D600	25	573,5	620,4	2,5	0,98
100029	MKS30-WK11-B300	30	276,5	320,4	1,5	0,46
100031	MKS30-WK11-B400	30	376,5	420,4	1,5	0,57
100035	MKS30-WK11-B600	30	576,5	620,4	1,5	0,78

Description	Part No.
MKS25-WKXX-XXX	see table

Type: with rod, screw orientation: 180°

Material: aluminium

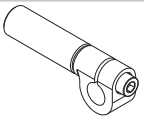

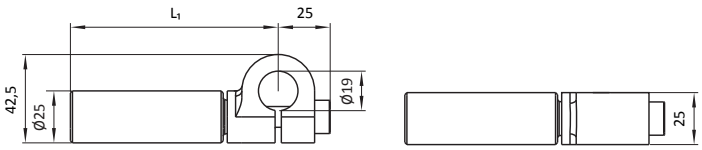

Part No.	Description	H_1 [mm]	L_1 [mm]	m [kg]
102072	MKS25-WK13-100	42,5	100	0,20
102074	MKS25-WK13-200	42,5	200	0,34
102076	MKS25-WK13-300	42,5	300	0,47
102078	MKS25-WK13-400	42,5	400	0,61
103281	MKS25-WK13-500	42,5	500	0,73
102080	MKS25-WK13-600	42,5	600	0,87
106848	MKS25-WK15-100	40	115	0,12
106850	MKS25-WK15-200	40	215	0,26
106852	MKS25-WK15-300	40	315	0,40
106854	MKS25-WK15-400	40	415	0,54
106856	MKS25-WK15-500	40	515	0,68
106857	MKS25-WK15-600	40	615	0,75

Description	Part No.
MKS25-WK12-1-BXXX	see table

Type: with tube, screw orientation: 90°

Material: steel

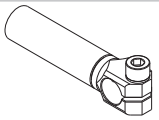

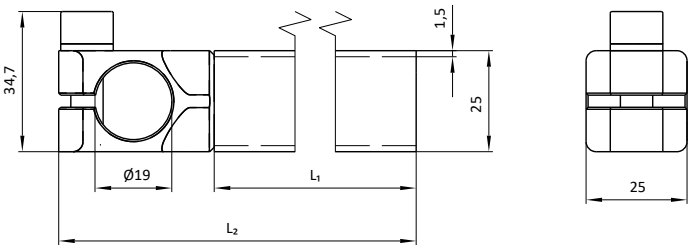

Part No.	Description	L_1 [mm]	L_2 [mm]	m [kg]
102131	MKS25-WK12-1-B200	180	218,5	0,26
102133	MKS25-WK12-1-B300	280	318,5	0,35
102135	MKS25-WK12-1-B400	380	418,5	0,43
102137	MKS25-WK12-1-B500	480	518,5	0,52
102139	MKS25-WK12-1-B600	580	618,5	0,61

Hinge Connector

Description	Part No.
MKS25-SCA02-285-XXX	see table

Type: tube connection: hinged clamp Ø25 mm, swivelling (6x30°)
ball mounting: hinged clamp Ø28,5 mm, swivelling (6x30°)

Material: aluminium

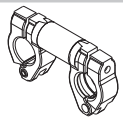

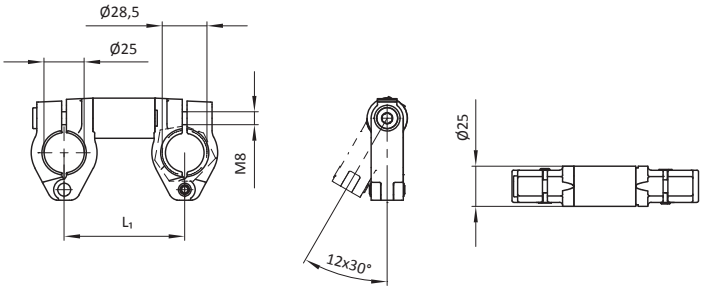

Part No.	Description	L_1 [mm]	m [kg]
106500	MKS25-SCA02-285-75	75	0,23
106501	MKS25-SCA02-285-100	100	0,26
106502	MKS25-SCA02-285-125	125	0,29
106503	MKS25-SCA02-285-150	150	0,32

Description	Part No.
MKS25-SCA01-285-XXX	see table

Type: tube connection: clamp fixed Ø25 mm, swivelling (6x30°)
ball mounting: hinged clamp Ø28,5 mm, swivelling (6x30°)

Material: aluminium

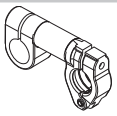

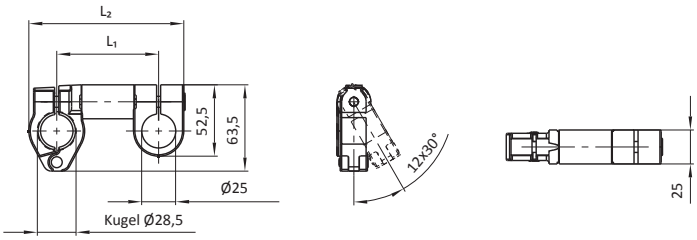

Part No.	Description	L_1 [mm]	L_2 [mm]	m [kg]
106216	MKS25-SCA01-285-075	75	114	0,22
105718	MKS25-SCA01-285-100	100	139	0,25
105719	MKS25-SCA01-285-125	125	164	0,28
106217	MKS25-SCA01-285-150	150	189	0,31

Description	Part No.
MKS25/20-SCA03-075	107725

Type: tube connection 1: clamp fixed swivelling (6x30°)
tube connection 2: clamp fixed swivelling (6x30°)

Material: aluminium

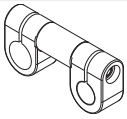

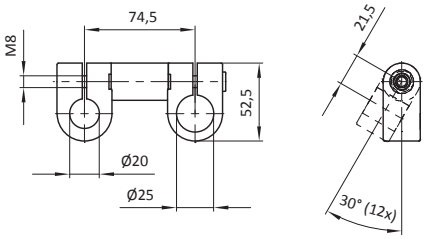

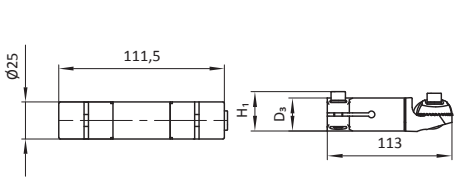

Part No.	Description	m [kg]
107725	MKS25/20-SCA03-075	0,24

Description	Part No.
MKSXX/XX-GV01-DXXX-KAR	see table

Type: with tube und clamp seat, degree of freedom 190°

Material: steel

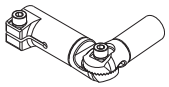

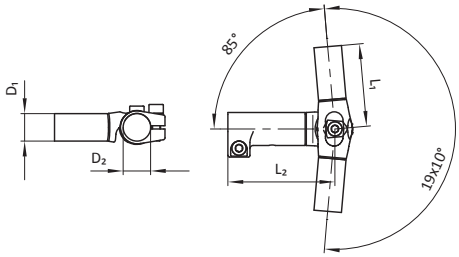

Part No.	Description	D_1 [mm]	D_2 [mm]	D_3 [mm]	H_1 [mm]	L_1 [mm]	L_2 [mm]	m [kg]
104299	MKS25/25-GV01-D100-KAR	25	25	30	35,7	100	97	0,39
104300	MKS25/25-GV01-D125-KAR	25	25	30	35,7	125	97	0,42
104301	MKS25/25-GV01-D150-KAR	25	25	30	35,7	150	97	0,46
104302	MKS25/25-GV01-D200-KAR	25	25	30	35,7	200	97	0,53
104298	MKS25/25-GV01-D75-KAR	25	25	30	35,7	75	97	0,35
106532	MKS30/30-GV01-D100-KAR	30	30	35	37,2	100	98	0,52
106535	MKS30/30-GV01-D125-KAR	30	30	35	37,2	125	98	0,56
106536	MKS30/30-GV01-D150-KAR	30	30	35	37,2	150	98	0,60
106537	MKS30/30-GV01-D200-KAR	30	30	35	37,2	200	98	0,69
106534	MKS30/30-GV01-D75-KAR	30	30	35	37,2	75	98	0,52

Hinge Connector

Description	Part No.
MKS40/25-GV01-KAR-KAL	107612

Type: with clamp seat double-sided,degree of freedom 170°

Material: steel

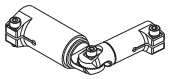

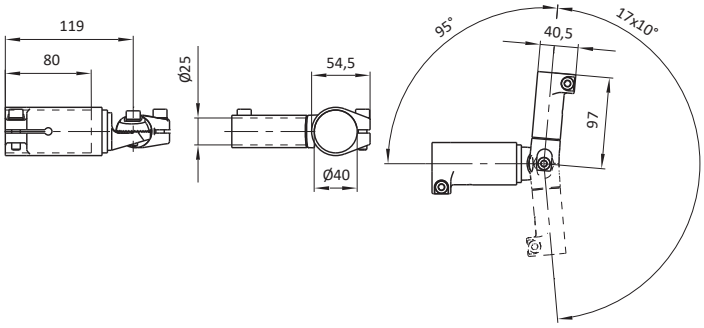

Part No.	Description	m [kg]
107612	MKS40/25-GV01-KAR-KAL	0,70

Description	Part No.
MKSXX/XX-GV01-KAR-KAL	see table

Type: with clamp seat double-sided, degree of freedom 190°

Material: steel



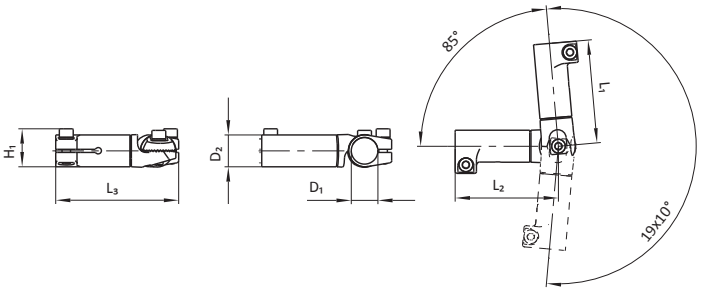

Part No.	Description	D_1 [mm]	D_2 [mm]	H_1 [mm]	L_1 [mm]	L_2 [mm]	L_3 [mm]	m [kg]
105563	MKS25/25-GV01-KAR-KAL	25	30	35,7	97	97	115,6	0,53
106557	MKS30/30-GV01-KAR-KAL	30	35	35,7	98	98	118	0,59

Description	Part No.
MKS25-GV01-DXXX	see table

Type: with tube

Material: steel

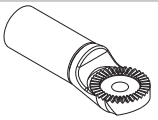

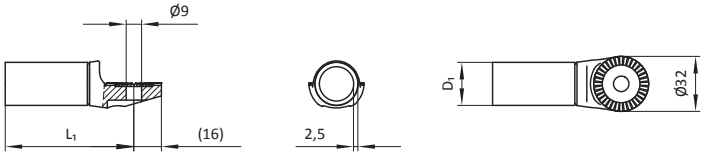

Part No.	Description	D_1 [mm]	L_1 [mm]	m [kg]
104304	MKS25-GV01-D75	25	75	0,08
104305	MKS25-GV01-D100	25	100	0,11
104306	MKS25-GV01-D125	25	125	0,15
104307	MKS25-GV01-D150	25	150	0,18
104308	MKS25-GV01-D200	25	200	0,25
106539	MKS30-GV01-D75	30	75	0,17
106540	MKS30-GV01-D100	30	100	0,22
106541	MKS30-GV01-D125	30	125	0,26
106542	MKS30-GV01-D150	30	150	0,30
106543	MKS30-GV01-D200	30	200	0,39

Description	Part No.
MKSXX-GV01-KAL	see table

Type: with clamp seat, left

Material: steel

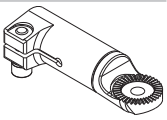

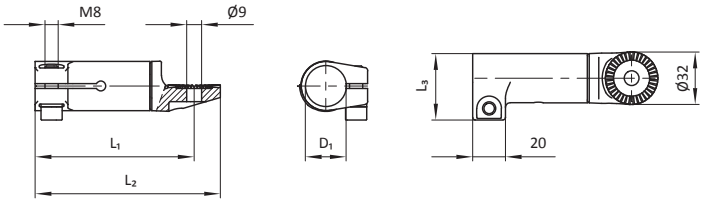

Part No.	Description	D_1 [mm]	L_1 [mm]	L_2 [mm]	L_3 [mm]	m [kg]
105562	MKS25-GV01-KAL	25	97	113	40,5	0,26
106556	MKS30-GV01-KAL	30	98	114	44,5	0,30

Hinge Connector

Description	Part No.
MKSXX-GV01-KAR	see table

Type: with clamp seat, right

Material: steel

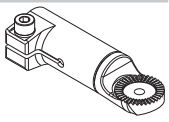

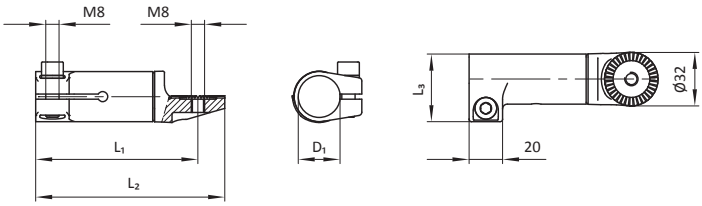

Part No.	Description	D_1 [mm]	L_1 [mm]	L_2 [mm]	L_3 [mm]	m [kg]
104303	MKS25-GV01-KAR	25	97	113	40,5	0,26
106538	MKS30-GV01-KAR	30	98	114	44,5	0,30
107619	MKS40-GV01-KAR	40	119	135	54,5	0,43

Clamp Seat

Description	Part No.
MKSXX/XX-KAR07-XX°	see table

Type: with tube angled, right

Material: steel

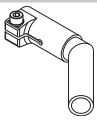

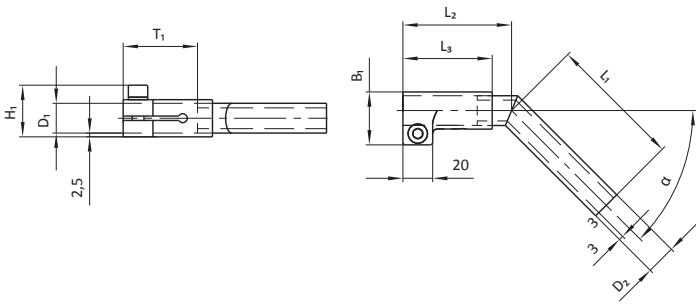

Part No.	Description	D_1 [mm]	D_2 [mm]	H_1 [mm]	B_1 [mm]	L_1 [mm]	L_2 [mm]	L_3 [mm]	α [°]	T_1 [mm]	m [kg]
102035	MKS20/20-KAR07-30°	20	20	34,7	35,5	90	70	60	30	50	0,28
102036	MKS20/20-KAR07-45°	20	20	34,7	35,5	90	70	60	45	50	0,28
107899	MKS20/20-KAR07-90°	20	20	34,7	35,5	140	81,6	60	90	50	0,33
101693	MKS25/25-KAR07-30°	25	25	35,7	40,5	90	83	70	30	60	0,34
101694	MKS25/25-KAR07-45°	25	25	35,7	40,5	90	83	70	45	60	0,36
102731	MKS25/25-KAR07-90°	25	25	35,7	40,5	140	92	70	90	60	0,44
106977	MKS25/25-KAR07-90°-190	25	25	35,7	40,5	190	92	70	90	60	0,52

Description	Part No.
MKSXX/XX-KAL07-XX°	see table

Type: with tube angled, left

Material: steel

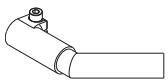

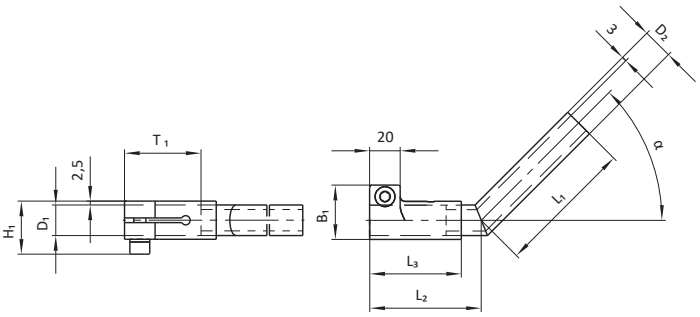

Part No.	Description	D_1 [mm]	D_2 [mm]	H_1 [mm]	B_1 [mm]	L_1 [mm]	L_2 [mm]	L_3 [mm]	α [°]	T_1 [mm]	m [kg]
102988	MKS20/20-KAL07-30°	20	20	34,7	35,5	90	70	60	30	50	0,28
102989	MKS20/20-KAL07-45°	20	20	34,7	35,5	90	70	60	45	50	0,28
102756	MKS25/25-KAL07-30°	25	25	35,7	40,5	90	83	70	30	60	0,35
102757	MKS25/25-KAL07-45°	25	25	35,7	40,5	90	83	70	45	60	0,35

Description	Part No.
MKSXX-KAL01-XX	see table

Type: weldable, left

Material: steel

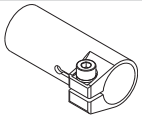

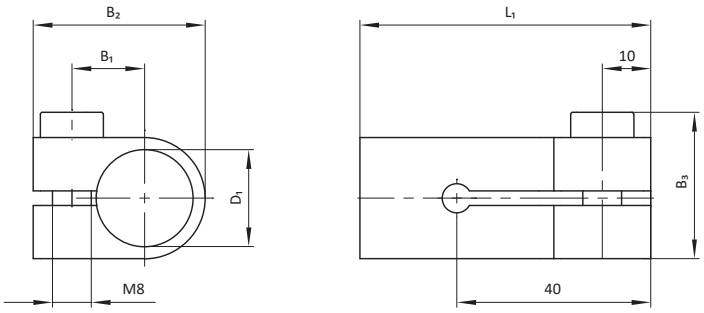

Part No.	Description	D_1 [mm]	B_1 [mm]	B_2 [mm]	B_3 [mm]	L_1 [mm]	m [kg]
11626	MKS20-KAL01-60	20	15	35,5	30,2	60	0,12
11628	MKS25-KAL01-70	25	18,5	40,5	35,7	70	0,16
11630	MKS30-KAL01-90	30	21	45,5	38,2	90	0,72

Description	Part No.
MKSXX-KAR01-XX	see table

Type: weldable, right

Material: steel

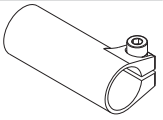

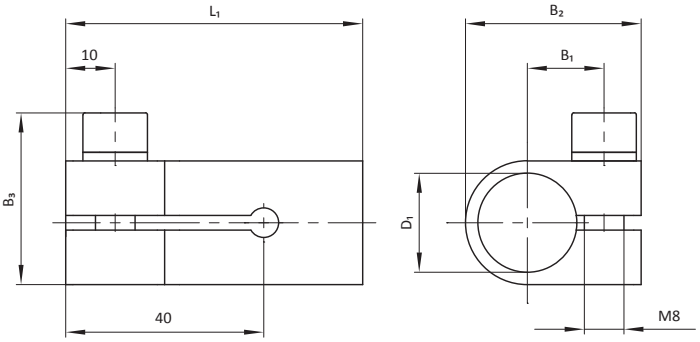

Part No.	Description	D_1 [mm]	B_1 [mm]	B_2 [mm]	B_3 [mm]	L_1 [mm]	m [kg]
11627	MKS20-KAR01-60	20	15,5	35,5	34,7	60	0,12
11629	MKS25-KAR01-70	25	18,5	40,5	35,7	70	0,16
11631	MKS30-KAR01-90	30	21	45,5	38,2	90	0,22

Clamp Seat

Description	Part No.
MKS30-KAR09-100-AL	106159

Type: clamp seat double-sided

Material: aluminium

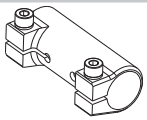

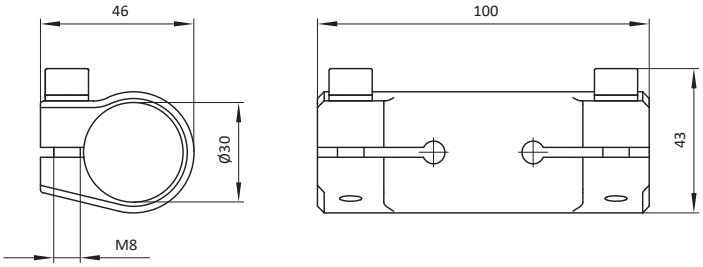

Part No.	Description	m [kg]
106159	MKS30-KAR09-100-AL	0,15

Description	Part No.
MKSXX-RAX1-X00	see table

Type: with plate

Material: steel

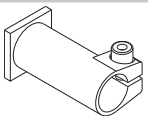

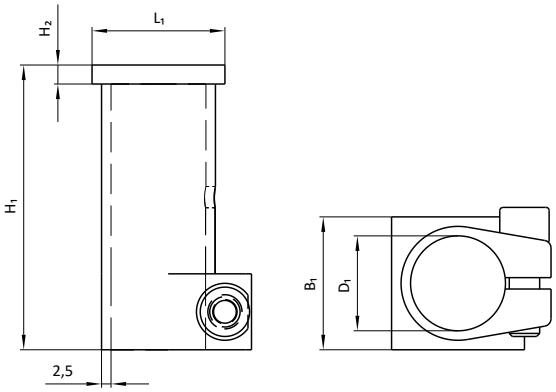

Part No.	Description	D_1 [mm]	H_1 [mm]	H_2 [mm]	B_1 [mm]	L_1 [mm]	m [kg]
10426	MKS20-RA02	20	65	5	35	35	0,19
10427	MKS25-RA02	25	75	5	40	40	0,25
10493	MKS30-RA02	30	95	5	45	45	0,31
10507	MKS20-RA12	20	80	20	35	35	0,33
10508	MKS25-RA12	25	90	20	40	40	0,42
10509	MKS30-RA12	30	110	20	45	45	0,55

Adapter with Ball/Rod Journal

Description	Part No.
MKSXX-AKU10	see table

Type: with ball, with clamp fixed

Material: steel

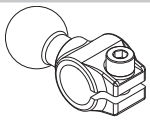

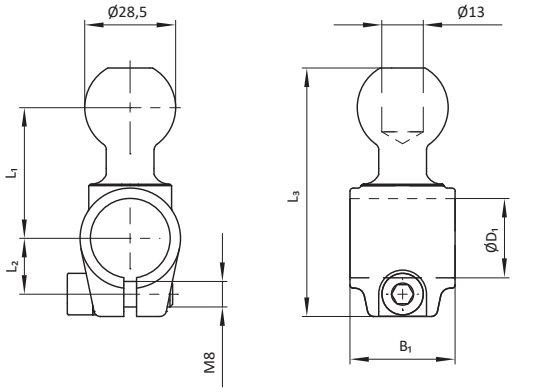

Part No.	Description	D_1 [mm]	H_1 [mm]	B_1 [mm]	L_1 [mm]	L_2 [mm]	L_3 [mm]	m [kg]
10510	MKS20-AKU10	20	32	28	39	15	73,4	0,18
10511	MKS25-AKU10	25	35,5	33	41	17,5	77,9	0,22

Description	Part No.
MKS25-GB132-2-XX	see table

Type: with ball, with clamp fixed

Material: see table

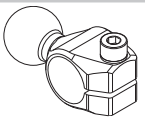

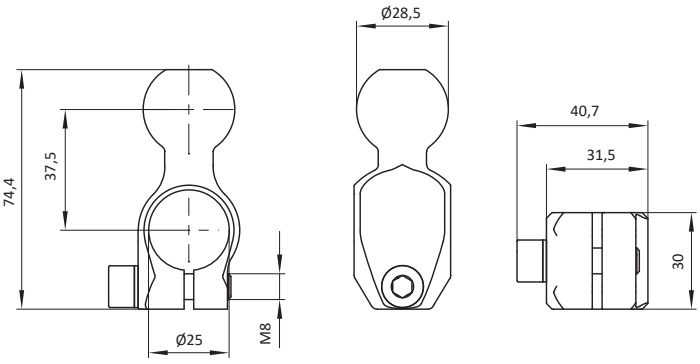

Part No.	Description	m [kg]	Material
103209	MKS25-GB132-2	0,24	D
103212	MKS25-GB132-2-AL	0,10	A

Material
A → aluminium
D → steel

Adapter with Ball/Rod Journal

Description	Part No.
MKS-AKUXX-X-XX	see table

Type: with ball, with mounting, with thread or hole

Material: see table

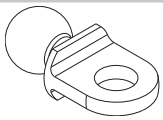

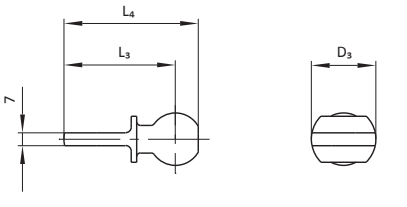

Part No.	Description	D_1 [mm]	D_2 [mm]	D_3 [mm]	L_1 [mm]	L_2 [mm]	L_3 [mm]	L_4 [mm]	m [kg]	Material
12688	MKS-AKU22-1	28,5	20,5	36	22	46	64	76,4	0,16	D
12879	MKS-AKU23	28,5	M18x1,5	35	19	43	60,5	73	0,15	D
13902	MKS-AKU28	32	M20x1,5	36	22	48	66	79,5	0,21	D
13903	MKS-AKU28-1	32	20,5	36	22	48	66	79,5	0,20	D
15207	MKS-AKU39	32	30,5	48	24	50	74	87,5	0,23	D
15575	MKS-AKU22	28,5	M20x1,5	36	22	46	64	76,4	0,16	D
15838	MKS-AKU39-2	28,5	30,5	48	24	48	72	84,4	0,19	D
19893	MKS-AKU22-2	36	M20x1,5	36	22	51	69	84	0,26	D
100769	MKS-AKU39-3	28,5	M30x1,5	48	24	48	72	84,4	0,19	D
100770	MKS-AKU39-4	32	M30x1,5	48	24	50	74	87,5	0,24	D
102577	MKS-AKU22-3	36	20,5	36	22	51	69	84	0,26	D
104103	MKS-AKU39-5	36	30,5	48	24	53	77	92	0,29	D
104104	MKS-AKU39-6	36	M30x1,5	48	24	53	77	92	0,30	D
104105	MKS-AKU95	28,5	18,5	36	22	46	64	76,4	0,16	D
104106	MKS-AKU95-1	28,5	M18x1	36	22	46	64	76,4	0,17	D
104107	MKS-AKU95-2	32	18,5	36	22	48	66	79,5	0,21	D
104108	MKS-AKU95-3	32	M18x1	36	22	48	66	79,5	0,21	D
104109	MKS-AKU95-4	36	18,5	36	22	51	69	84	0,26	D
104110	MKS-AKU95-5	36	M18x1	36	22	51	69	84	0,27	D
105381	MKS-AKU28-2	32	22	36	22	48	66	79,5	0,20	D
105756	MKS-AKU95-AL	28,5	18,5	36	22	46	64	76,4	0,06	A
105757	MKS-AKU95-1-AL	28,5	M18x1	36	22	46	64	76,4	0,06	A
105758	MKS-AKU95-2-AL	32	18,5	36	22	48	66	79,5	0,07	A
105759	MKS-AKU95-3-AL	32	M18x1	36	22	48	66	79,5	0,07	A
105760	MKS-AKU95-4-AL	36	18,5	36	22	51	69	84	0,09	A
105761	MKS-AKU95-5-AL	36	M18x1	36	22	51	69	84	0,09	A
105762	MKS-AKU22-1-AL	28,5	20,5	36	22	46	64	76,4	0,06	A
105763	MKS-AKU22-AL	28,5	M20x1,5	36	22	46	64	76,4	0,06	A
105764	MKS-AKU22-2-AL	36	M20x1,5	36	22	51	69	84	0,09	A
105765	MKS-AKU22-3-AL	36	20,5	36	22	51	69	84	0,09	A
105766	MKS-AKU39-AL	32	30,5	48	24	50	74	87,5	0,08	A
105767	MKS-AKU39-2-AL	28,5	30,5	48	24	48	72	84,4	0,07	A
105768	MKS-AKU39-3-AL	28,5	M30x1,5	48	24	48	72	84,4	0,07	A
105769	MKS-AKU39-4-AL	32	M30x1,5	48	24	50	74	87,5	0,08	A
105770	MKS-AKU39-5-AL	36	30,5	48	24	53	77	92	0,10	A
105771	MKS-AKU39-6-AL	36	M30x1,5	48	24	53	77	92	0,10	A
105772	MKS-AKU28-AL	32	M20x1,5	36	22	48	66	79,5	0,07	A
105773	MKS-AKU28-1-AL	32	20,5	36	22	48	66	79,5	0,07	A
105774	MKS-AKU28-2-AL	32	22	36	22	48	66	79,5	0,07	A

Description	Part No.
MKS-AKU36-X	see table

Type: with ball, with flange 90°

Material: aluminium

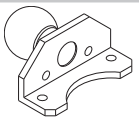

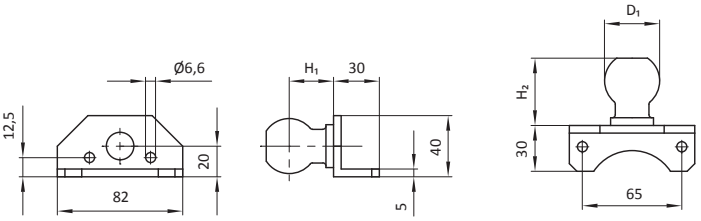

Part No.	Description	D_1 [mm]	H_1 [mm]	H_2 [mm]	m [kg]
15050	MKS-AKU36	36	29	44	0,37
15709	MKS-AKU36-1	28,5	26	38,4	0,27

Material
A → aluminium
D → steel

Technical changes and errors are subject to change without notice!
www.springer.group
Document Date: CWCW 12.2025

Adapter with Ball/Rod Journal

Description	Part No.
MKS-AKU47	15433

Type: with ball, with flange

Material: steel

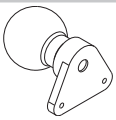

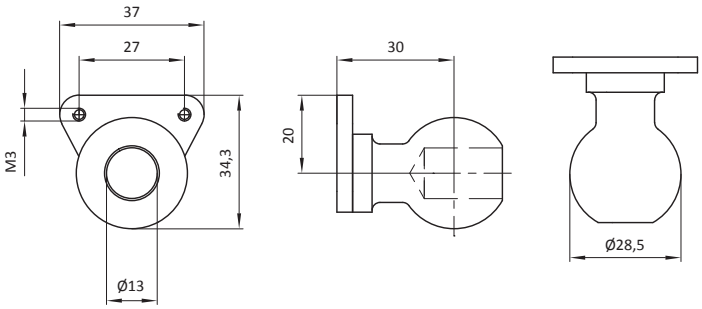

Part No.	Description	m [kg]
15433	MKS-AKU47	0,12

Description	Part No.
MKS-AKU31	14625

Type: with ball, with weld-on angle

Material: steel

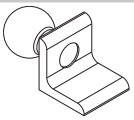

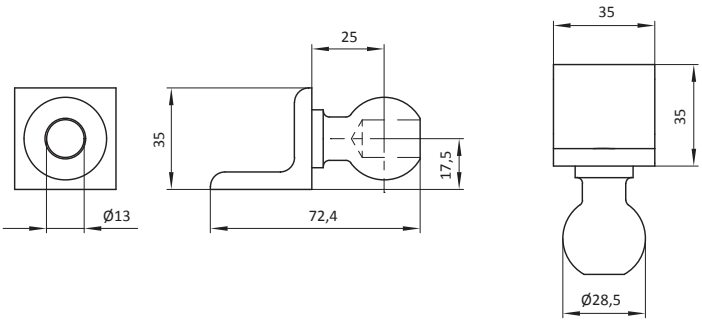

Part No.	Description	m [kg]
14625	MKS-AKU31	0,12

Description	Part No.
MKS-AWXX	see table

Type: with rod journal, with flange

Material: steel

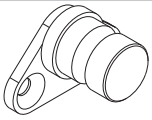

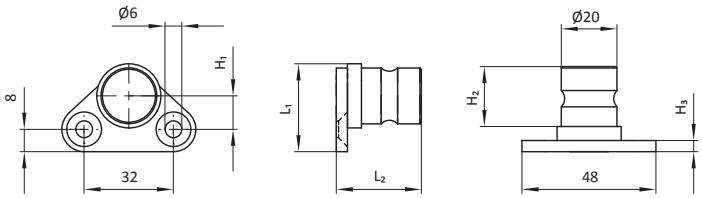

Part No.	Description	D_1 [mm]	H_1 [mm]	H_2 [mm]	H_3 [mm]	L_1 [mm]	L_2 [mm]	m [kg]
15382	MKS-AW01	20	12	21,5	4	31,5	30,5	0,10
15688	MKS-AW22	25	18	26,5	8	40	39,5	0,17

4. Tooling Tubes

Index

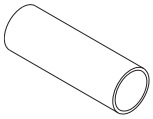

Tube **134**

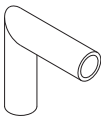

Tube Angle **137**

Technical changes and errors are subject to change without notice!

Tube

Description	Part No.
MKSXX-PRXX-X-XXXX	see table

Type: universal

Material: see table

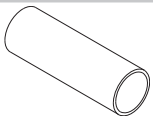

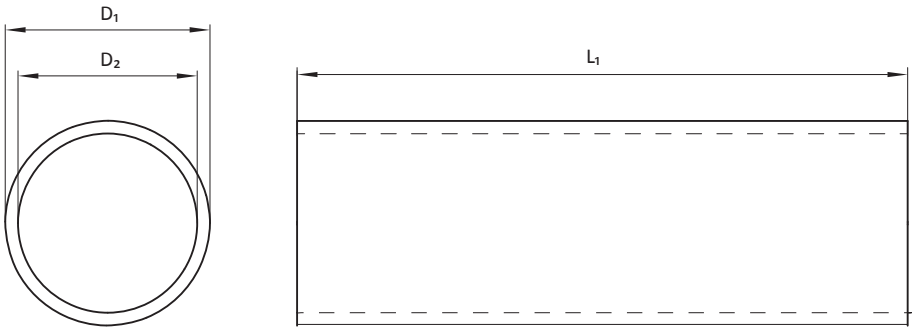

Part No.	Description	D_1 [mm]	D_2 [mm]	L_1 [mm]	Material	m [kg]
16332	MKS20-PR01-400	20	15	400	D	0,43
15066	MKS20-PR01-500	20	15	500	D	0,54
100934	MKS20-PR01-600	20	15	600	D	0,65
15068	MKS20-PR01-700	20	15	700	D	0,76
15069	MKS20-PR01-800	20	15	800	D	0,86
16357	MKS20-PR01-1000	20	15	1000	D	1,08
11675	MKS20-PR01-1200	20	15	1200	D	1,29
15577	MKS20-PR01-1500	20	15	1500	D	1,62
15071	MKS20-PR01-2000	20	15	2000	D	2,16
15884	MKS20-PR01-3000	20	15	3000	D	3,24
16912	MKS20-PR01-D100	20	15	100	D	0,11
102370	MKS20-PR01-D150	20	15	150	D	0,16
104623	MKS20-PR01-D200	20	15	200	D	0,22
104624	MKS20-PR01-D250	20	15	250	D	0,27
17466	MKS20-PR01-D300	20	15	300	D	0,32
107789	MKS20-PR02-300	20	16	300	D	0,27
11679	MKS20-PR02-1200	20	16	1200	D	1,07
15578	MKS20-PR02-1500	20	16	1500	D	1,33
17058	MKS20-PR02-2000	20	16	2000	D	1,78
15885	MKS20-PR02-3000	20	16	3000	D	2,66
17706	MKS20-PR03-1000	20	17	1000	D	0,68
15886	MKS20-PR03-3000	20	17	300	D	0,21
15888	MKS20-PR04-3000	20	14	3000	D	3,77
100917	MKS25-PR01-100	25	20	100	D	0,14
100900	MKS25-PR01-200	25	20	200	D	0,28
17779	MKS25-PR01-300	25	20	300	D	0,42
15062	MKS25-PR01-400	25	20	400	D	0,55
15063	MKS25-PR01-500	25	20	500	D	0,69
15064	MKS25-PR01-580	25	20	580	D	0,80
17576	MKS25-PR01-600	25	20	600	D	0,83
17577	MKS25-PR01-750	25	20	750	D	1,04
16352	MKS25-PR01-1000	25	20	1000	D	1,39
11676	MKS25-PR01-1200	25	20	1200	D	1,66
16353	MKS25-PR01-1400	25	20	1400	D	1,94
15580	MKS25-PR01-1500	25	20	1500	D	2,08
17886	MKS25-PR01-1600	25	20	1600	D	2,22
15065	MKS25-PR01-2000	25	20	2000	D	2,77
16354	MKS25-PR01-2400	25	20	2400	D	3,33
15889	MKS25-PR01-3000	25	20	3000	D	4,16
107302	MKS25-PR01-A500	25	23	500	D	0,30
107303	MKS25-PR01-A750	25	23	750	D	0,44
107304	MKS25-PR01-A1500	25	23	1500	D	0,89
107437	MKS25-PR01-A3000	25	23	3000	D	1,78
102127	MKS25-PR02-200	25	21	200	D	0,23
102055	MKS25-PR02-300	25	21	300	D	0,34
11680	MKS25-PR02-1200	25	21	1200	D	1,36

Part No.	Description	D_1 [mm]	D_2 [mm]	L_1 [mm]	Material	m [kg]
15581	MKS25-PR02-1500	25	21	1500	D	1,70
17059	MKS25-PR02-2000	25	21	2000	D	2,27
15890	MKS25-PR02-3000	25	21	3000	D	3,40
17286	MKS25-PR03-400	25	22	400	D	0,35
16419	MKS25-PR03-580	25	22	580	D	0,50
15059	MKS25-PR03-1000	25	22	1000	D	0,87
11683	MKS25-PR03-1200	25	22	1200	D	1,04
14256	MKS25-PR03-1500	25	22	1500	D	1,30
15891	MKS25-PR03-3000	25	22	3000	D	2,61
102247	MKS25-PR04-200	25	19	200	D	0,33
15892	MKS25-PR04-1200	25	19	1200	D	1,95
13934	MKS25-PR04-1500	25	19	1500	D	2,44
104033	MKS25-PR04-1995	25	19	1995	D	3,25
15893	MKS25-PR04-3000	25	19	3000	D	4,88
107659	MKS25-R01-AL-125	25	15	125	A	0,11
103282	MKS25-R01-AL-1000	25	15	1000	A	0,85
106797	MKS25-R01-AL-1200	25	15	1200	A	1,02
106820	MKS25-R01-AL-1500	25	15	1500	A	1,27
101163	MKS25-R01-AL-3000	25	15	3000	A	2,54
102313	MKS30-PR01-150	30	25	150	D	0,25
101370	MKS30-PR01-200	30	25	200	D	0,34
101634	MKS30-PR01-300	30	25	300	D	0,51
101635	MKS30-PR01-400	30	25	400	D	0,68
16545	MKS30-PR01-500	30	25	500	D	0,85
16420	MKS30-PR01-575	30	25	575	D	0,97
100506	MKS30-PR01-600	30	25	600	D	1,02
100936	MKS30-PR01-700	30	25	700	D	1,19
15061	MKS30-PR01-800	30	25	800	D	1,36
16421	MKS30-PR01-825	30	25	825	D	1,40
101941	MKS30-PR01-900	30	25	900	D	1,53
16355	MKS30-PR01-1000	30	25	1000	D	1,70
16422	MKS30-PR01-1075	30	25	1075	D	1,82
11677	MKS30-PR01-1200	30	25	1200	D	2,03
16423	MKS30-PR01-1325	30	25	1325	D	2,25
11678	MKS30-PR01-1500	30	25	1500	D	2,54
105852	MKS30-PR01-1600	30	25	1600	D	2,71
16503	MKS30-PR01-1800	30	25	1800	D	3,05
16105	MKS30-PR01-2000	30	25	2000	D	3,39
14814	MKS30-PR01-3000	30	25	3000	D	5,09
18076	MKS30-PR02-400	30	26	400	D	0,55
102616	MKS30-PR02-450	30	26	450	D	0,62
104032	MKS30-PR02-500	30	26	500	D	0,69
11681	MKS30-PR02-1200	30	26	1200	D	1,66
14815	MKS30-PR02-1500	30	26	1500	D	2,07
17943	MKS30-PR02-2000	30	26	2000	D	2,76
104191	MKS30-PR02-3000	30	26	3000	D	4,14

Material
A → aluminium
D → steel

Tube

Part No.	Description	D_1 [mm]	D_2 [mm]	L_1 [mm]	Material	m [kg]
102703	MKS30-PR03-250	30	27	250	D	0,26
17707	MKS30-PR03-1000	30	27	1000	D	1,05
11684	MKS30-PR03-1200	30	27	1200	D	1,27
15582	MKS30-PR03-1500	30	27	1500	D	1,58
18039	MKS30-PR04-400	30	24	400	D	0,80
13748	MKS30-PR04-750	30	24	750	D	1,50
11693	MKS30-PR04-1200	30	24	1200	D	2,40
16415	MKS30-PR04-1500	30	24	1500	D	3,00
16788	MKS30-PR04-1800	30	24	1800	D	3,60
16510	MKS30-PR04-2000	30	24	2000	D	4,00
101796	MKS30-PR04-3000	30	24	3000	D	5,99
107284	MKS40-PR01-1000	40	35	1000	D	2,31
100456	MKS40-PR01-1500	40	35	1500	D	3,47
17282	MKS40-PR01-1700	40	35	1700	D	3,93
107765	MKS40-PR01-2000	40	35	2000	D	4,62
16356	MKS40-PR01-2200	40	35	2200	D	5,09
13933	MKS40-PR01-3000	40	35	3000	D	6,94
107581	MKS40-PR01-A3000	40	38	3000	D	2,89
106589	MKS40-PR02-250	40	36	250	D	0,47
17033	MKS40-PR02-500	40	36	500	D	0,94
17982	MKS40-PR02-600	40	36	600	D	1,12
17721	MKS40-PR02-1000	40	36	1000	D	1,87
12874	MKS40-PR02-1200	40	36	1200	D	2,25
12925	MKS40-PR02-1500	40	36	1500	D	2,81
16175	MKS40-PR02-2000	40	36	2000	D	3,75
17121	MKS40-PR02-2500	40	36	2500	D	4,69
17034	MKS40-PR02-3000	40	36	3000	D	5,62
105726	MKS40-R03-AL-400	40	34	400	A	0,38
105727	MKS40-R03-AL-600	40	34	600	A	0,56
103417	MKS40-R03-AL-640	40	34	640	A	0,60
105728	MKS40-R03-AL-800	40	34	800	A	0,75
105729	MKS40-R03-AL-1000	40	34	1000	A	0,94
107793	MKS40-R03-AL-1150	40	34	1150	A	1,08
105730	MKS40-R03-AL-1200	40	34	1200	A	1,13
104008	MKS40-R03-AL-1300	40	34	1300	A	1,22
105731	MKS40-R03-AL-1400	40	34	1400	A	1,32
103416	MKS40-R03-AL-1430	40	34	1430	A	1,35
101835	MKS40-R03-AL-1600	40	34	1600	A	1,51
106576	MKS40-R03-Al-3000	40	34	3000	A	2,82
16067	MKS60-PR01-750-R	60	55	750	D	2,66
15793	MKS60-PR01-1000-R	60	55	1000	D	3,55
15794	MKS60-PR01-1200-R	60	55	1200	D	4,25
15795	MKS60-PR01-1400-R	60	55	1400	D	4,96
106724	MKS60-PR01-1600-R	60	55	1600	D	5,67
106727	MKS60-PR01-1700-R	60	55	1700	D	6,03
106879	MKS60-PR01-1800-R	60	55	1800	D	6,38
15796	MKS60-PR01-2000-R	60	55	2000	D	7,09
15797	MKS60-PR01-2500-R	60	55	2500	D	8,86
15798	MKS60-PR01-3000-R	60	55	3000	D	10,64
16425	MKS60-PR02-1000	60	55	1000	D	3,55
16418	MKS60-PR02-1200	60	55	1200	D	4,25
107024	MKS60-PR02-1500	60	55	1500	D	5,32
14725	MKS60-R01-AL-1000	60	50	1000	A	2,33
103283	MKS60-R01-AL-1200	60	50	1200	A	2,80
107553	MKS60-R01-AL-1500	60	50	1500	A	3,50
108265	MKS60-R01-AL-2000	60	50	2000	A	4,67
105424	MKS60-R01-AL-2250	60	50	2250	A	5,25
103394	MKS60-R02-AL-1000	60	48	1000	A	2,75
104030	MKS60-R02-AL-1500	60	48	1500	A	4,12
104148	MKS76-R01-AL-1000	76	68	1000	A	2,44
104149	MKS76-R01-AL-1500	76	68	1500	A	3,66
104152	MKS76-R01-AL-2000	76	68	2000	A	4,88
101500	MKS60-PR01-300	60	55	300	D	1,07
101502	MKS60-PR01-400	60	55	400	D	1,42

Material
A → aluminium
D → steel

Technical changes and errors are subject to change without notice!
www.springer.group
Document Date: CW 43.2024

Tube

Description	Part No.
MKS60-PR0X-X-X-XXXXX	see table

Type: for robot, loose side

Material: steel

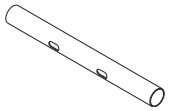

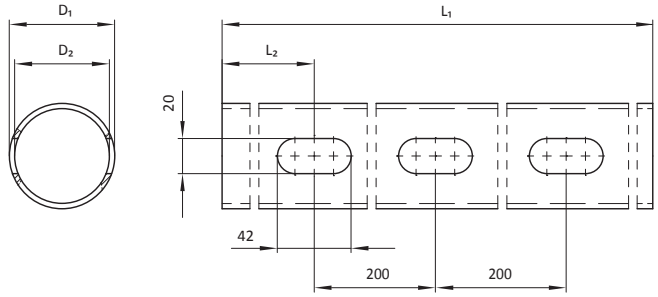

Part No.	Description	D_1 [mm]	D_2 [mm]	L_1 [mm]	L_2 [mm]	Number of long holes	m [kg]
16200	MKS60-PR01-500	60	55	500	450	1	1,68
16201	MKS60-PR01-600	60	55	600	450	1	2,10
16202	MKS60-PR01-700	60	55	700	450	2	2,42
14301	MKS60-PR01-800	60	55	800	450	2	2,78
16203	MKS60-PR01-900	60	55	900	450	3	3,10
13750	MKS60-PR01-1000	60	55	1000	450	3	3,47
16204	MKS60-PR01-1100	60	55	1100	450	4	3,89
13751	MKS60-PR01-1200	60	55	1200	450	4	3,98
16205	MKS60-PR01-1300	60	55	1300	450	5	4,46
14634	MKS60-PR01-1400	60	55	1400	450	5	4,95
12583	MKS60-PR01-1500	60	55	1500	450	6	5,16
106726	MKS60-PR01-1600	60	55	1600	450	6	5,50
15393	MKS60-PR01-1700	60	55	1700	450	7	5,82
16424	MKS60-PR01-1750	60	55	1800	450	7	6,00
13752	MKS60-PR01-2000	60	55	2000	450	8	5,78
13753	MKS60-PR01-2500	60	55	2500	450	11	6,83
13754	MKS60-PR01-3000	60	55	3000	450	13	10,20
17534	MKS60-PR04-1-1200	60	54	1200	850	2	4,57
17535	MKS60-PR04-1-1300	60	54	1300	850	3	5,00
17536	MKS60-PR04-1-1400	60	54	1400	850	3	5,42
17531	MKS60-PR04-1-1500	60	54	1500	850	4	5,84
17537	MKS60-PR04-1-1750	60	54	1750	850	5	6,90
17532	MKS60-PR04-1-2000	60	54	2000	850	6	7,95
17538	MKS60-PR04-1-2500	60	54	2500	850	9	10,06
17533	MKS60-PR04-1-3000	60	54	3000	850	11	12,17
17375	MKS60-PR04-1200	60	54	1200	450	4	4,80
17376	MKS60-PR04-1300	60	54	1300	450	5	5,22
17377	MKS60-PR04-1400	60	54	1400	450	5	5,64
17128	MKS60-PR04-1500	60	54	1500	450	6	6,06
17378	MKS60-PR04-1750	60	54	1750	450	7	7,09
100605	MKS60-PR04-1800	60	54	1800	450	7	7,30
17129	MKS60-PR04-2000	60	54	2000	450	8	8,10
17379	MKS60-PR04-2500	60	54	2500	450	11	10,21
17130	MKS60-PR04-3000	60	54	3000	450	13	12,05
104346	MKS60-PR04-3-E600	60	54	600	200	2	2,43
104347	MKS60-PR04-3-E700	60	54	700	200	3	2,85
104348	MKS60-PR04-3-E800	60	54	800	200	3	3,25
104349	MKS60-PR04-3-E900	60	54	900	200	4	3,65
104350	MKS60-PR04-3-E1000	60	54	1000	200	4	4,06
104351	MKS60-PR04-3-E1100	60	54	1100	200	5	4,46
103897	MKS60-PR04-3-E1200	60	54	1200	200	5	4,89
103898	MKS60-PR04-3-E1400	60	54	1400	200	6	5,69
103899	MKS60-PR04-3-E1600	60	54	1600	200	7	6,50
103900	MKS60-PR04-3-E1800	60	54	1800	200	8	7,31
103901	MKS60-PR04-3-E2000	60	54	2000	200	9	8,12
103902	MKS60-PR04-3-E2400	60	54	2400	200	11	9,74
103903	MKS60-PR04-3-E3000	60	54	3000	200	14	12,16
103965	MKS60-PR04-4-E1400	60	54	1400	200	1	5,88

Tube Angle

Description	Part No.
MKSXX/XX-RW01-DXXX/DXXX-XX	see table

Type: tube double-sided, angle 90°

Material: steel

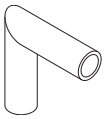

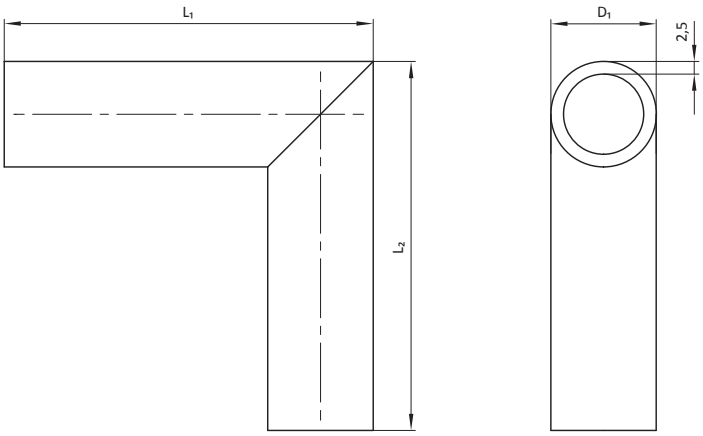

Part No.	Description	D_1 [mm]	L_1 [mm]	L_2 [mm]	m [kg]
11694	MKS20/20-RW01-D075/D075	20	85	85	0,17
11695	MKS20/20-RW01-D100/D100	20	110	110	0,22
11696	MKS20/20-RW01-D150/D150	20	160	160	0,33
11697	MKS20/20-RW01-D200/D200	20	210	210	0,43
11698	MKS20/20-RW01-D250/D250	20	260	260	0,54
11699	MKS20/20-RW01-D300/D300	20	310	310	0,62
105709	MKS20/20-RW01-D500/D500	20	510	510	1,02
15658	MKS25/25-RW01-D075/D075	25	87,5	87,5	0,22
15659	MKS25/25-RW01-D100/D100	25	112,5	112,5	0,28
15660	MKS25/25-RW01-D150/D150	25	162,5	162,5	0,42
15661	MKS25/25-RW01-D200/D200	25	212,5	212,5	0,57
15662	MKS25/25-RW01-D250/D250	25	262,5	262,5	0,70
15663	MKS25/25-RW01-D300/D300	25	312,5	312,5	0,83
106898	MKS25/25-RW01-D350/D350	25	362,5	362,5	0,97
11706	MKS30/30-RW01-D075/D075	30	90	90	0,27
11707	MKS30/30-RW01-D100/D100	30	115	115	0,34
11708	MKS30/30-RW01-D150/D150	30	165	165	0,52
11709	MKS30/30-RW01-D200/D200	30	215	215	0,69
11710	MKS30/30-RW01-D250/D250	30	265	265	0,85
11711	MKS30/30-RW01-D300/D300	30	315	315	1,02
104675	MKS30/30-RW01-D300/D500	30	315	515	1,35
106494	MKS30/30-RW01-D400/D400	30	415	415	1,35

5. Suction Cups and Connections, Ejectors, Spring Plungers and Accessories

Index

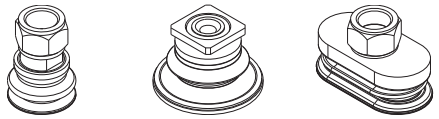

Bellow Suction Cup 141

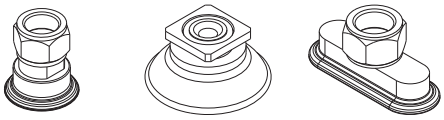

Flat Suction Cup 142

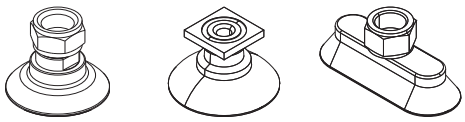

Bell Jar Suction Cup 144

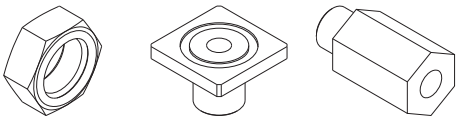

Suction Cup Accessories 146

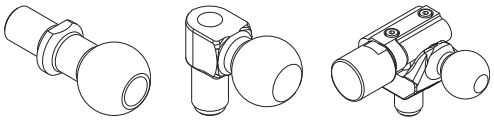

Suction Cup Mounting with Ball 147

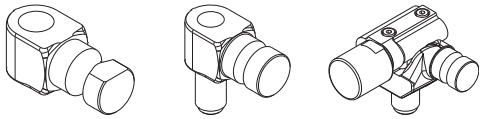

Suction Cup Mounting with Rod Journal 151

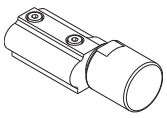

Ejector 155

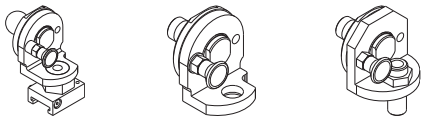

Suction Cup Mounting swivelling 156

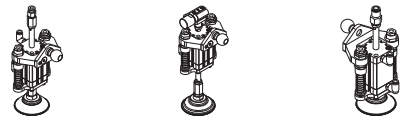

Suction Cup Mounting with additional Stroke 157

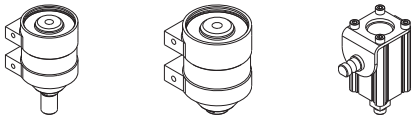

Suction Cup Mounting with Stroke 158

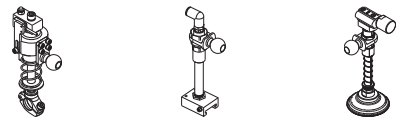

Spring Plunger 159

5. Suction Cups and Connections, Ejectors, Spring Plungers and Accessories

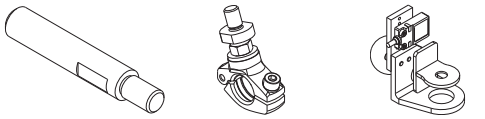

Spring Plunger Accessories 166



Suction Cup Mounting swivelling spring-loaded..... 169

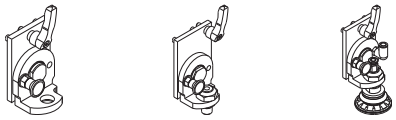

Suction Cup Mounting swivelling..... 170

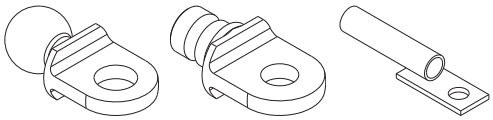

Suction Cup Seat with Ball/Rod Journal/Tube..... 171

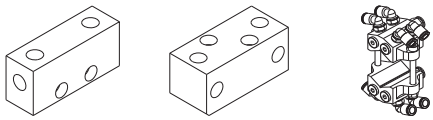

Distribution Block..... 172

Bellow Suction Cup

Description	Part No.
MKS-BS03-XX	see table

Type: round, Ø22mm - Ø40mm

Material: suction cup: NBR
connection: brass

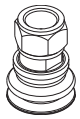

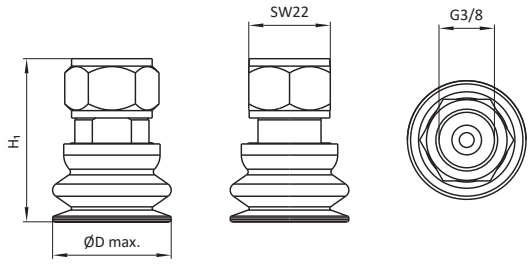

Part No.	Description	D max. [mm]	H_1 [mm]	m [kg]	Material hardness (suction cup) [Shore A]
101287	MKS-BS03-22	24	41	0,04	60
13478	MKS-BS03-30	34	44	0,05	60
13479	MKS-BS03-40	45	44,8	0,05	60

Description	Part No.
MKS-BS03-XXX	see table

Type: round, Ø50mm - Ø125mm

Material: suction cup: NBR
connection: aluminium

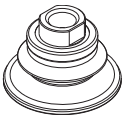

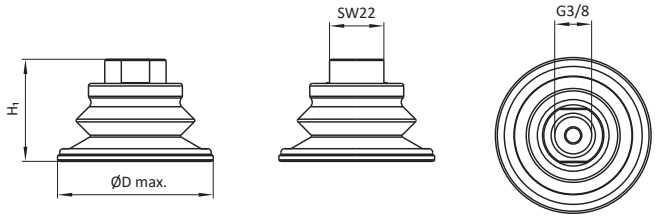

Part No.	Description	D max. [mm]	H_1 [mm]	m [kg]	Material hardness (suction cup) [Shore A]
13480	MKS-BS03-50	56	36,9	0,06	60
13481	MKS-BS03-60	67	41,3	0,04	60
13482	MKS-BS03-80	89	49,9	0,06	60
13483	MKS-BS03-100	110	56,6	0,10	60
13484	MKS-BS03-125	135	67,8	0,17	60

Description	Part No.
MKS-BS02-XXX	see table

Type: round with square adapter, Ø30mm-Ø125mm

Material: suction cup: NBR
connection: aluminium

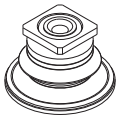

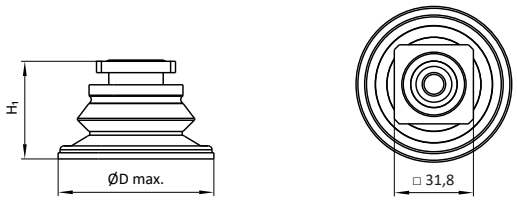

Part No.	Description	D max. [mm]	H_1 [mm]	m [kg]	Material hardness (suction cup) [Shore A]
11719	MKS-BS02-30	34	31,2	0,03	60
11720	MKS-BS02-40	45	31,2	0,03	60
11721	MKS-BS02-50	56	36,6	0,04	60
11722	MKS-BS02-60	67	41	0,05	60
11723	MKS-BS02-80	89	49,6	0,07	60
11724	MKS-BS02-100	110	56,3	0,10	60
11725	MKS-BS02-125	135	67,5	0,17	60

Description	Part No.
MKS-BS02-XXX-ED-RA	see table

Type: round with square adapter, Ø20mm-Ø120mm

Material: suction cup: Elastodur
connection: aluminium

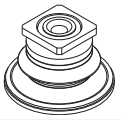

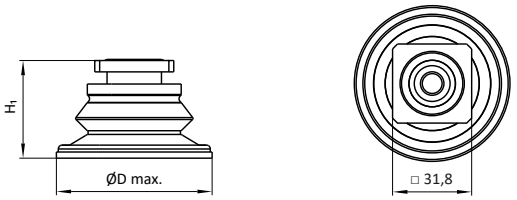

Part No.	Description	D max. [mm]	H_1 [mm]	m [kg]	Material hardness (suction cup) [Shore A]
112970	MKS-BS02-20-ED-RA	23,5	31,7	0,02	85
112971	MKS-BS02-30-ED-RA	33	34,7	0,03	85
112972	MKS-BS02-40-ED-RA	44	35,5	0,03	85
112973	MKS-BS02-50-ED-RA	55	41,6	0,04	85
112974	MKS-BS02-60-ED-RA	66	46,0	0,05	85
112975	MKS-BS02-80-ED-RA	91	54,7	0,05	85
112976	MKS-BS02-100-ED-RA	109	61,3	0,08	85
112977	MKS-BS02-120-ED-RA	131	72,5	0,13	85

Description	Part No.
MKS-BSO02-XXxXXX	see table

Type: oval with square adapter, 30x60mm - 70x140mm

Material: suction cup: NBR
connection: aluminium

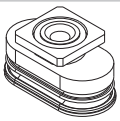

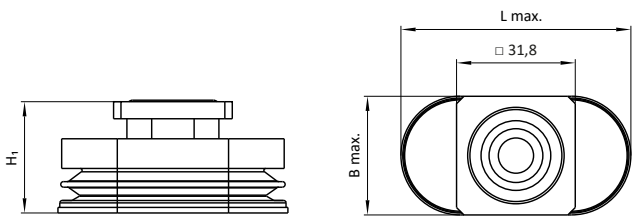

Part No.	Description	B max. [mm]	L max. [mm]	H_1 [mm]	m [kg]	Material hardness (suction cup) [Shore A]
11731	MKS-BSO02-30x60	33	63	30	0,04	60
11732	MKS-BSO02-40x80	43	83	32,7	0,04	60
11733	MKS-BSO02-55x110	59	114	38,5	0,08	60
11734	MKS-BSO02-70x140	75	146	42,5	0,12	60

Description	Part No.
MKS-BSO03-XX-XXX	see table

Type: oval, 30x60mm - 70x140mm

Material: suction cup: NBR
connection: see table

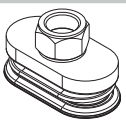

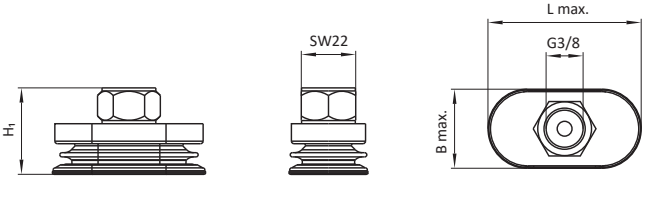

Part No.	Description	B max. [mm]	L max. [mm]	H_1 [mm]	m [kg]	Material hardness (suction cup) [Shore A]	Connection material
13485	MKS-BSO03-30x60	33	63	35	0,06	60	steel
13486	MKS-BSO03-40x80	43	83	37,7	0,06	60	steel
13487	MKS-BSO03-55x110	59	114	43,5	0,11	60	brass
13488	MKS-BSO03-70x140	75	146	47,5	0,12	60	brass

Flat Suction Cup

Description	Part No.
MKS-FS03-XX-XX	see table

Type: round, Ø30mm - Ø40mm

Material: suction cup: NBR
connection: brass



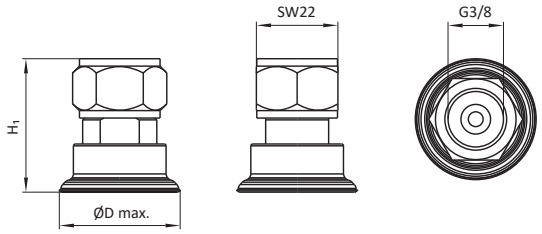

Part No.	Description	D max. [mm]	H_1 [mm]	m [kg]	Material hardness (suction cup) [Shore A]
13462	MKS-FS03-30	34	36	0,04	60
13463	MKS-FS03-40	46	38	0,05	60
15105	MKS-FS03-45-30	34	36	0,04	45
15106	MKS-FS03-45-40	46	38	0,04	45

Description	Part No.
MKS-FS03-XX-XXX	see table

Type: round, Ø50mm - Ø125mm

Material: suction cup: NBR
connection: aluminium

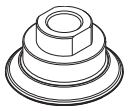

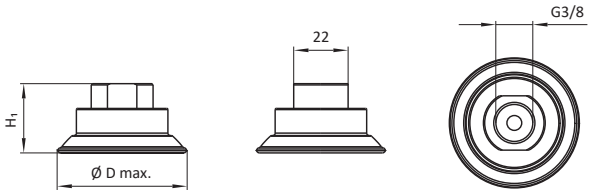

Part No.	Description	D max. [mm]	H_1 [mm]	m [kg]	Material hardness (suction cup) [Shore A]
13468	MKS-FS03-50	56	28	0,05	60
13469	MKS-FS03-60	67	31	0,04	60
13470	MKS-FS03-80	89	35	0,06	60
13396	MKS-FS03-100	110	36	0,07	60
13471	MKS-FS03-125	135	43	0,14	60
15107	MKS-FS03-45-50	56	28	0,03	45
15108	MKS-FS03-45-60	67	31	0,04	45
15109	MKS-FS03-45-80	89	35	0,05	45
15110	MKS-FS03-45-100	110	36	0,07	45
15111	MKS-FS03-45-125	135	43	0,15	45

Description	Part No.
MKS-FS02-XX-XXX	see table

Type: round with square adapter, Ø30mm - Ø125mm

Material: suction cup: NBR
connection: aluminium

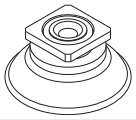

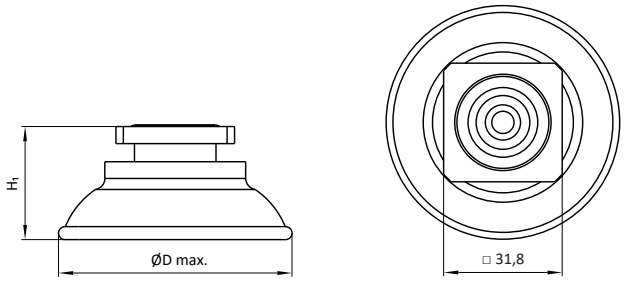

Part No.	Description	D max. [mm]	H_1 [mm]	m [kg]	Material hardness (suction cup) [Shore A]
15098	MKS-FS02-45-30	34	23,2	0,03	45
15099	MKS-FS02-45-40	46	25	0,03	45
15100	MKS-FS02-45-50	56	27,5	0,04	45
15101	MKS-FS02-45-60	67	30,5	0,05	45
15102	MKS-FS02-45-80	89	34,5	0,06	45
15103	MKS-FS02-45-100	110	35,5	0,07	45
15104	MKS-FS02-45-125	135	42,5	0,16	45
11742	MKS-FS02-30	34	23,2	0,03	60
11743	MKS-FS02-40	46	25	0,03	60
11744	MKS-FS02-50	56	27,5	0,04	60
11745	MKS-FS02-60	67	30,5	0,05	60
11746	MKS-FS02-80	89	34,5	0,07	60
11747	MKS-FS02-100	110	35,5	0,08	60
11748	MKS-FS02-125	135	42,5	0,16	60

Description	Part No.
MKS-FSO03-XX-XXxXXX	see table

Type: oval, 16x50mm - 70x140mm

Material: suction cup: NBR
connection: brass

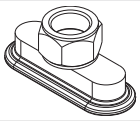

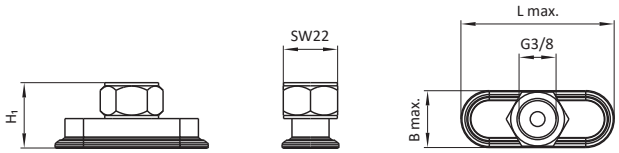

Part No.	Description	B max. [mm]	L max. [mm]	H_1 [mm]	m [kg]	Material hardness (suction cup) [Shore A]
13847	MKS-FSO03-16x50	18	52	34	0,02	60
13472	MKS-FSO03-20x60	25	64	26	0,04	60
13473	MKS-FSO03-30x90	34	94	27	0,02	60
13474	MKS-FSO03-40x80	43	85	28	0,07	60
13475	MKS-FSO03-50x100	54	106	30,5	0,10	60
13476	MKS-FSO03-60x120	65	128	32,5	0,05	60
13477	MKS-FSO03-70x140	76	149	33,5	0,06	60
15128	MKS-FSO03-45-16x50	18	52	34	0,05	45
15129	MKS-FSO03-45-20x60	25	64	26	0,04	45
15130	MKS-FSO03-45-30x90	34	94	27	0,06	45
15131	MKS-FSO03-45-40x80	43	85	28	0,06	45
15132	MKS-FSO03-45-50x100	54	106	30	0,09	45
15133	MKS-FSO03-45-60x120	65	128	32	0,10	45
15134	MKS-FSO03-45-70x140	76	149	33	0,11	45

Flat Suction Cup

Description	Part No.
MKS-FSO02-XX-XXxXXX	see table

Type: oval with square adapter, 16x50mm - 70x140mm

Material: suction cup: NBR
connection: aluminium

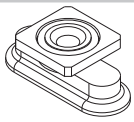

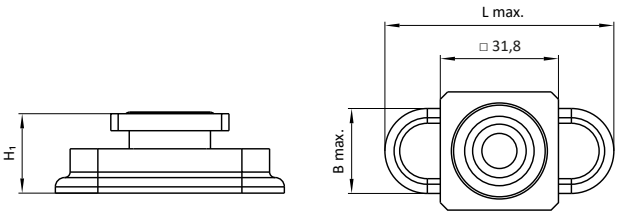

Part No.	Description	B max. [mm]	L max. [mm]	H [mm]	m [kg]	Material hardness (suction cup) [Shore A]
15121	MKS-FSO02-45-16x50	18	52	29	0,03	45
15122	MKS-FSO02-45-20x60	25	64	21	0,03	45
15123	MKS-FSO02-45-30x90	34	94	22	0,05	45
15124	MKS-FSO02-45-40x80	43	85	23	0,04	45
15125	MKS-FSO02-45-50x100	54	106	25	0,07	45
15126	MKS-FSO02-45-60x120	65	128	27	0,09	45
15127	MKS-FSO02-45-70x140	76	149	28	0,09	45
13846	MKS-FSO02-16x50	18	52	29	0,03	60
11759	MKS-FSO02-20x60	25	64	21	0,03	60
11760	MKS-FSO02-30x90	34	94	22	0,05	60
11761	MKS-FSO02-40x80	43	85	23	0,04	60
11762	MKS-FSO02-50x100	54	106	25	0,07	60
11763	MKS-FSO02-60x120	65	128	27	0,09	60
11764	MKS-FSO02-70x140	76	149	28	0,09	60

Bell Jar Suction Cup

Description	Part No.
MKS-GSR03-XXXX-XXX	see table

Type: round, Ø30mm - Ø115mm

Material: suction cup: see table
connection: aluminium

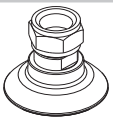

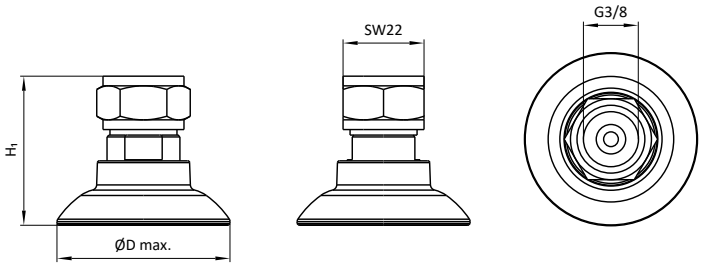

Part No.	Description	D max. [mm]	H_1 [mm]	m [kg]	Material hardness (suction cup) [Shore A]	Suction cup material
101157	MKS-GSR03-S-45	51,5	40,5	0,01	60	NBR
103477	MKS-GSR03-SAXM-30	35,2	35	0,02	85	Elastodur
103478	MKS-GSR03-SAXM-40	45,4	37,6	0,03	85	Elastodur
103479	MKS-GSR03-SAXM-50	58,4	42,8	0,04	85	Elastodur
103480	MKS-GSR03-SAXM-60	69,7	45,3	0,05	85	Elastodur
103481	MKS-GSR03-SAXM-80	92,2	48,3	0,05	85	Elastodur
103482	MKS-GSR03-SAXM-100	111,1	57,2	0,08	85	Elastodur
103483	MKS-GSR03-SAXM-115	129,4	60,1	0,09	85	Elastodur

Description	Part No.
MKS-GSR03-S-XX	see table

Type: round, Ø60mm - Ø80mm

Material: suction cup: NBR
connection: aluminium

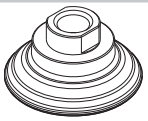

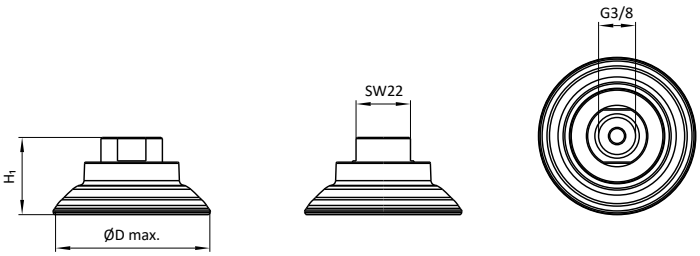

Part No.	Description	D max. [mm]	H_1 [mm]	m [kg]	Material hardness (suction cup) [Shore A]
100445	MKS-GSR03-S-60	70,5	31	0,02	60
100447	MKS-GSR03-S-80	90,7	35	0,05	60

Description	Part No.
MKS-GSR02-XXXX-XXX	see table

Type: round with square adapter, Ø30-Ø115mm

Material: suction cup: see table
connection: aluminium



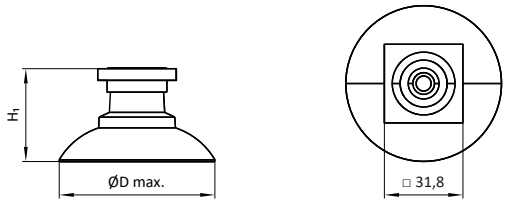

Part No.	Description	D max. [mm]	H_1 [mm]	m [kg]	Material hardness (suction cup) [Shore A]	Suction cup material
100444	MKS-GSR02-S-45	51,5	27,7	0,03	60	NBR
100446	MKS-GSR02-S-60	70,5	30,7	0,04	60	NBR
100451	MKS-GSR02-S-80	90,7	34,7	0,05	60	NBR
104226	MKS-GSR02-SAXM-30	35,2	27,3	0,03	85	Elastodur
104227	MKS-GSR02-SAXM-40	45,4	29,9	0,03	85	Elastodur
104228	MKS-GSR02-SAXM-50	58,4	35,1	0,04	85	Elastodur
104229	MKS-GSR02-SAXM-60	69,7	37,6	0,04	85	Elastodur
104230	MKS-GSR02-SAXM-80	92,2	40,6	0,05	85	Elastodur
104231	MKS-GSR02-SAXM-100	111,1	48,7	0,08	85	Elastodur
104232	MKS-GSR02-SAXM-115	129,4	51,6	0,11	85	Elastodur

Bell Jar Suction Cup

Description	Part No.
MKS-GSO03-XXXX-XX-XXX	see table

Type: oval, 20x60mm - 40x100mm

Material: suction cup: see table
connection: see table

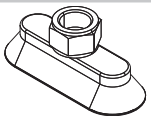

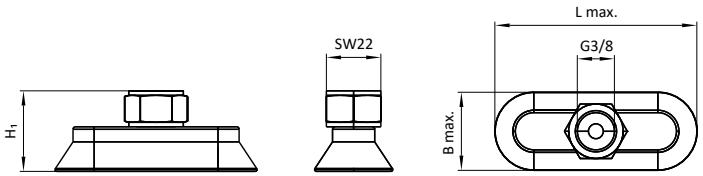

Part No.	Description	B max. [mm]	L max. [mm]	H_1 [mm]	m [kg]	Material hardness (suction cup) [Shore A]	Connection material	Suction cup material
100109	MKS-GSO03-20x60	26	66	29,5	0,04	45	brass	NBR
17927	MKS-GSO03-30x80	36	86	32,5	0,03	45	brass	NBR
17928	MKS-GSO03-40x95	46	102	35,5	0,05	45	brass	NBR
101158	MKS-GSO03-S-20x60	25,8	65,8	28,5	0,01	60	brass	NBR
101159	MKS-GSO03-S-30x80	37,5	86,5	29,5	0,02	60	brass	NBR
101160	MKS-GSO03-S-40x95	46	101	29,5	0,02	60	brass	NBR
105659	MKS-GSO03-SAXM-20x60	24	67	38,5	0,03	85	aluminium	Elastodur
105660	MKS-GSO03-SAXM-30x80	41,5	88	39,1	0,04	85	aluminium	Elastodur
106550	MKS-GSO03-SAXM-40x100	51	109	45,7	0,07	85	aluminium	Elastodur

Description	Part No.
MKS-GSO02-XXXX-XX-XXX	see table

Type: oval, 20x60mm - 40x100mm

Material: suction cup: see table
connection: aluminium

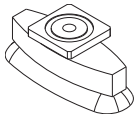

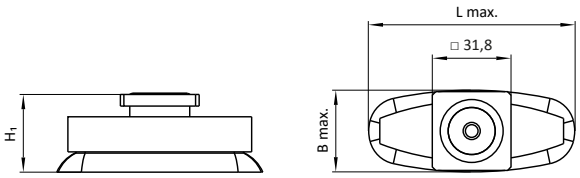

Part No.	Description	B max. [mm]	L max. [mm]	H [mm]	m [kg]	Material hardness (suction cup) [Shore A]	Suction cup material
19866	MKS-GSO02-20x60	26	66	24,5	0,03	45	NBR
17258	MKS-GSO02-30x80	36	86	27,5	0,04	45	NBR
17259	MKS-GSO02-40x95	46	102	30,5	0,05	45	NBR
100448	MKS-GSO02-S-20x60	25,8	65,8	23,5	0,03	60	NBR
100449	MKS-GSO02-S-30x80	37,5	86,5	24,5	0,04	60	NBR
100450	MKS-GSO02-S-40x95	46	101	24,5	0,05	60	NBR
105752	MKS-GSO02-SAXM-20x60	24	67	30,8	0,03	85	Elastodur
105753	MKS-GSO02-SAXM-30x80	41,5	88	31,4	0,05	85	Elastodur
106338	MKS-GSO02-SAXM-40x100	51	109	38,2	0,06	85	Elastodur

Suction Cup Accessories

Description	Part No.
MKS-KMXX	see table

Type: for suction cup, counter nut, incl. O-ring

Material: see table

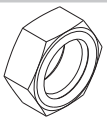

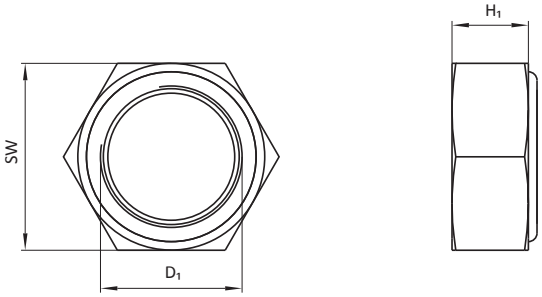

Part No.	Description	D_1 [mm]	H_1 [mm]	SW [mm]	m [kg]	Material
15137	MKS-KM01	G 3/8	9	22	0,02	copper
15760	MKS-KM02	G 1/4	7	17	0,01	steel

Description	Part No.
MKS-ISI-1-AG-X/X“	see table

Type: square adapter for suction cup mounting, incl. O-ring

Material: aluminium

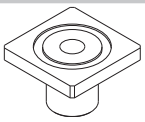

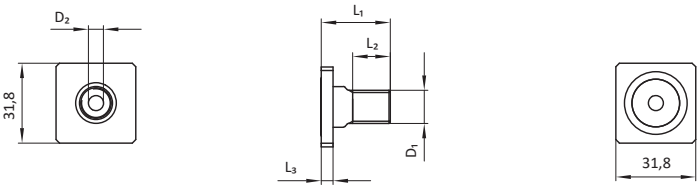

Part No.	Description	D_1 [mm]	D_2 [mm]	L_1 [mm]	L_2 [mm]	L_3 [mm]	m [kg]
15295	MKS-ISI-1-AG-1/4”	G1/4	6	27,5	15	4,7	0,02
15294	MKS-ISI-1-AG-3/8”	G3/8	8	22	14	4,7	0,02

Description	Part No.
MKS-RN05-M10x1,5	105936

Type: extension for suction cup seat

Material: steel

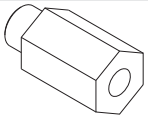

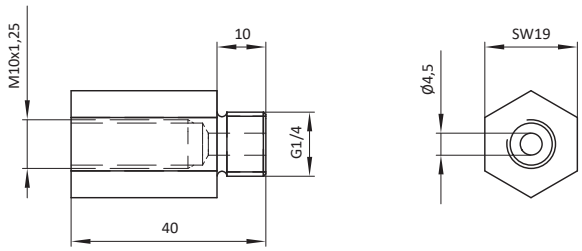

Part No.	Description	m [kg]
105936	MKS-RN05-M10x1-25	0,07

Description	Part No.
MKS-RN02-MXXxX	see table

Type: for suction cup seat

Material: copper



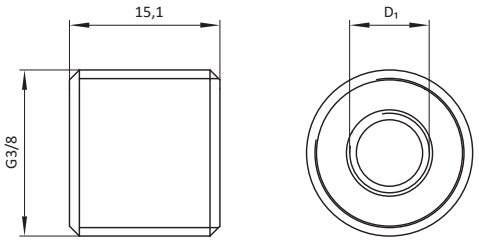

Part No.	Description	D_1 [mm]	m [kg]
14588	MKS-RN02-M8	M8	0,02
14589	MKS-RN02-M10	M10	0,02
17874	MKS-RN02-M10x1,25	M10x1,25	0,02

Suction Cup Mounting with Ball

Description	Part No.
MKS-SAR33-XXAG-X	see table

Type: for ejector, adapter with ball and external thread

Material: aluminium

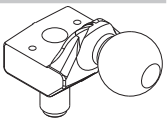

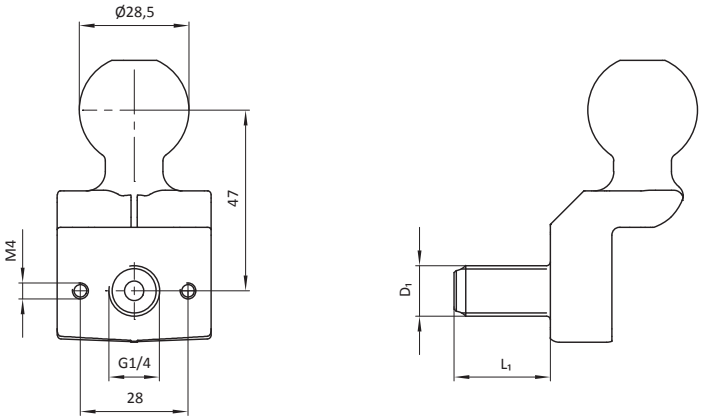

Part No.	Description	D_1 [mm]	L_1 [mm]	m [kg]
100550	MKS-SAR33-14AG-L	G1/4	25	0,10
100163	MKS-SAR33-14AG-K	G1/4	11	0,10
100165	MKS-SAR33-38AG-K	G3/8	12	0,10
100164	MKS-SAR33-38AG-L	G3/8	25	0,10

Description	Part No.
MKS-SAR33-X-X	see table

Type: adapter with ball

Material: aluminium

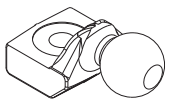

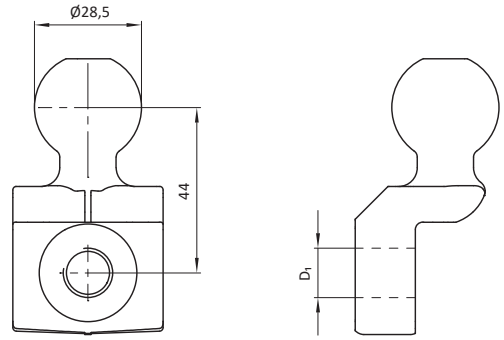

Part No.	Description	D_1 [mm]	m [kg]
100167	MKS-SAR33-G-14IG	G1/4	0,10
100166	MKS-SAR33-G-18,5	18,5	0,09
101034	MKS-SAR33-G-M18x1,5IG	M18x1,5	0,90
101035	MKS-SAR33-G-M18x1IG	M18x1	0,90
103997	MKS-SAR33-G-M20x1,5IG	M20x1,5	0,90

Description	Part No.
MKS-AKU15-1	16518

Type: ball and internal thread

Material: steel

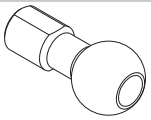

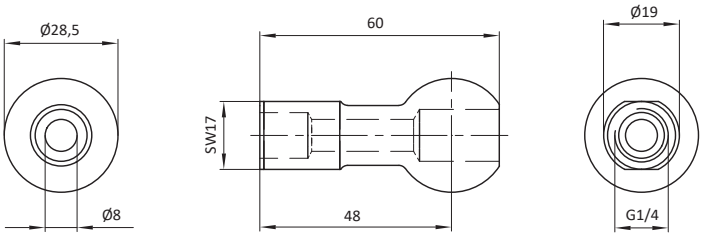

Part No.	Description	m [kg]
16518	MKS-AKU15-1	0,12

Description	Part No.
MKS-AKU19	12516

Type: ball and external thread

Material: steel

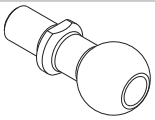

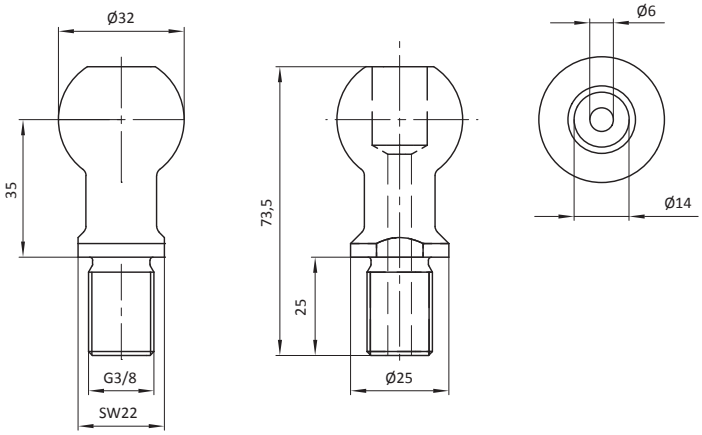

Part No.	Description	m [kg]
12516	MKS-AKU19	0,07

Suction Cup Mounting with Ball

Description	Part No.
MKS-AKUXX-XXX-XXXX-X	see table

Type: ball with external thread, angled, vacuum connection above

Material: aluminium

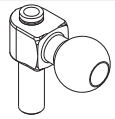

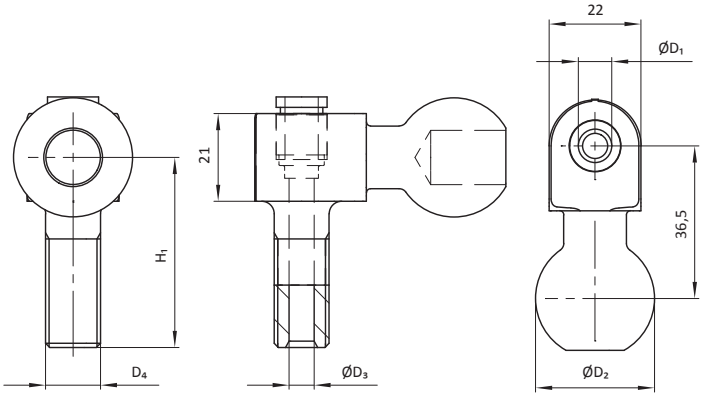

Part No.	Description	D_1 [mm]	D_2 [mm]	D_3 [mm]	D_4 [mm]	m [kg]	with counter nut and O-ring
100973	MKS-AKU44-3	8	28,5	8	G1/4	0,07	no
107015	MKS-AKU83-32-38AG-L-1	G1/4	32	6	G3/8	0,09	yes
103941	MKS-AKU83-32-M10IG-1	G1/4	32	M10	20	0,08	no
100711	MKS-AKU83-32-38AG-L	G1/4	32	6	G3/8	0,08	no
100673	MKS-AKU83-285-38AG-L	G1/4	28,5	6	G3/8	0,07	no
100671	MKS-AKU83-285-14AG-L	G1/4	28,5	5	G1/4	0,07	no
15359	MKS-AKU44-2	6	28,5	6	G1/4	0,07	no
15358	MKS-AKU44-1	4	28,5	4	G1/4	0,07	no

Description	Part No.
MKS-AKUXX-XXX-XXXX-X-X	see table

Type: ball with external thread, angled, vacuum connection beside

Material: aluminium

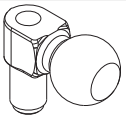

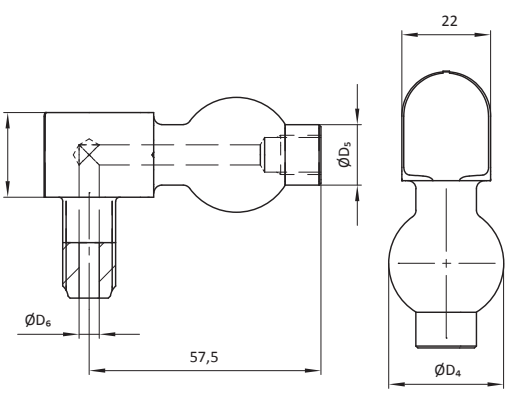

Part No.	Description	D_1 [mm]	D_2 [mm]	D_3 [mm]	D_4 [mm]	D_5 [mm]	D_6 [mm]	H_1 [mm]	m [kg]
101208	MKS-AKU83-285-14AG-L-1	G1/8	5	G1/4	28,5	15	5	35,5	0,08
101209	MKS-AKU83-285-14AG-L-2	G1/4	5	G1/4	28,5	19	5	35,5	0,08
101207	MKS-AKU83-285-38AG-L-2	G1/4	6	G3/8	28,5	19	6	38,5	0,08
101206	MKS-AKU83-285-38AG-L-1	G1/8	6	G3/8	28,5	15	6	38,5	0,08
102997	MKS-AKU83-32-38AG-L-2	G1/4	6	G3/8	32	19	6	38,5	0,08

Description	Part No.
MKS-AKU100	107751

Type: adapter with ball and external thread, with counter nut

Material: steel

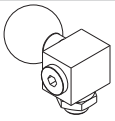

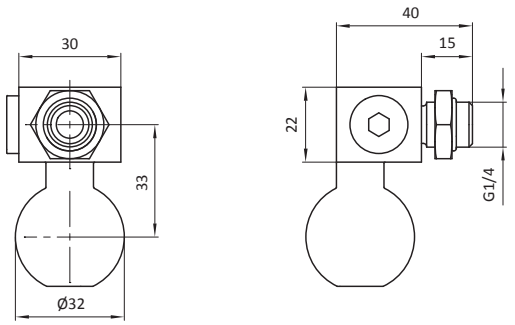

Part No.	Description	m [kg]
107751	MKS-AKU100	0,25

Suction Cup Mounting with Ball

Description	Part No.
MKS-EKU09-XXAG-0-L	see table

Type: with ball, left, with ejector

Material: material mix

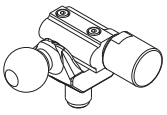

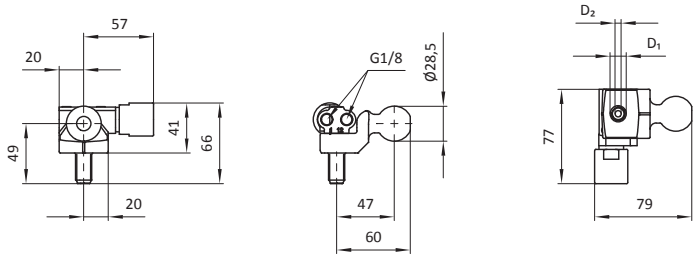

Part No.	Description	D_1 [mm]	D_2 [mm]	m [kg]
17959	MKS-EKU09-14AG-0-L	G1/4	5	0,19
17958	MKS-EKU09-38AG-0-L	G3/8	6	0,19

Description	Part No.
MKS-EKU09-XXAG-0-R	see table

Type: with ball, right, with ejector

Material: material mix

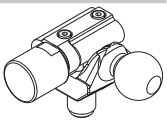

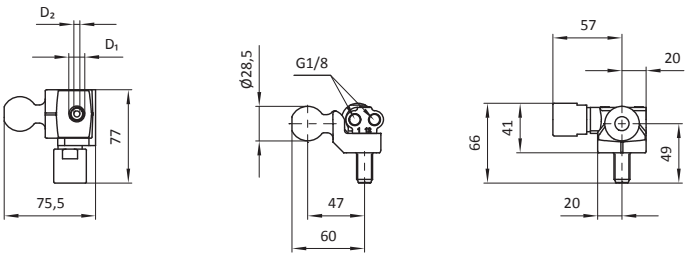

Part No.	Description	D_1 [mm]	D_2 [mm]	m [kg]
17208	MKS-EKU09-14AG-0-R	G1/4	5	0,19
19702	MKS-EKU09-38AG-0-R	G3/8	6	0,22

Description	Part No.
MKS-EKUXX-X-L-XX	see table

Type: with ball, left, with square seat, with ejector

Material: material mix

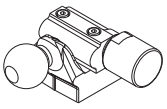

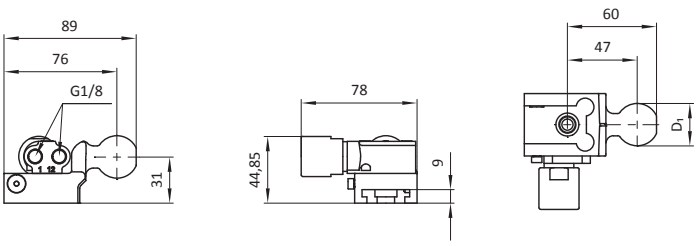

Part No.	Description	D_1 [mm]	Ejector is dirt protected
18672	MKS-EKU08-0-L	28,5	no
104731	MKS-EKU08-0-L-S1	28,5	yes
100698	MKS-EKU11-0-L	32	no

Description	Part No.
MKS-EKUXX-X-R-XX	see table

Type: with ball, right, with square seat, with ejector

Material: material mix

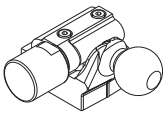

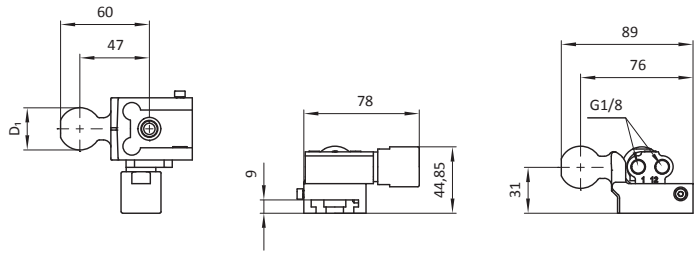

Part No.	Description	D_1 [mm]	Ejector is dirt protected
18691	MKS-EKU08-0-R	28,5	no
104732	MKS-EKU08-0-R-S1	28,5	yes
100699	MKS-EKU11-0-R	32	no

Description	Part No.
MKS-EKU08-X-L-S4	see table

Type: with ball, with ejector, with vacuum switch, with square seat, left

Material: material mix

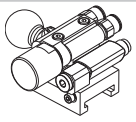

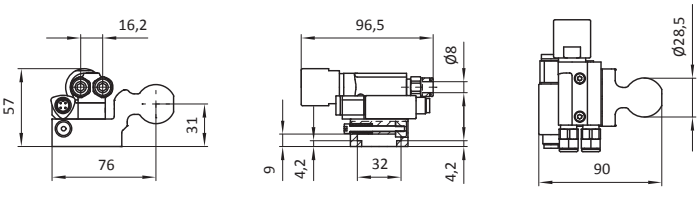

Part No.	Description	Port	m [kg]
107777	MKS-EKU08-2-L-S4	Ø 8mm (2x), metal fitting	0,22
107779	MKS-EKU08-3-L-S4	Ø 8mm (2x), composite fitting	0,22

Description	Part No.
MKS-EKU08-X-R-S4	see table

Type: with ball, with ejector, with vacuum switch, with square seat, right

Material: material mix

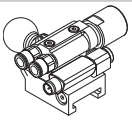

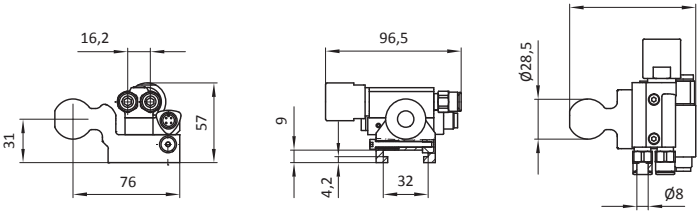

Part No.	Description	Port	m [kg]
107778	MKS-EKU08-2-R-S4	Ø 8mm (2x), metal fitting	0,22
107780	MKS-EKU08-3-R-S4	Ø 8mm (2x), composite fitting	0,22

Suction Cup Mounting with Ball

Description	Part No.
MKS-SAR33-14IG	17778

Type: ball with square seat, angled

Material: aluminium

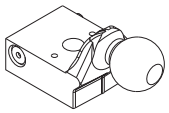

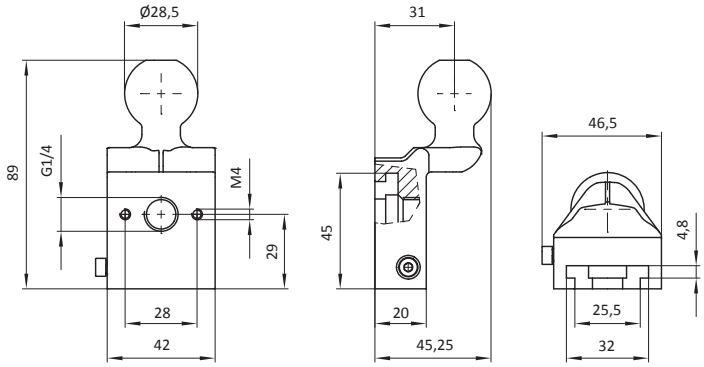

Part No.	Description	m [kg]
17778	MKS-SAR33-14IG	0,14

Suction Cup Mounting with Rod Journal

Description	Part No.
MKS-AW29-W19-X-X	see table

Type: adapter with rod journal

Material: aluminium

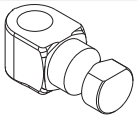

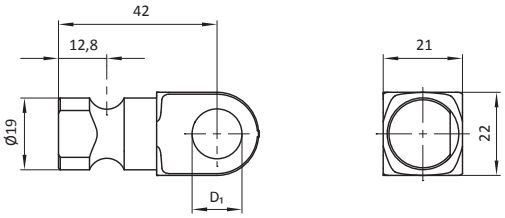

Part No.	Description	D_1 [mm]	m [kg]
101040	MKS-AW29-W19-B-13,2	13,2	0,04
103807	MKS-AW29-W19-M10IG	M10 and G1/4	0,04
100675	MKS-AW29-W19-14IG	G1/4	0,04

Description	Part No.
MKS-SAR02	15576

Type: rod journal with internal thread, angled

Material: aluminium

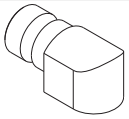

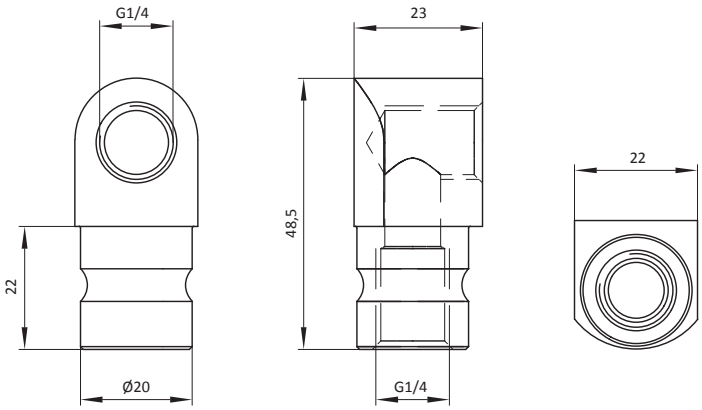

Part No.	Description	m [kg]
15576	MKS-SAR02	0,04

Description	Part No.
MKS-AW29-W20-X-X	see table

Type: adapter with rod journal

Material: aluminium

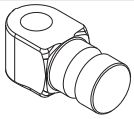

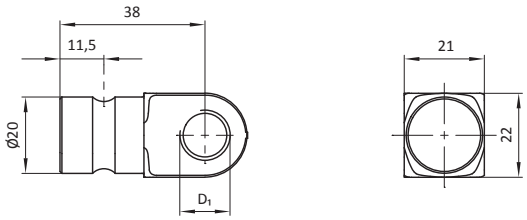

Part No.	Description	D_1 [mm]	m [kg]
100678	MKS-AW29-W20-14IG	G1/4	0,04
101242	MKS-AW29-W20-B-13,2	13,2	0,04

Description	Part No.
MKS-AWXX-WXX-XXAG-L	see table

Type: adapter with rod journal and external thread

Material: aluminium

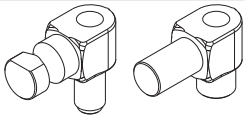

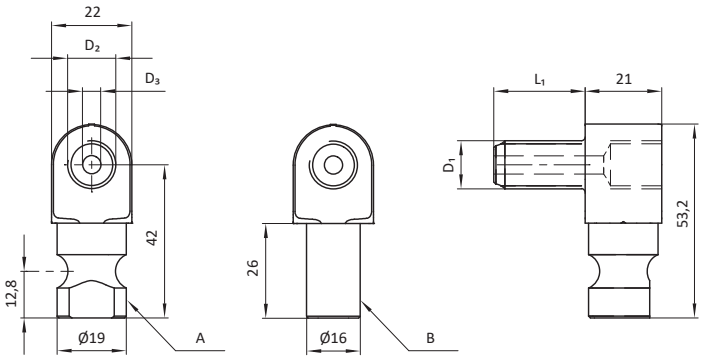

Part No.	Description	Rod journal type	D_1 [mm]	D_2 [mm]	D_3 [mm]	L_1 [mm]	m [kg]
100674	MKS-AW29-W19-14AG-L	A	G1/4	G1/4	5	25	0,05
107728	MKS-AW46-W16-38AG-L	B	G3/8	G1/4	6	15	0,05
100676	MKS-AW29-W19-38AG-L	A	G3/8	G1/4	6	28	0,06

Suction Cup Mounting with Rod Journal

Description	Part No.
MKS-AW29-W19-X-L-X	see table

Type: adapter with rod journal

Material: aluminium

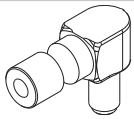

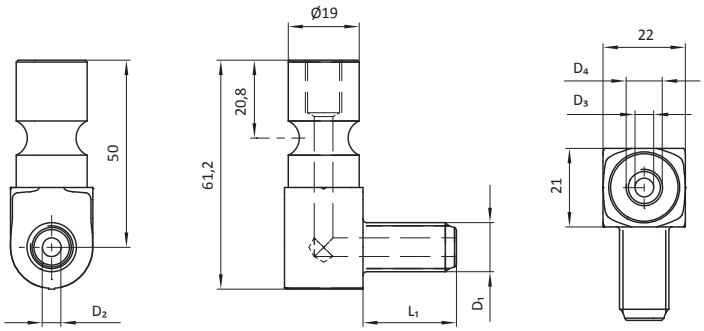

Part No.	Description	D_1 [mm]	D_2 [mm]	D_3 [mm]	D_4 [mm]	L_1 [mm]
101204	MKS-AW29-W19-14AG-L-1	G1/4	5	5	G1/8	25
101205	MKS-AW29-W19-14AG-L-2	G1/4	5	5	G1/4	25
101202	MKS-AW29-W19-38AG-L-1	G3/8	6	6	G1/8	28
101203	MKS-AW29-W19-38AG-L-2	G3/8	6	6	G1/4	28
104725	MKS-AW29-W19-38AG-L-2-S1	G3/8	6	6	G1/4	24

Description	Part No.
MKS-AW29-W20-XXAG-L	see table

Type: adapter with rod journal and external thread

Material: aluminium

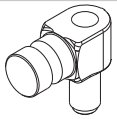

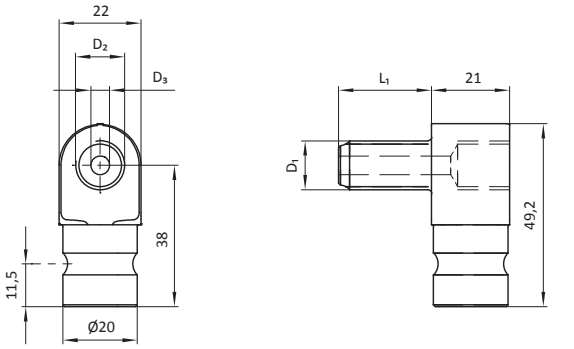

Part No.	Description	D_1 [mm]	D_2 [mm]	D_3 [mm]	L_1 [mm]	m [kg]
100677	MKS-AW29-W20-14AG-L	G1/4	G1/4	5	25	0,05
100679	MKS-AW29-W20-38AG-L	G3/8	G1/4	6	28	0,06
107850	MKS-AW29-W20-18AG-L	G1/8	G1/4	5	9,5	0,05

Description	Part No.
MKS-AW29-W20-XXAG-L-X	see table

Type: adapter with rod journal and external thread

Material: aluminium

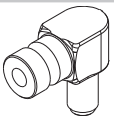

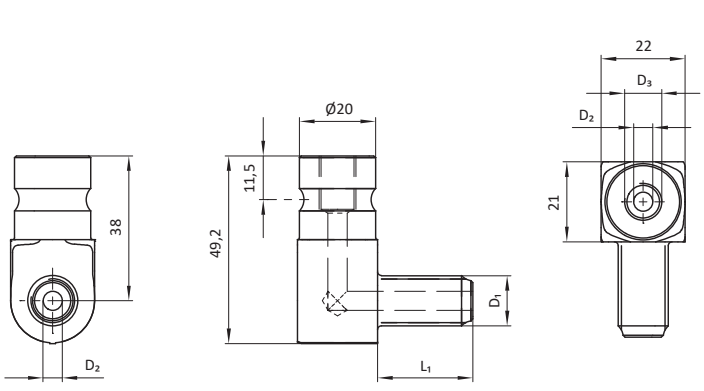

Part No.	Description	D_1 [mm]	D_2 [mm]	D_3 [mm]	L_1 [mm]	m [kg]
101245	MKS-AW29-W20-14AG-L-1	G1/4	5	G1/8	25	0,05
101246	MKS-AW29-W20-14AG-L-2	G1/4	5	G1/4	25	0,05
101243	MKS-AW29-W20-38AG-L-1	G3/8	6	G1/8	28	0,06
101244	MKS-AW29-W20-38AG-L-2	G3/8	6	G1/4	28	0,06

Description	Part No.
MKS-AW33-W19-XXAG-X	see table

Type: adapter with rod journal and external thread

Material: aluminium

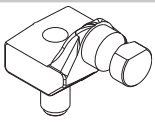

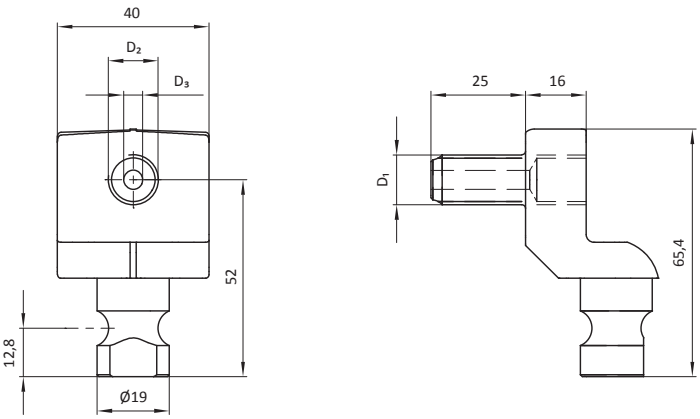

Part No.	Description	D_1 [mm]	D_2 [mm]	D_3 [mm]	L_1 [mm]	m [kg]
100909	MKS-AW33-W19-14AG-L	G1/4	G1/4	5	25	0,09
100910	MKS-AW33-W19-14AG-K	G1/4	G1/4	5	11	0,09
100911	MKS-AW33-W19-38AG-L	G3/8	G1/4	6	25	0,10
100912	MKS-AW33-W19-38AG-K	G3/8	G1/4	6	12	0,09

Suction Cup Mounting with Rod Journal

Description	Part No.
MKS-AW33-W19-X-X	see table

Type: adapter with rod journal and internal thread

Material: aluminium

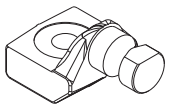

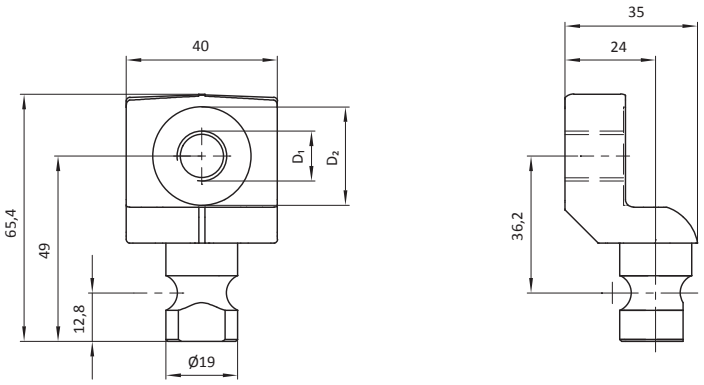

Part No.	Description	D_1 [mm]	D_2 [mm]	m [kg]
101039	MKS-AW33-W19-G-14IG	G1/4	26	0,08
101038	MKS-AW33-W19-B-18,5	18,5	32	0,07
101037	MKS-AW33-W19-G-M18x1IG	M18x1	32	0,08
101036	MKS-AW33-W19-G-M18x1,5IG	M18x1,5	32	0,08

Description	Part No.
MKS-EJW02-XXAG-0-L	see table

Type: with rod journal, left, with ejector

Material: material mix

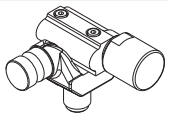

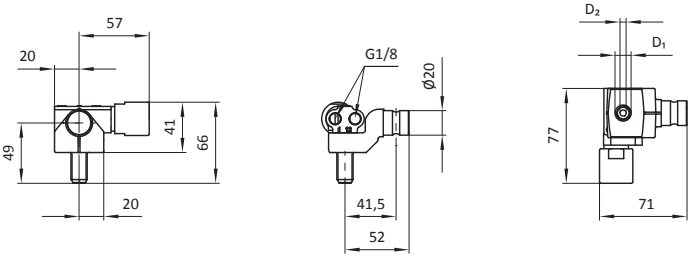

Part No.	Description	D_1 [mm]	D_2 [mm]	m [kg]
17961	MKS-EJW02-14AG-0-L	G1/4	5	0,18
17960	MKS-EJW02-38AG-0-L	G3/8	6	0,18

Description	Part No.
MKS-EJW02-XXAG-0-R	see table

Type: with rod journal, right, with ejector

Material: material mix

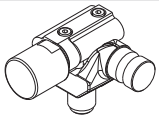

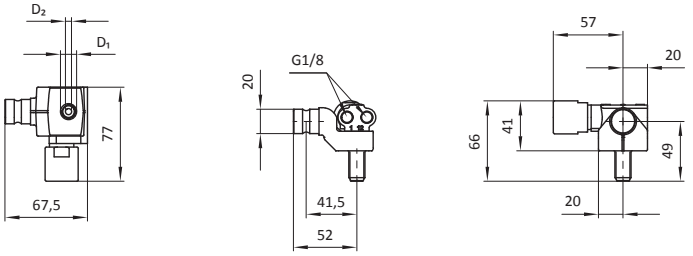

Part No.	Description	D_1 [mm]	D_2 [mm]	m [kg]
17590	MKS-EJW02-14AG-0-R	G1/4	5	0,17
100700	MKS-EJW02-38AG-0-R	G3/8	6	0,18

Description	Part No.
MKS-AWXX-W1X-XXIG	see table

Type: rod journal with quick-change coupling, angled

Material: aluminium

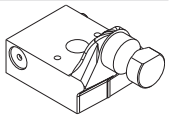

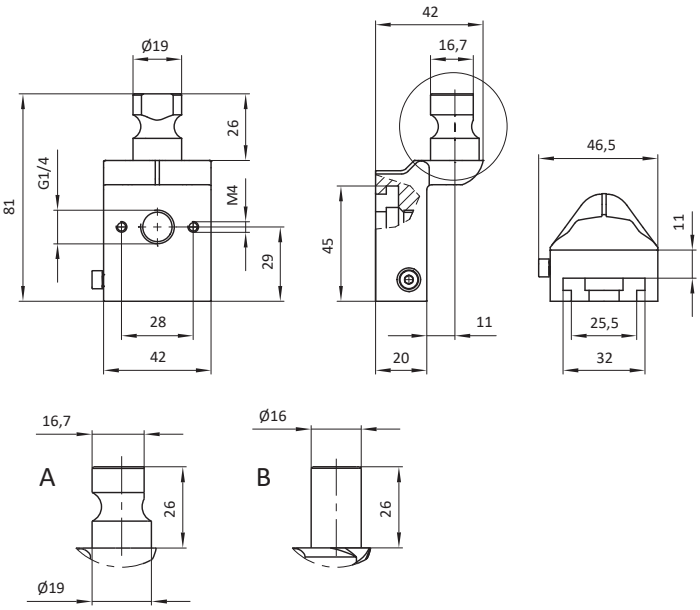

Part No.	Description	m [kg]	Rod journal type
101042	MKS-AW33-W19-14IG	0,12	A
107727	MKS-AW45-W16-IG	0,12	B

Suction Cup Mounting with Rod Journal

Description	Part No.
MKS-AW33-W20-XXAG-X	see table

Type: adapter with rod journal and external thread

Material: aluminium

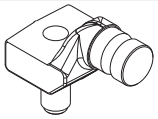

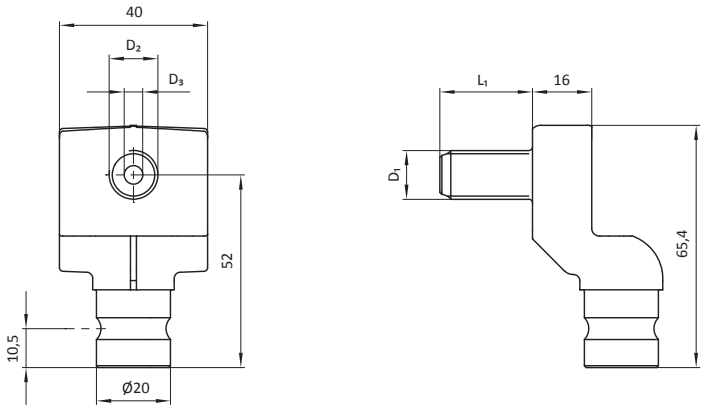

Part No.	Description	D_1 [mm]	D_2 [mm]	D_3 [mm]	L_1 [mm]	m [kg]
101164	MKS-AW33-W20-14AG-L	G1/4	5	G1/4	25	0,10
101165	MKS-AW33-W20-14AG-K	G1/4	5	G1/4	11	0,09
101162	MKS-AW33-W20-38AG-K	G3/8	6	G1/4	12	0,09
101161	MKS-AW33-W20-38AG-L	G3/8	6	G1/4	25	0,10

Description	Part No.
MKS-AW33-W20-X-X	see table

Type: adapter with rod journal and internal thread

Material: aluminium

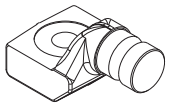

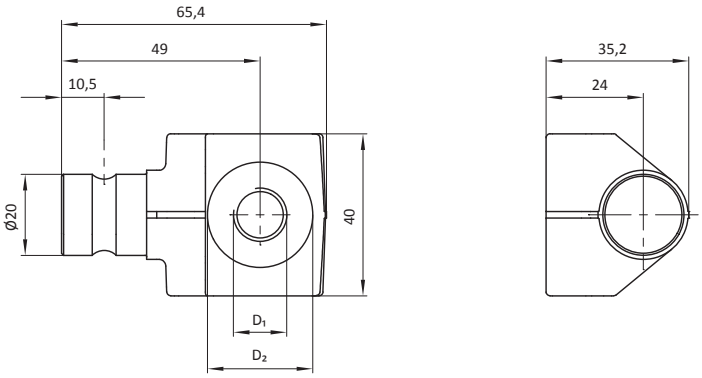

Part No.	Description	D_1 [mm]	D_2 [mm]	m [kg]
101169	MKS-AW33-W20-G-14IG	G1/4	26	0,07
101168	MKS-AW33-W20-B-18,5	18,5	32	0,08
101167	MKS-AW33-W20-G-M18x1IG	M18x1	32	0,08
101166	MKS-AW33-W20-G-M18x1,5IG	M18x1,5	32	0,08

Description	Part No.
MKS-AW43-20	106485

Type: for suction cup, with rod journal

Material: aluminium

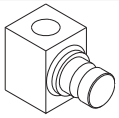

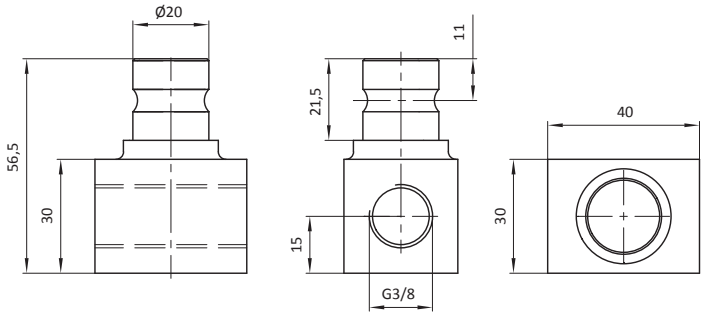

Part No.	Description	m [kg]
106485	MKS-AW43-20	0,10

Ejector

Description	Part No.
MKS-SEA-C-10-S1	104733

Type: decentralised, with strainers in ports

Material: material mix

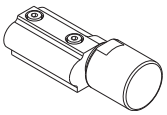

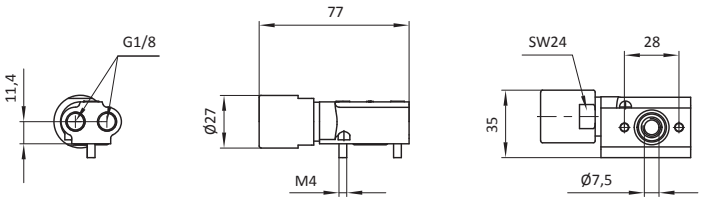

Part No.	Description	m [kg]
104733	MKS-SEA-C-10-S1	0,07

Suction Cup Mounting swivelling

Description	Part No.
MKS-SARXX-X	see table

Type: basic version, with ball (without suction cup, without thread connection)

Material: material mix

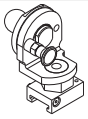

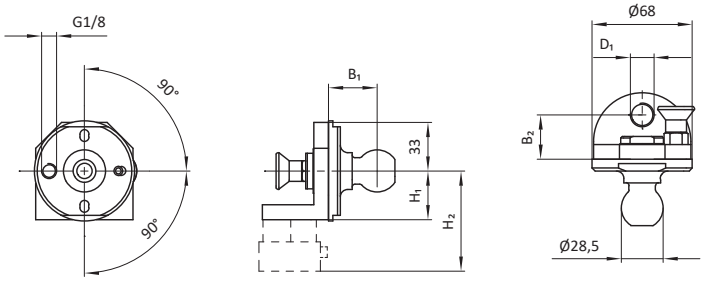

Part No.	Description	D_1 [mm]	H_1 [mm]	H_2 [mm]	B_1 [mm]	B_2 [mm]	Swivel angle	Square seat with 15mm extension
19966	MKS-SAR28-1	M16x1,5	33	-	33	30	90°	no
100732	MKS-SAR43-1	M30x1,5	42	-	34	34	90°, 180°, 270°	no
108066	MKS-SAR43-5	M30x1,5	42	77	34	34	90°	yes

Description	Part No.
MKS-SARXX-X	see table

Type: basic version, with rod journal (without suction cup, without thread connection)

Material: material mix



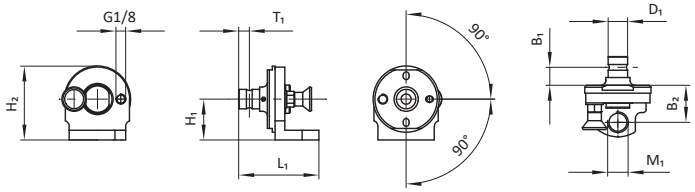

Part No.	Description	D_1 [mm]	M_1 [mm]	H_1 [mm]	H_2 [mm]	B_1 [mm]	B_2 [mm]	L_1 [mm]	T_1 [mm]	m [kg]
17049	MKS-SAR28	20	M16x1,5	33	67	18,5	38	82,5	11	0,34
17789	MKS-SAR34	20	M20x1,5	42	76	18,5	38	82,5	11	0,37
104406	MKS-SAR34-5	19	M20x1,5	42	78	21	43	95	13	0,36

Description	Part No.
MKS-SAR28-2	100178

Type: with rod journal, without suction cup, with thread connection

Material: material mix

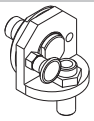

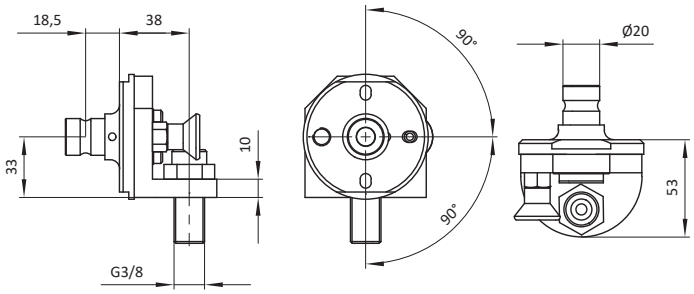

Part No.	Description	m [kg]
100178	MKS-SAR28-2	0,40

Suction Cup Mounting with additional Stroke

Description	Part No.
MKS-SAMF03-50-K285-S2	106623

Type: with ball, with spring plunger, with elbow fittings Ø8mm, with straight fitting Ø8mm

Material: material mix

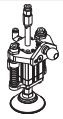

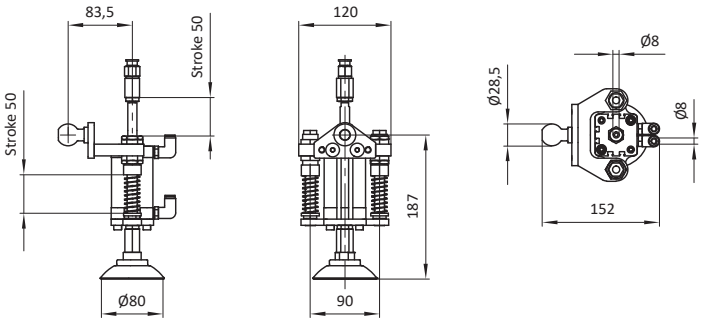

Part No.	Description	m [kg]
106623	MKS-SAMF03-50-K285-S2	1,50

Description	Part No.
MKS-SAMF03-50-K285-S1	105873

Type: with ball, with ejector, with spring plunger, with elbow fittings Ø8mm

Material: material mix

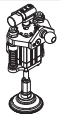

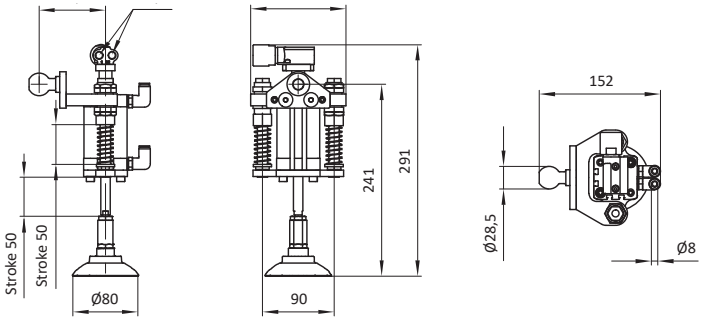

Part No.	Description	m [kg]
105873	MKS-SAMF03-50-K285-S1	1,80

Description	Part No.
MKS-SAMF03-X0-K285	see table

Type: with ball, with spring plunger, with elbow fittings Ø8mm, with straight fitting Ø8mm

Material: material mix



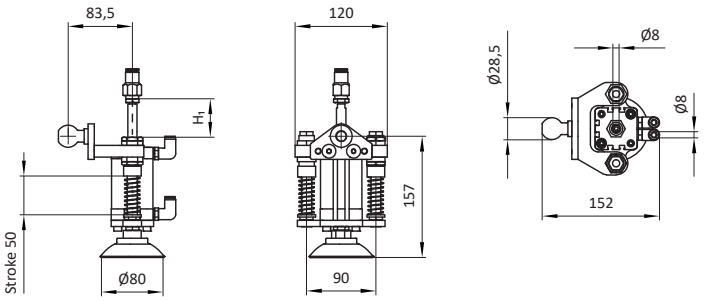

Part No.	Description	H_1/stroke [mm]	m [kg]
105935	MKS-SAMF03-50-K285	50	1,36
104703	MKS-SAMF03-80-K285	80	1,70

Suction Cup Mounting with Stroke

Description	Part No.
MKS-SAR27-1-XX	see table

Type: with external thread

Material: aluminium

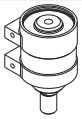

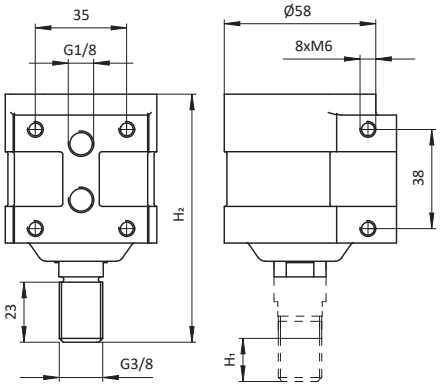

Part No.	Description	H_1/stroke [mm]	H_2 [mm]	m [kg]
17526	MKS-SAR27-1-15	15	95	0,4
17752	MKS-SAR27-1-30	30	110	0,41
17753	MKS-SAR27-1-50	50	130	0,47

Description	Part No.
MKS-SAR27-3-XX	see table

Type: with internal thread

Material: aluminium



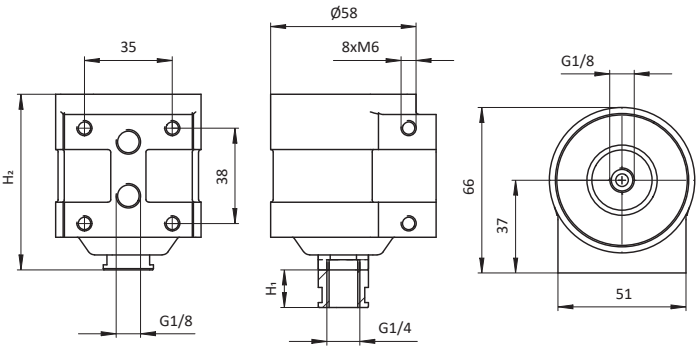

Part No.	Description	H_1/stroke [mm]	H_2 [mm]	m [kg]
17754	MKS-SAR27-3-15	15	70	0,39
17708	MKS-SAR27-3-30	30	85	0,42
17709	MKS-SAR27-3-50	50	105	0,47

Description	Part No.
MKS-SAR53-50-XX-W19	see table

Type: with external thread, with rod journal

Material: material mix

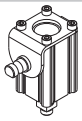

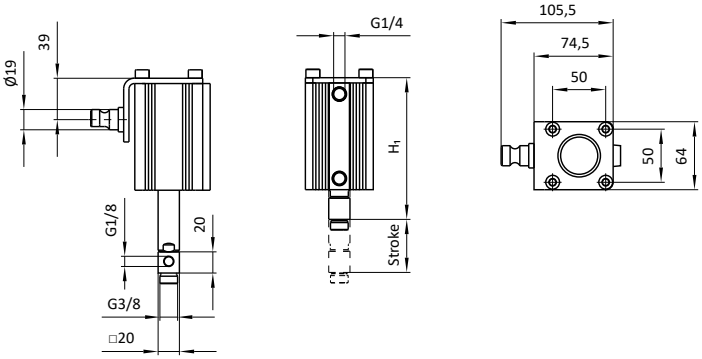

Part No.	Description	H_1 [mm]	Stroke [mm]
107489	MKS-SAR53-50-50-W19	133,5	50
107493	MKS-SAR53-50-75-W19	158,5	75

Spring Plunger

Description	Part No.
MKS-FST06-XXX-AL-S9-X	see table

Type: see table

Material: material mix

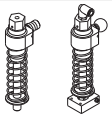

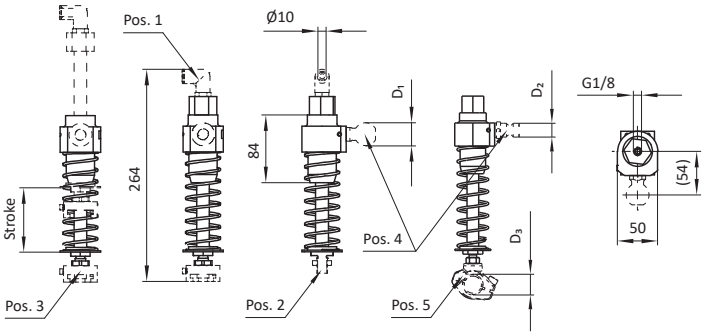

Part No.	Description	Stroke [mm]	D_1 [mm]	D_2 [mm]	D_3 [mm]	m [kg]	Elbow fitting [Pos. 1]	Suction cup seat [Pos. 2]	Square seat [Pos. 3]	Ball / rod journal [Pos. 4]	Ball mounting [Pos. 5]
106771	MKS-FST06-100-AL-S9	100	-	-	-	0,63	-	-	-	-	-
106792	MKS-FST06-100-AL-S9-1	100	28,5	-	-	0,95	yes (Ø10 mm)	G1/4 AG	yes	ball	-
107380	MKS-FST06-100-AL-S9-2	100	-	19	28,5	1,08	-	-	-	rod journal	yes
107821	MKS-FST06-100-AL-S9-3	100	-	20	-	1,08	-	G3/8 AG	-	rod journal	-
106822	MKS-FST06-80-AL-S9	80	-	-	-	0,68	-	-	-	-	-
106821	MKS-FST06-80-AL-S9-1	80	28,5	-	-	0,92	yes (Ø10 mm)	G1/4 AG	yes	ball	-

Description	Part No.
MKS-FST06-V-50-AL-X	see table

Type: see table

Material: material mix



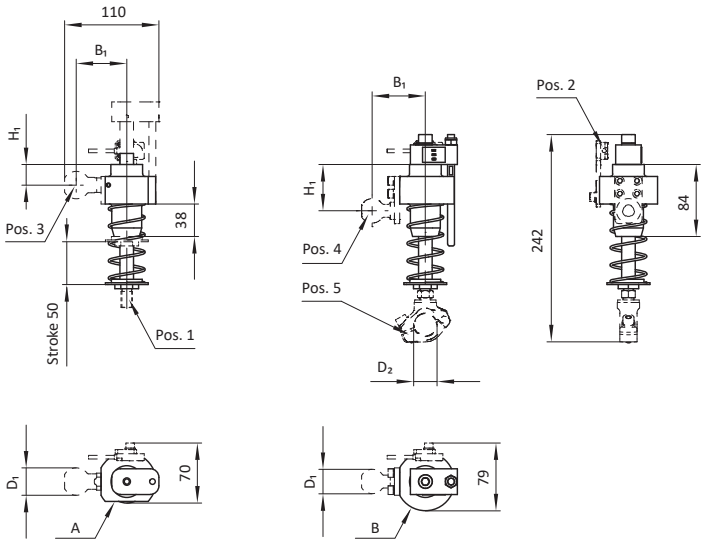

Part No.	Description	D_1 [mm]	D_2 [mm]	H_1 [mm]	B_1 [mm]	m [kg]	Suction cup seat [Pos. 1]	Sensor [Pos. 2]	Ball [Pos. 3]	Ball, staggered [Pos. 4]	Ball mounting [Pos. 5]	Base body type
106838	MKS-FST06-V-50-AL	-	-	-	-	0,73	-	-	-	-	-	A
106791	MKS-FST06-V-50-AL-1	32	-	24	26	0,94	G1/4	yes	yes	-	-	A
106971	MKS-FST06-V-50-AL-2	32	32	54	59	1,11	-	-	-	yes	yes	B
107505	MKS-FST06-V-50-AL-3	32	32	54	59	1,20	-	yes	-	yes	yes	B
107651	MKS-FST06-V-50-AL-4	28,5	28,5	54	59	1,08	-	-	-	yes	yes	B

Spring Plunger

Description	Part No.
MKS-FST06-V-100-AL-S8-X	see table

Type: with ball / rod journal, non rotating

Material: material mix



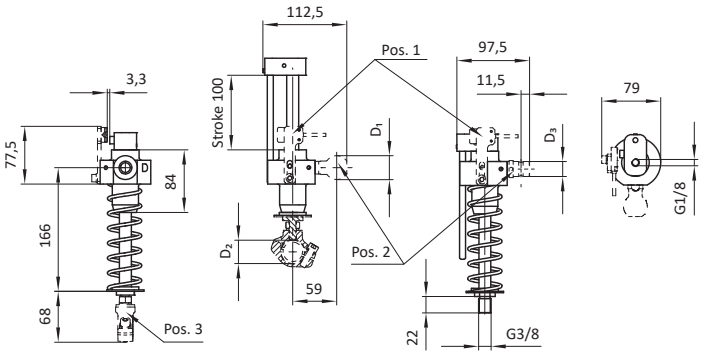

Part No.	Description	D_1 [mm]	D_2 [mm]	D_3 [mm]	Sensor [Pos. 1]	Ball /rod journal [Pos. 2]	Ball mounting [Pos. 3]	m [kg]
106748	MKS-FST06-V-100-AL-S8	-	-	-	no	no	no	0,88
106794	MKS-FST06-V-100-AL-S8-1	32	32	-	yes	ball	yes	1,28
106800	MKS-FST06-V-100-AL-S8-2	-	32	20	no	rod journal	yes	1,31
106957	MKS-FST06-V-100-AL-S8-3	-	-	20	yes	rod journal	no	1,10
107026	MKS-FST06-V-100-AL-S8-4	-	-	20	no	rod journal	no	0,10

Description	Part No.
MKS-SAMF06-45-01	106571

Type: with ball, with seat for sensor (2x), with ejector, internal spring

Material: material mix

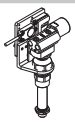

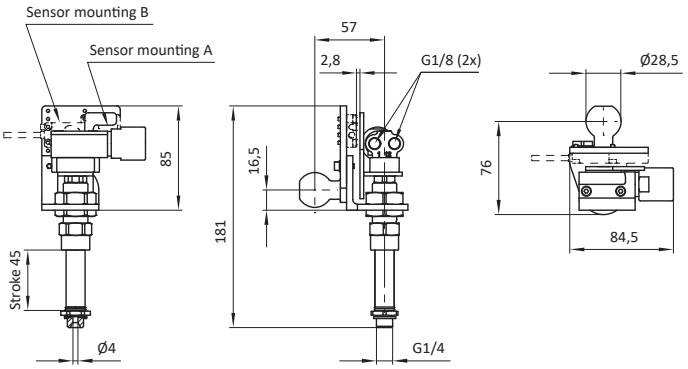

Part No.	Description	m [kg]
106571	MKS-SAMF06-45-01	0,55

Description	Part No.
MKS-SAMF06-20	104968

Type: with ball, with ejector, internal spring

Material: material mix

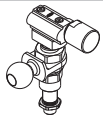

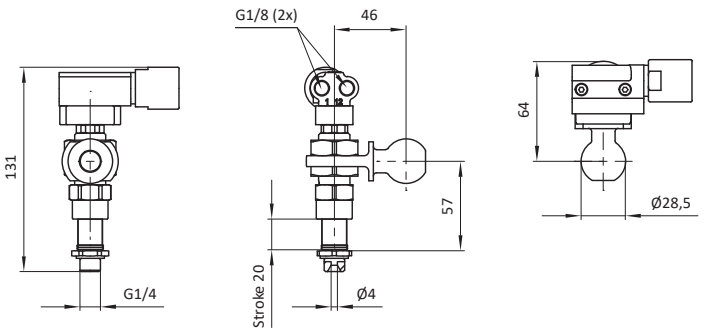

Part No.	Description	m [kg]
104968	MKS-SAMF06-20	0,45

Description	Part No.
MKS-FST06-V-100	15302

Type: with ball

Material: material mix

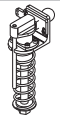

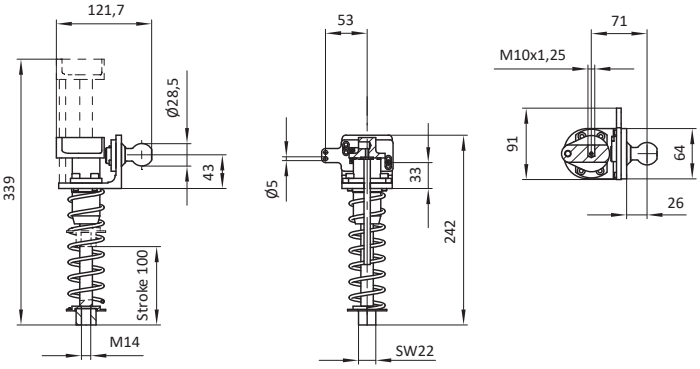

Part No.	Description
15302	MKS-FST06-V-100

Spring Plunger

Description	Part No.
MKS-FST06-V-100-AL-SXX	see table

Type: with ball, non rotating

Material: material mix

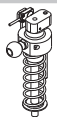

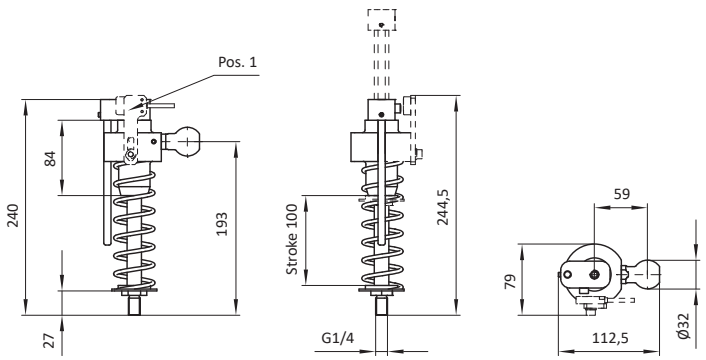

Part No.	Description	m [kg]	Sensor [Pos. 1]	Spring force extracted [N]	Spring force retracted [N]
106544	MKS-FST06-V-100-AL-S6	1,09	yes	22	144
107500	MKS-FST06-V-100-AL-S6A	1,06	yes	10	68
106545	MKS-FST06-V-100-AL-S7	0,98	no	22	144
107501	MKS-FST06-V-100-AL-S7A	0,98	no	10	68

Description	Part No.
MKS-FST06-V-XXX-AL-SXXX	see table

Type: with ball, non rotating

Material: material mix

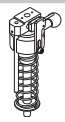

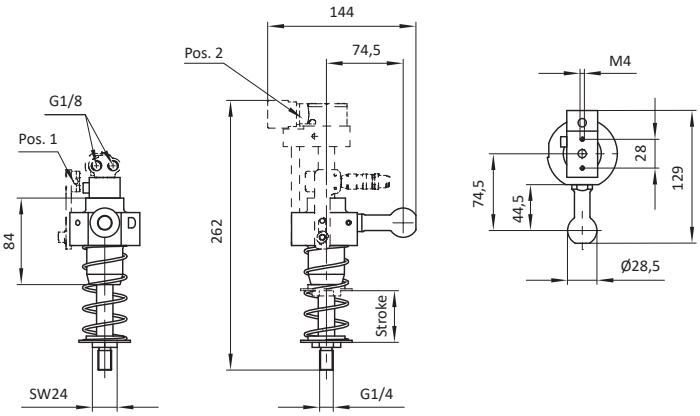

Part No.	Description	Spring force extracted [N]	Spring force retracted [N]	Stroke [mm]	Sensor [Pos. 1]	Ejector [Pos. 2]
107134	MKS-FST06-V-100-AL-S10	22	144	100	yes	no
107135	MKS-FST06-V-100-AL-S11	22	144	100	no	no
107719	MKS-FST06-V-100-AL-S11A	10	68	100	no	no
106523	MKS-FST06-V-100-AL-S4	-	-	100	yes	yes
106524	MKS-FST06-V-100-AL-S5	-	-	100	no	yes
107569	MKS-FST06-V-50-AL-S4	-	-	50	yes	yes
107570	MKS-FST06-V-50-AL-S5	-	-	50	no	yes

Description	Part No.
MKS-FST06-100-V-AL-SX	see table

Type: with ball, non rotating

Material: material mix



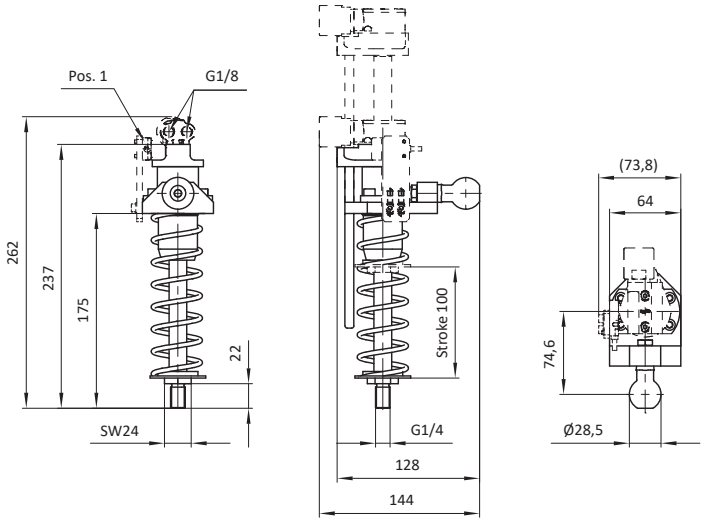

Part No.	Description	m [kg]	Sensor [Pos. 1]
105269	MKS-FST06-V-100-AL-S1	1,00	yes
105270	MKS-FST06-V-100-AL-S2	0,92	no

Description	Part No.
MKS-FST05-X-100	see table

Type: with ball, without spring

Material: material mix

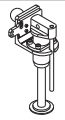

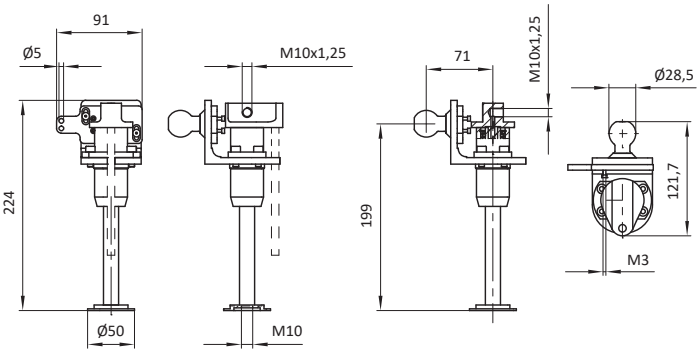

Part No.	Description	Non rotating	m [kg]
14924	MKS-FST05-100	no	1,32
15005	MKS-FST05-V-100	yes	1,38

Spring Plunger

Description	Part No.
MKS-FST06-V-300-001	105426

Type: with ball, non rotating

Material: material mix



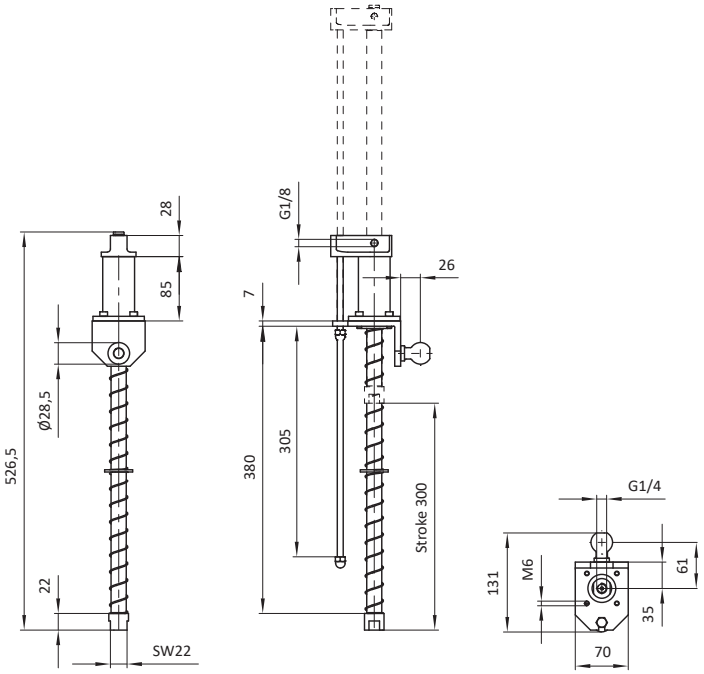

Part No.	Description	m [kg]
105426	MKS-FST06-V-300-001	1,72

Description	Part No.
MKS-FST06-200-007	106818

Type: with ball, with elbow fitting Ø 8mm

Material: material mix



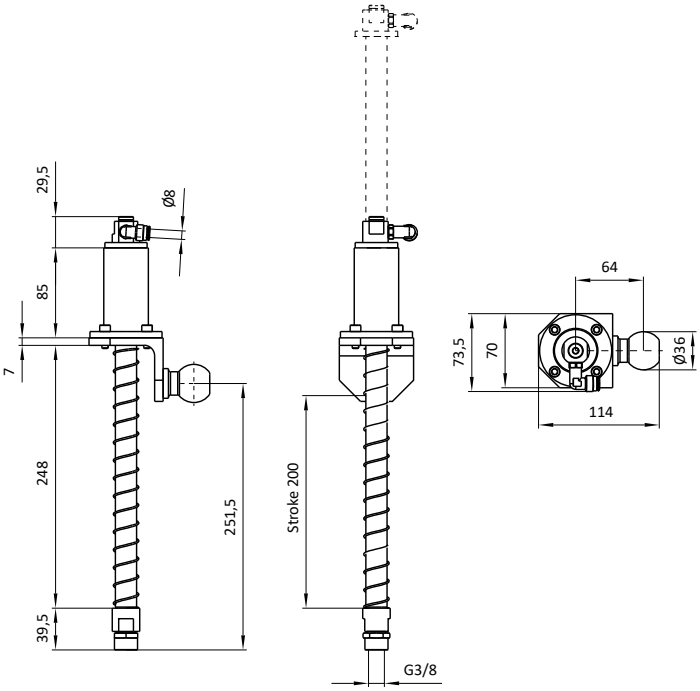

Part No.	Description	m [kg]
106818	MKS-FST06-200-007	1,83

Description	Part No.
MKS-FST08-V-100	17840

Type: with ball, non rotating

Material: material mix

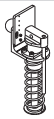

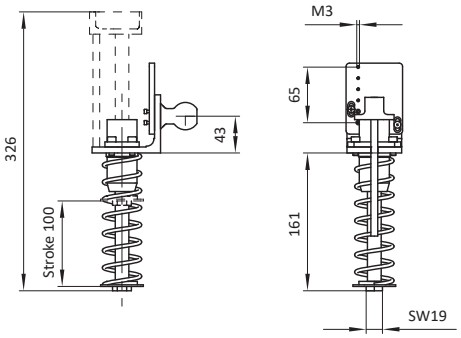

Part No.	Description
17840	MKS-FST08-V-100

Description	Part No.
MKS-FST06-X00-001	see table

Type: with ball

Material: material mix



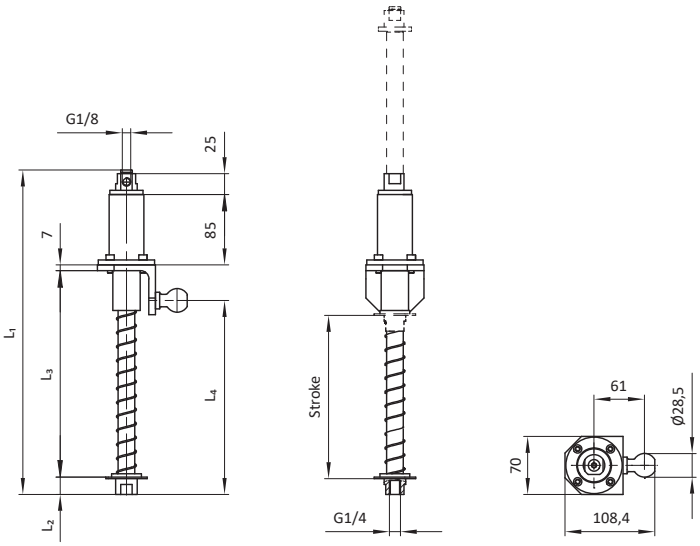

Part No.	Description	Stroke [mm]	L_1 [mm]	L_2 [mm]	L_3 [mm]	L_4 [mm]	m [kg]
19998	MKS-FST06-200-001	200	391,5	21	249	234	1,78
105425	MKS-FST06-300-001	300	523,5	22	380	366	1,72

Spring Plunger

Description	Part No.
MKS-FST22-75	107402

Type: with ball, with sensor, with ejector

Material: material mix



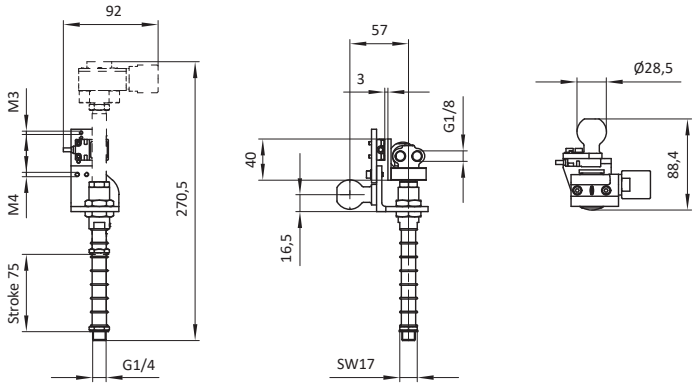

Part No.	Description	m [kg]
107402	MKS-FST22-75	0,56

Description	Part No.
MKS-SAMF06-20-1	107130

Type: with ball, with square seat, with elbow fitting Ø10mm, internal spring

Material: material mix

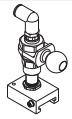

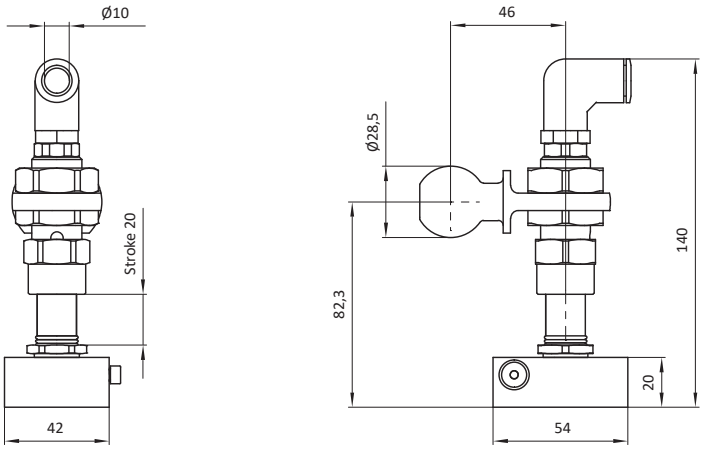

Part No.	Description	m [kg]
107130	MKS-SAMF06-20-1	0,19

Description	Part No.
MKS-SAMF01-20-XXX	see table

Type: with ball, with square seat, with elbow fitting Ø8mm

Material: material mix

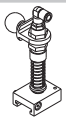

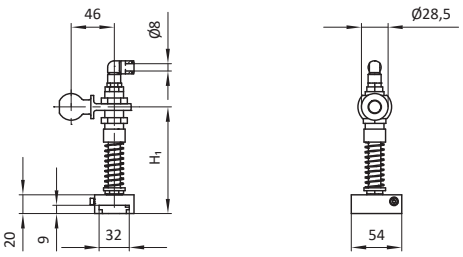

Part No.	Description	H_1 / Stroke [mm]	m [kg]
105669	MKS-SAMF01-20-100	ca. 190	0,60
14443	MKS-SAMF01-20-50	105 bis 125	0,47

Description	Part No.
MKS-SAMF02-80-1	107131

Type: with ball, with square seat, with elbow fitting Ø10mm, internal spring

Material: material mix



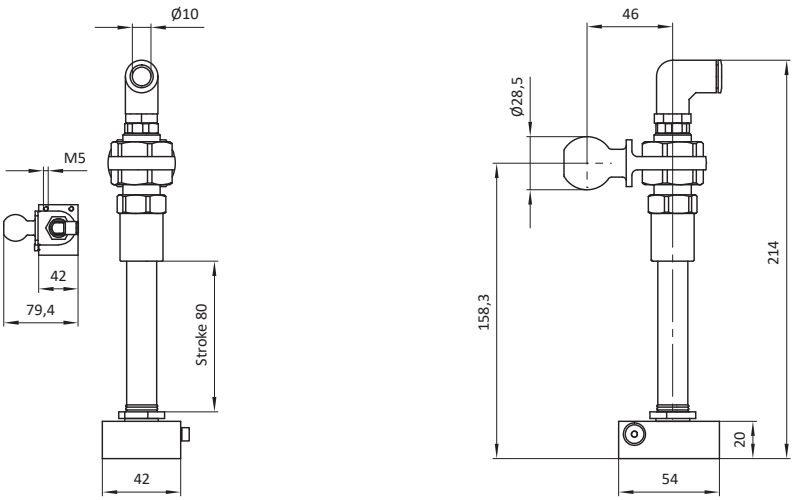

Part No.	Description	m [kg]
107131	MKS-SAMF02-80-1	0,21

Spring Plunger

Description	Part No.
MKS-SAMF02-20-80-X	see table

Type: with ball, with ejector, with square seat, internal spring

Material: material mix



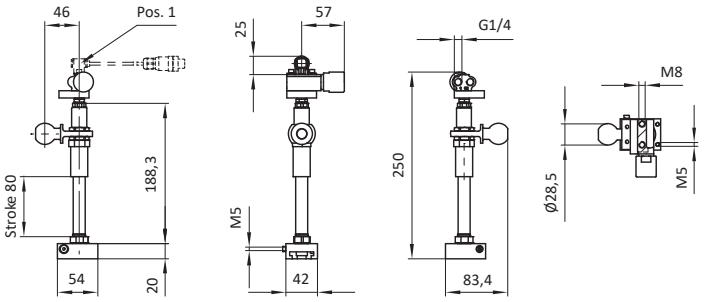

Part No.	Description	Vacuum switch [Pos. 1]	m [kg]
107679	MKS-SAMF02-20-80-2	yes	0,63
107680	MKS-SAMF02-20-80-3	no	0,63

Description	Part No.
MKS-SAMF02-20-50	16982

Type: with ball, with square seat

Material: material mix

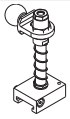

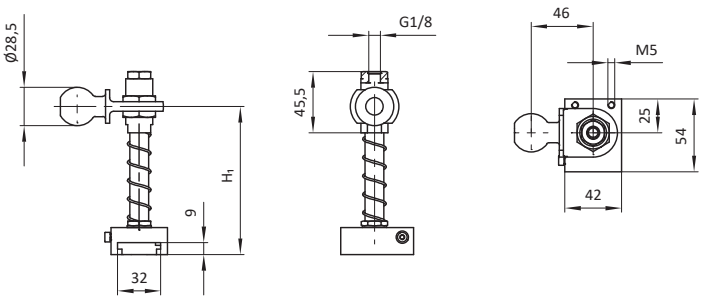

Part No.	Description	H_1 / spring deflection [mm]	m [kg]
16982	MKS-SAMF02-20-50	105 to 125	0,44

Description	Part No.
MKS-SAMF02-20-80-X	see table

Type: with ball, with square seat, with ejector

Material: material mix

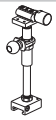

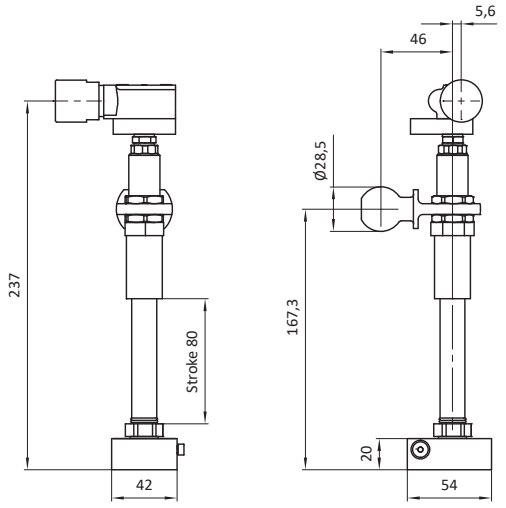

Part No.	Description	m [kg]	Non rotating
104702	MKS-SAMF02-20-80	0,63	yes
107533	MKS-SAMF02-20-80-1	0,63	no

Description	Part No.
MKS-SAMF04-20-70	104873

Type: with ball, with ejector, with bell jar suction cup

Material: material mix

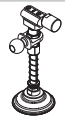

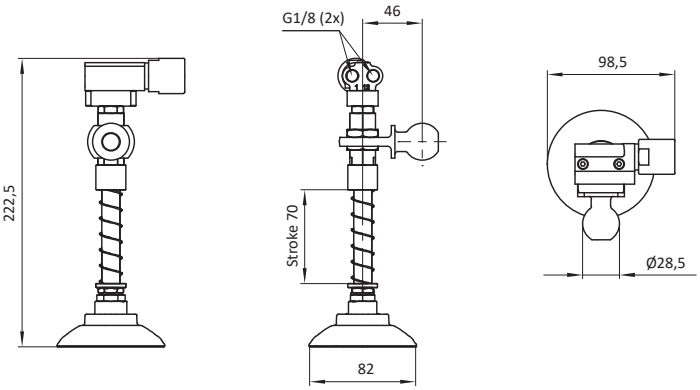

Part No.	Description	m [kg]
104873	MKS-SAMF04-20-70	0,50

Spring Plunger

Description	Part No.
MKS-SAR20-XX	see table

Type: with ball

Material: material mix

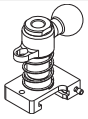

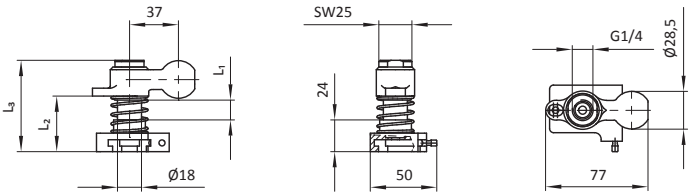

Part No.	Description	L_1 [mm]	L_2 [mm]	L_3 [mm]	m [kg]
14431	MKS-SAR20	15	42	69	0,22
15231	MKS-SAR20-25	25	52	79	0,26
15232	MKS-SAR20-50	50	77	104	0,32

Description	Part No.
MKS-FST06-150-004-S1	105963

Type: with rod journal

Material: material mix



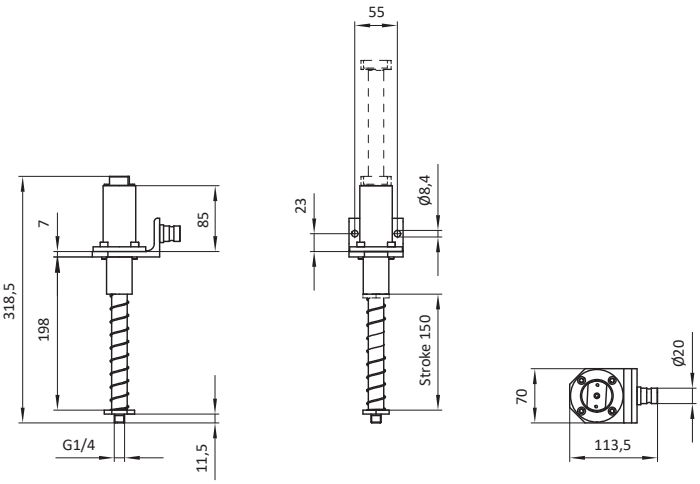

Part No.	Description	m [kg]
105963	MKS-FST06-150-004-S1	1,49

Description	Part No.
MKS-FST10-V-150	104291

Type: with rod journal, non rotating

Material: material mix

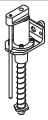

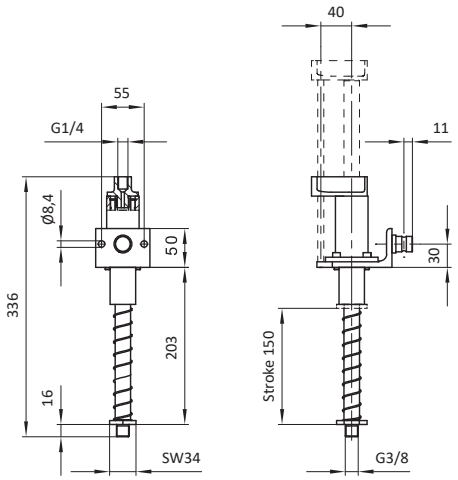

Part No.	Description	m [kg]
104291	MKS-FST10-V-150	1,93

Description	Part No.
MKS-FST20-45-SX	see table

Type: with ball, with elbow fitting Ø10mm

Material: material mix

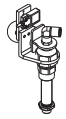

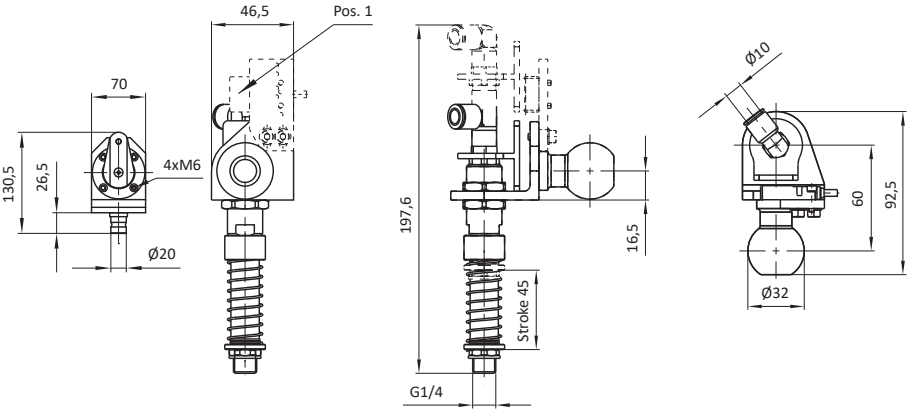

Part No.	Description	Non rotating	Sensor [Pos.1]	m [kg]
106496	MKS-FST20-45-S1	yes	yes	0,55
106618	MKS-FST20-45-S3	no	no	0,49

Spring Plunger Accessories

Description	Part No.
MKS-ZSAR20	14458

Type: accessories for spring plunger MKS-SAR20-X

Material: steel

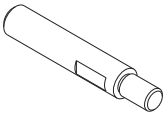

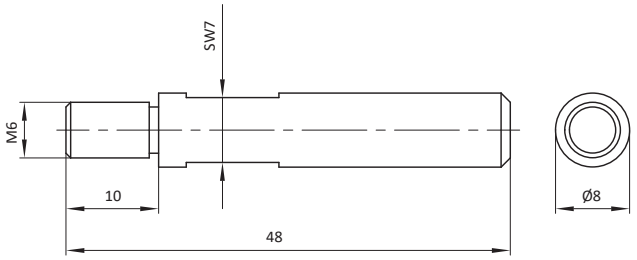

Part No.	Description	m [kg]
14458	MKS-ZSAR20	0,02

Description	Part No.
MKS-ZFSTX	see table

Type: accessories for spring plunger MKS-FST06-X, with ball mounting

Material: steel

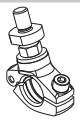

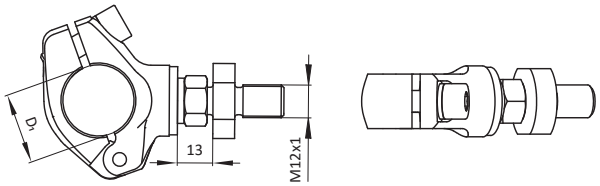

Part No.	Description	D_1 [mm]	m [kg]
106757	MKS-ZFST1	32	0,27
106793	MKS-ZFST3	28,5	0,29

Description	Part No.
MKS-AKU35	14993

Type: with ball, with flange 90°

Material: steel

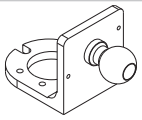

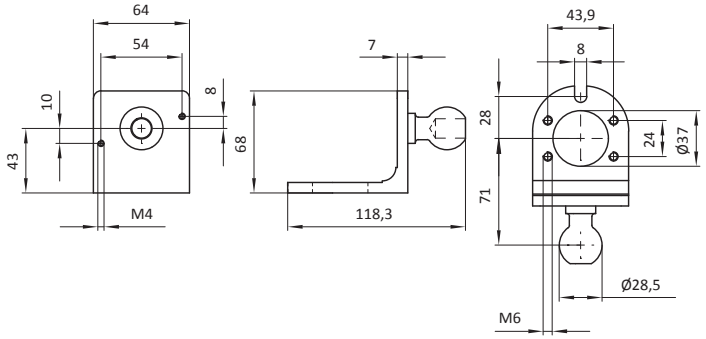

Part No.	Description	m [kg]
14993	MKS-AKU35	0,50

Description	Part No.
MKS-FST20-45-SX	see table

Type: mounting from MKS-FST20-45-SX, with ball, without spring plunger

Material: material mix

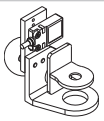

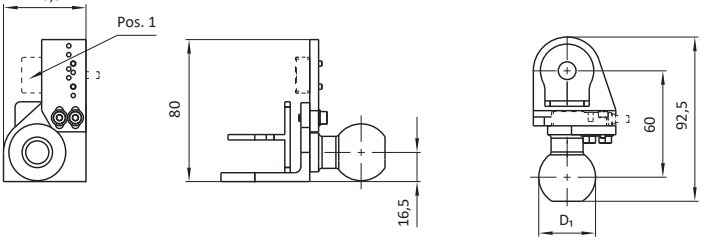

Part No.	Description	D_1 [mm]	Sensor [Pos.1]	m [kg]
106497	MKS-FST20-45-S2	32	yes [Balluff sensor]	0,33
106622	MKS-FST20-45-S4	32	no	0,32
106663	MKS-FST20-45-S5	32	yes [Turck sensor with connector M12]	0,33
107052	MKS-FST20-45-S6	28,5	yes [Balluff sensor]	0,28
108237	MKS-FST20-45-S8	32	yes [Turck sensor]	0,33

Spring Plunger Accessories

Description	Part No.
MKS-ZFSTX	see table

Type: mounting for spring plunger, ball

Material: steel

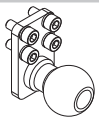

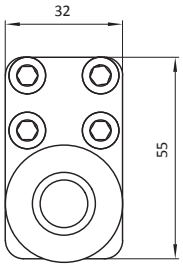

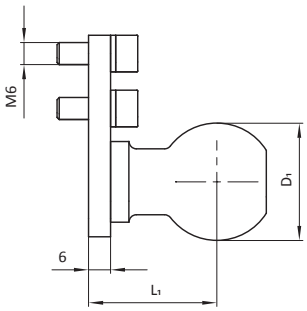

Part No.	Description	D_1 [mm]	L_1 [mm]	m [kg]
107709	MKS-ZFST4	32	35	0,25
107712	MKS-ZFST5	28,5	32	0,25

Description	Part No.
MKS-ZFST2	106758

Type: accessories for spring plunger, mounting for crash-detection

Material: aluminium

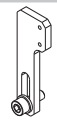

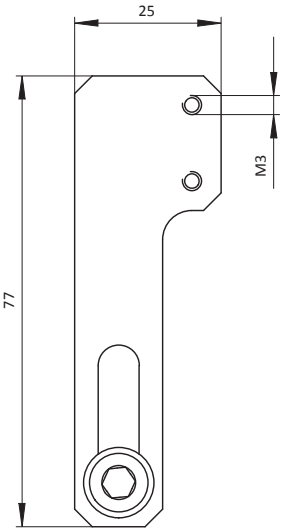

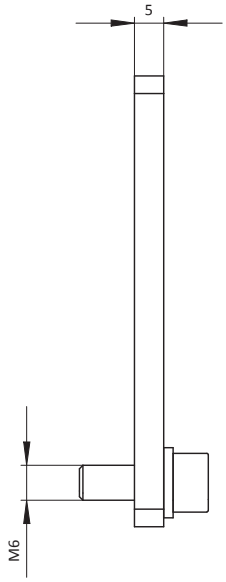

Part No.	Description	m [kg]
106758	MKS-ZFST2	0,03

Description	Part No.
MKS-ZSAR29	101216

Type: mounting for ejector, for suction cup seat

Material: aluminium

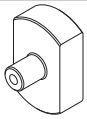

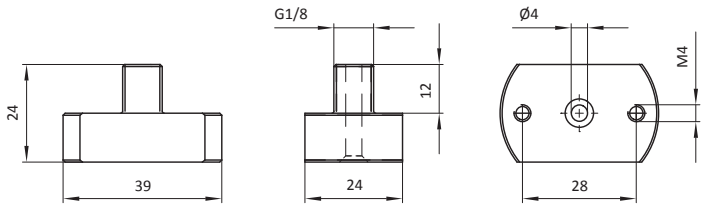

Part No.	Description	m [kg]
101216	MKS-ZSAR29	0,03

Spring Plunger Accessories

Description	Part No.
MKS-ZSEA-C-10-R	107770

Type: mounting for vacuum switch, right

Material: aluminium

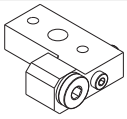

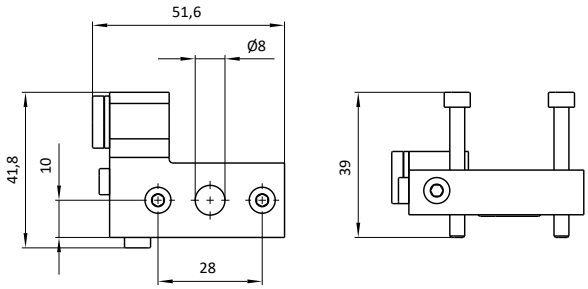

Part No.	Description	m [kg]
107770	MKS-ZSEA-C-10-R	0,05

Description	Part No.
MKS-ZSEA-C-10-L	107769

Type: mounting for vacuum switch, left

Material: aluminium

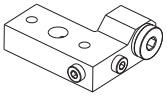

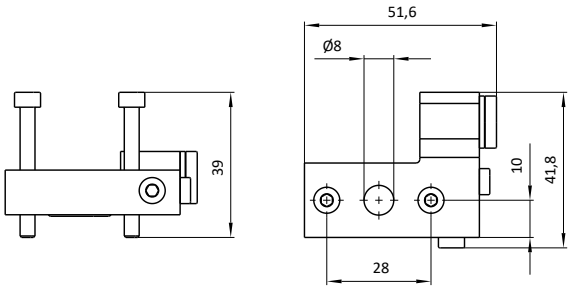

Part No.	Description	m [kg]
107769	MKS-ZSEA-C-10-L	0,05

Description	Part No.
MKS-SAR54-XX	see table

Type: suction cup seat with ball eye joint

Material: aluminium

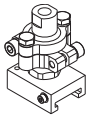

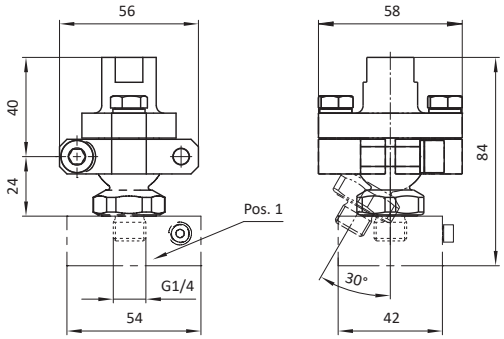

Part No.	Description	square seat [Pos. 1]	m [kg]
108204	MKS-SAR54	no	0,20
108205	MKS-SAR54-S1	yes	0,29

Description	Part No.
MKS-SAR18	13926

Type: square seat for suction cup

Material: aluminium

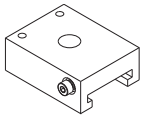

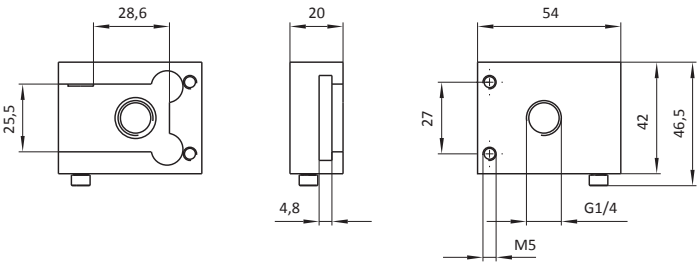

Part No.	Description	m [kg]
13926	MKS-SAR18	0,09

Suction Cup Mounting swivelling spring-loaded

Description	Part No.
MKS-SAR37-3-XXX-X	see table

Type: without suction cup, with spring plunger, with safety catch

Material: material mix

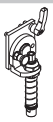

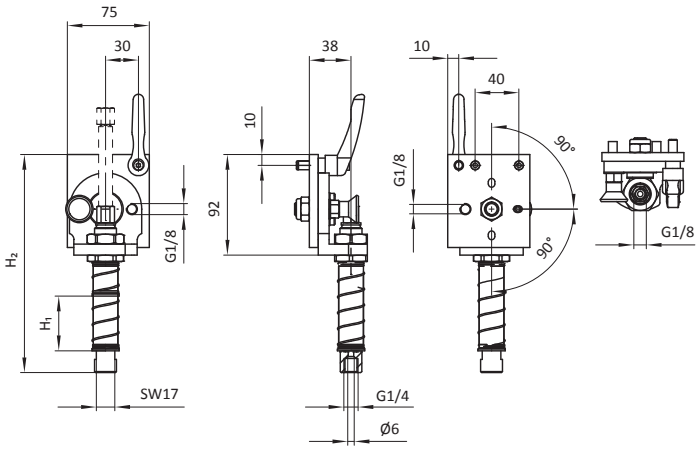

Part No.	Description	H_1 [mm]	H_2 [mm]	m [kg]
101085	MKS-SAR37-3-100	100	249,5	0,82
101084	MKS-SAR37-3-50-1	50	199,5	0,74

Description	Part No.
MKS-SAR37-6-BS60	106715

Type: with spring plunger, with suction cup, with straight fitting, with elbow fitting

Material: material mix



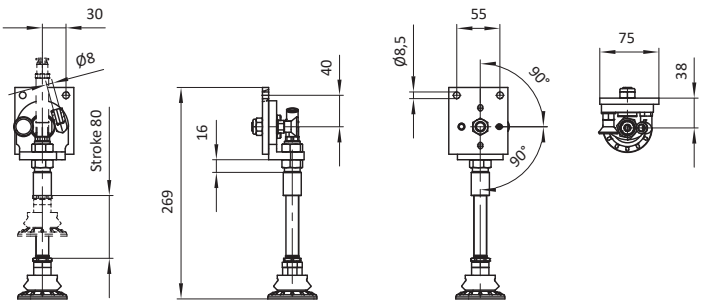

Part No.	Description	m [kg]	Port
106715	MKS-SAR37-6-BS60	0,95	Ø 8 mm (2x)

Description	Part No.
MKS-SAR37-2-BS60	17997

Type: with spring plunger, with suction cup, with straight fitting, with elbow fitting, with safety catch

Material: material mix



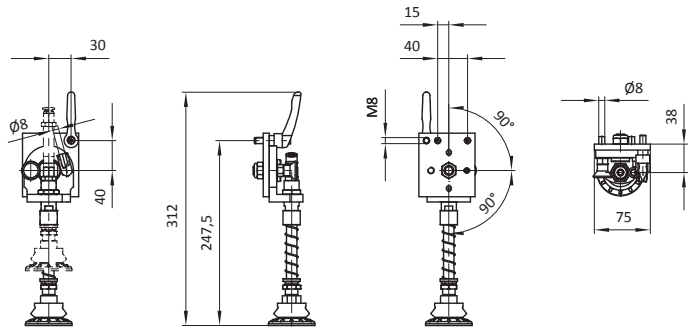

Part No.	Description	m [kg]	Port
17997	MKS-SAR37-2-BS60	0,75	Ø 8 mm (2x)

Description	Part No.
MKS-SAR37-3-X	see table

Type: with spring plunger, with safety catch

Material: material mix



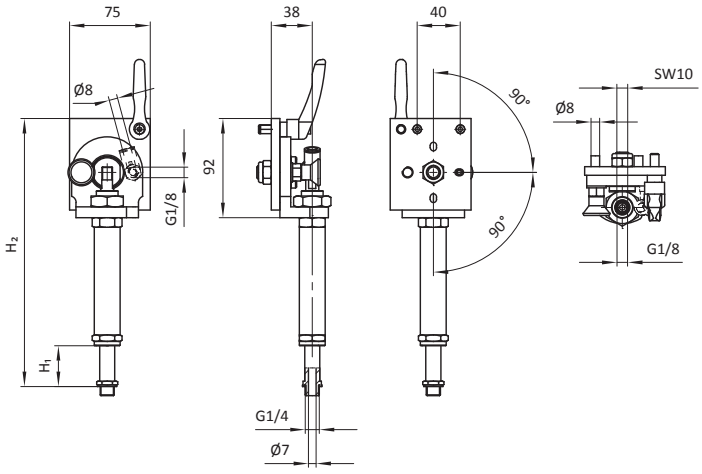

Part No.	Description	H_1/stroke [mm]	H_2 [mm]	m [kg]	Port
19968	MKS-SAR37-3	75	188,5	0,70	Ø 8 mm (2x)
100100	MKS-SAR37-3-50	50	158 - 188 (adjustable stroke)	0,63	-
19984	MKS-SAR37-3-V	50	293 - 314 (adjustable stroke)	0,97	-

Suction Cup Mounting swivelling

Description	Part No.
MKS-SAR37-5	102503

Type: basic version, with safety catch

Material: material mix



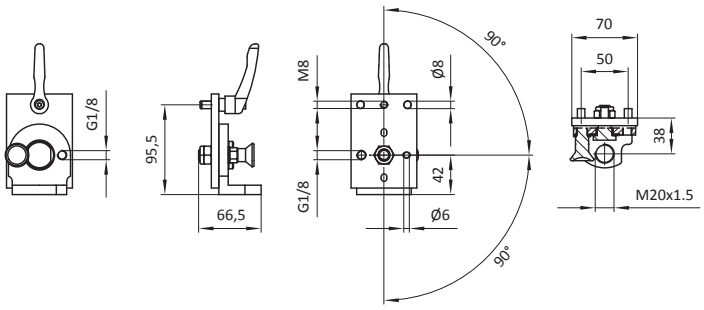

Part No.	Description	m [kg]
102503	MKS-SAR37-5	0,50

Description	Part No.
MKS-SAR37-X-X	see table

Type: without suction cup, with thread port

Material: material mix



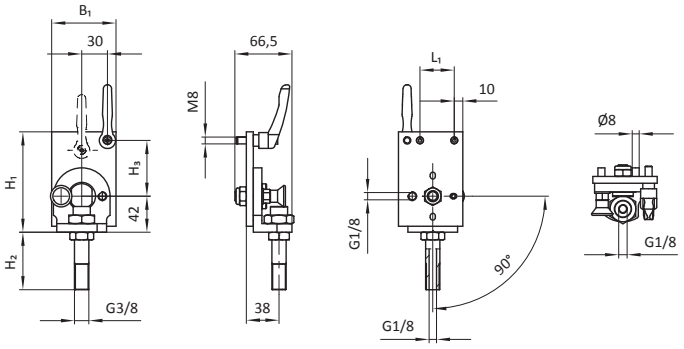

Part No.	Description	H_1 [mm]	H_2 [mm]	H_3 [mm]	B_1 [mm]	L_1 [mm]	m [kg]
19930	MKS-SAR37	100	20	53,5	70	50	0,52
101089	MKS-SAR37-4	117	20	65	75	40	0,52
100523	MKS-SAR37-4-V	117	67	65	75	40	0,58

Description	Part No.
MKS-SAR37-1-BS60	17996

Type: with suction cup, with safety catch

Material: material mix



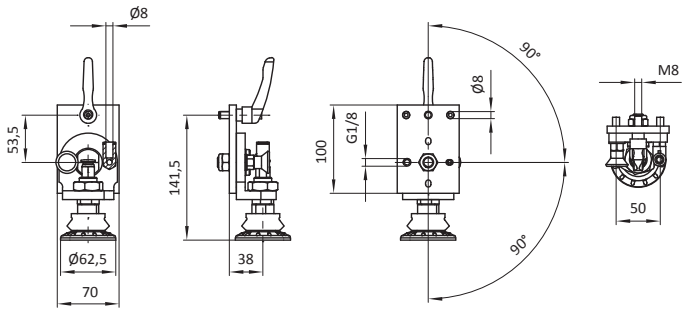

Part No.	Description	m [kg]	Port
17996	MKS-SAR37-1-BS60	0,65	Ø 8 mm (2x)

Suction Cup Seat with Ball/Rod Journal/Tube

Description	Part No.
MKS-AKUXX-X-XX	see table

Type: with ball, mounting with thread

Material: see table

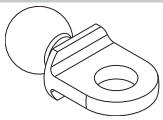

Description	Part No.
MKS-AWXX-XX	see table

Type: adapter with rod journal

Material: see table

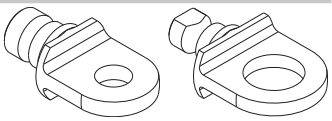

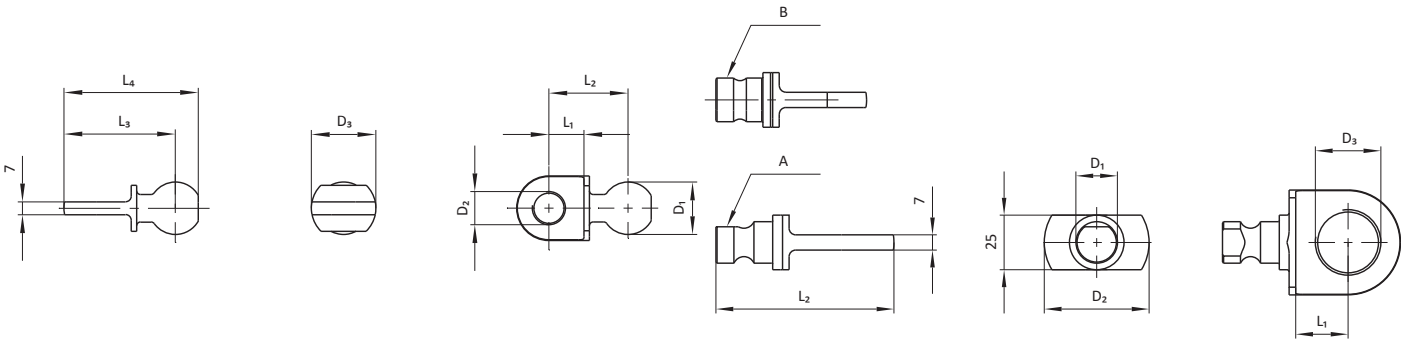

Part No.	Description	D_1 [mm]	D_2 [mm]	D_3 [mm]	L_1 [mm]	L_2 [mm]	L_3 [mm]	L_4 [mm]	m [kg]	Material
12688	MKS-AKU22-1	28,5	20,5	36	22	46	64	76,4	0,16	D
12879	MKS-AKU23	28,5	M18x1,5	35	19	43	60,5	73	0,15	D
13902	MKS-AKU28	32	M20x1,5	36	22	48	66	79,5	0,21	D
13903	MKS-AKU28-1	32	20,5	36	22	48	66	79,5	0,20	D
15207	MKS-AKU39	32	30,5	48	24	50	74	87,5	0,23	D
15575	MKS-AKU22	28,5	M20x1,5	36	22	46	64	76,4	0,16	D
15838	MKS-AKU39-2	28,5	30,5	48	24	48	72	84,4	0,19	D
19893	MKS-AKU22-2	36	M20x1,5	36	22	51	69	84	0,26	D
100769	MKS-AKU39-3	28,5	M30x1,5	48	24	48	72	84,4	0,19	D
100770	MKS-AKU39-4	32	M30x1,5	48	24	50	74	87,5	0,24	D
102577	MKS-AKU22-3	36	20,5	36	22	51	69	84	0,26	D
104103	MKS-AKU39-5	36	30,5	48	24	53	77	92	0,29	D
104104	MKS-AKU39-6	36	M30x1,5	48	24	53	77	92	0,30	D
104105	MKS-AKU95	28,5	18,5	36	22	46	64	76,4	0,16	D
104106	MKS-AKU95-1	28,5	M18x1	36	22	46	64	76,4	0,17	D
104107	MKS-AKU95-2	32	18,5	36	22	48	66	79,5	0,21	D
104108	MKS-AKU95-3	32	M18x1	36	22	48	66	79,5	0,21	D
104109	MKS-AKU95-4	36	18,5	36	22	51	69	84	0,26	D
104110	MKS-AKU95-5	36	M18x1	36	22	51	69	84	0,27	D
105381	MKS-AKU28-2	32	22	36	22	48	66	79,5	0,20	D
105756	MKS-AKU95-AL	28,5	18,5	36	22	46	64	76,4	0,06	A
105757	MKS-AKU95-1-AL	28,5	M18x1	36	22	46	64	76,4	0,06	A
105758	MKS-AKU95-2-AL	32	18,5	36	22	48	66	79,5	0,07	A
105759	MKS-AKU95-3-AL	32	M18x1	36	22	48	66	79,5	0,07	A
105760	MKS-AKU95-4-AL	36	18,5	36	22	51	69	84	0,09	A
105761	MKS-AKU95-5-AL	36	M18x1	36	22	51	69	84	0,09	A
105762	MKS-AKU22-1-AL	28,5	20,5	36	22	46	64	76,4	0,06	A
105763	MKS-AKU22-AL	28,5	M20x1,5	36	22	46	64	76,4	0,06	A
105764	MKS-AKU22-2-AL	36	M20x1,5	36	22	51	69	84	0,09	A
105765	MKS-AKU22-3-AL	36	20,5	36	22	51	69	84	0,09	A
105766	MKS-AKU39-AL	32	30,5	48	24	50	74	87,5	0,08	A
105767	MKS-AKU39-2-AL	28,5	30,5	48	24	48	72	84,4	0,07	A
105768	MKS-AKU39-3-AL	28,5	M30x1,5	48	24	48	72	84,4	0,07	A
105769	MKS-AKU39-4-AL	32	M30x1,5	48	24	50	74	87,5	0,08	A
105770	MKS-AKU39-5-AL	36	30,5	48	24	53	77	92	0,10	A
105771	MKS-AKU39-6-AL	36	M30x1,5	48	24	53	77	92	0,10	A
105772	MKS-AKU28-AL	32	M20x1,5	36	22	48	66	79,5	0,07	A
105773	MKS-AKU28-1-AL	32	20,5	36	22	48	66	79,5	0,07	A
105774	MKS-AKU28-2-AL	32	22	36	22	48	66	79,5	0,07	A

Part No.	Description	Rod journal type	D_1 [mm]	D_2 [mm]	D_3 [mm]	L_1 [mm]	L_2 [mm]	Material	m [kg]
12922	MKS-AW17	A	20	36	18,5	22	69	D	0,15
12923	MKS-AW18	A	20	36	20,5	22	69	D	0,14
17040	MKS-AW18-1	A	20	36	M20x1,5	22	69	D	0,15
100774	MKS-AW18-2	A	20	48	M20x1,6	24	77	D	0,17
100830	MKS-AW18-3	A	20	36	M16x1	22	69	D	0,15
12924	MKS-AW19	A	20	48	30,5	24	77	D	0,17
107557	MKS-AW19-AL	A	20	48	30,5	24	77	A	0,06
100688	MKS-AW30-1	B	19	36	M20x1,5	22	73,5	D	0,14
100689	MKS-AW30-2	B	19	48	M20x1,6	24	81,5	D	0,17
101901	MKS-AW38	B	19	36	20,5	22	73,5	D	0,14

Description	Part No.
MKS25-SAR49-XXX	see table

Type: tube with plate and internal thread

Material: steel

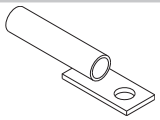

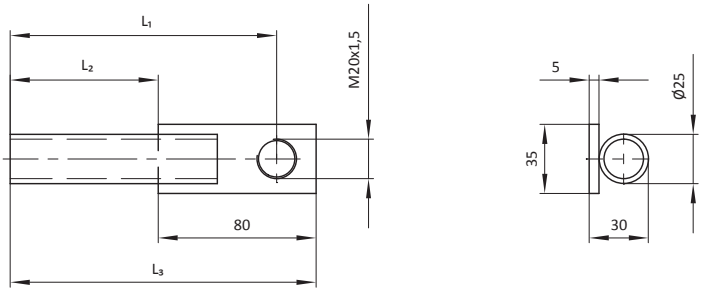

Part No.	Description	L_1 [mm]	L_2 [mm]	L_3 [mm]	m [kg]
104439	MKS25-SAR49-200	200	140	220	0,13
104440	MKS25-SAR49-300	300	240	320	0,15
104441	MKS25-SAR49-400	400	340	420	0,17

Material
A → aluminium
D → steel

Distribution Block

Description	Part No.
MKS-VTB02	15198

Type: distribution block, for pneumatic

Material: aluminium

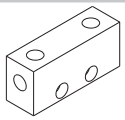

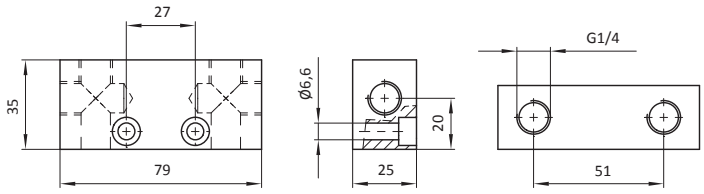

Part No.	Description	m [kg]
15198	MKS-VTB02	0,15

Description	Part No.
MKS-VTB01-X	see table

Type: distribution block, for pneumatic

Material: see table

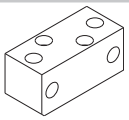

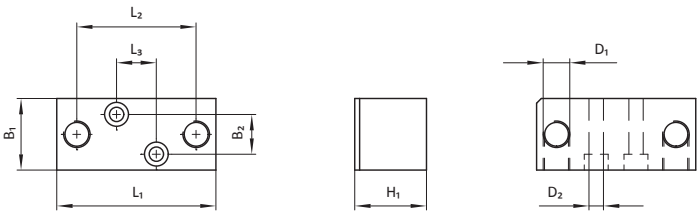

Part No.	Description	D_1 [mm]	D_2 [mm]	H_1 [mm]	B_1 [mm]	B_2 [mm]	L_1 [mm]	L_2 [mm]	L_3 [mm]	m [kg]	Material
11839	MKS-VTB01	G3/8	9	45	45	25	100	75	25	0,48	A
18064	MKS-VTB01-1	G1/4	6,6	40	40	20	90	65	25	1,07	J
18065	MKS-VTB01-2	G3/8	9	45	45	25	100	75	25	1,44	J
18066	MKS-VTB01-3	G1/2	9	50	50	30	110	75	25	1,89	J
18067	MKS-VTB01-4	G3/4	9	60	60	25	120	75	25	2,71	J

Description	Part No.
MKS60-VTB0X-X	see table

Type: distribution block, for pneumatic, with tube clamping

Material: aluminium

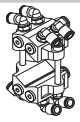

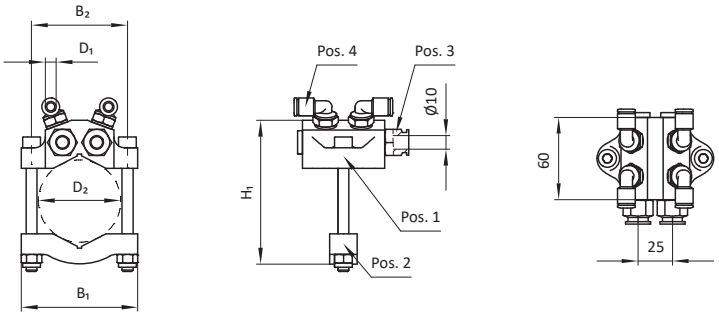

Part No.	Description	D_1 [mm]	D_2 [mm]	H_1 [mm]	B_1 [mm]	B_2 [mm]	m [kg]	Number of distribution blocks [Pos. 1]	Number of counter mountings [Pos. 2]	Number of inputs(straight fitting) [Pos. 3]	Number of outputs (elbow fitting) [Pos. 4]
100288	MKS60-VTB03-1	8	60	105	85	70	0,57	1	1	Ø 10 mm (2x)	Ø 8 mm (4x)
104153	MKS60-VTB03-2	10	60	105	101	86	0,62	1	1	Ø 10 mm (1x)	Ø 10 mm (4x)
100289	MKS60-VTB04-1	8	60	118	85	70	0,90	2	0	Ø 10 mm (4x)	Ø 8 mm (8x)
100609	MKS60-VTB05-1	10	60	118	85	70	0,89	2	0	Ø 10 mm (2x)	Ø 10 mm (8x)
100610	MKS60-VTB06-1	10	60	105	85	70	0,68	1	1	Ø 10 mm (1x)	Ø 10 mm (4x)
106617	MKS60-VTB06-2	10	60	105	85	70	0,39	1	1	Ø 10 mm (1x)	Ø 10 mm (4x)
103494	MKS76-VTB03-1	10	76	123	101	86	0,66	1	1	Ø 10 mm (2x)	Ø 10 mm (4x)
103503	MKS76-VTB03-2	10	76	123	101	86	0,61	1	1	Ø 10 mm (1x)	Ø 10 mm (4x)

Material
A → aluminium
J → brass

6. Seat for Double Plate Detection, Sensors and Connections

Index


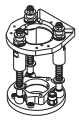

Seat for Double Plate Detection 174



Component Query for Seat for Double Plate Detection 175

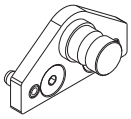
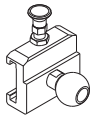
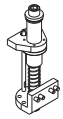

Mounting for Seat for Double Plate Detection 176

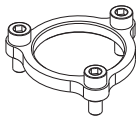
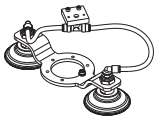
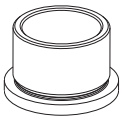

Accessories for Seat for Double Plate Detection 179

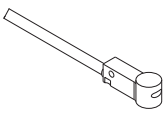
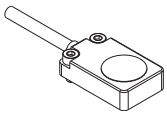
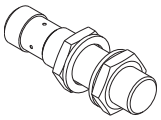

Inductive Sensor 180

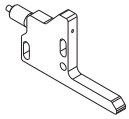
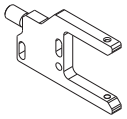
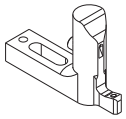

Light Barrier 186

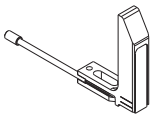
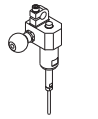
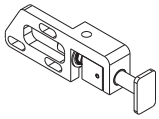

Component Query 188

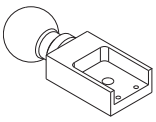
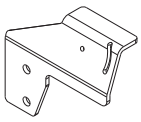
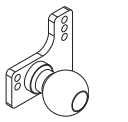

Sensor Mounting 189

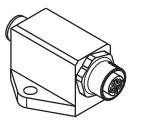
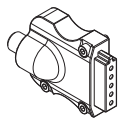
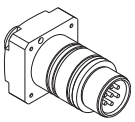

Connector 197

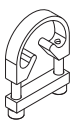

Cable Mounting 198

Seat for Double Plate Detection

Description	Part No.
MKS-ADK14	104724

Type: with spiral spring, with flat suction cup

Material: Plates: aluminium
Webbing: polyester
Flat suction cup: NBR



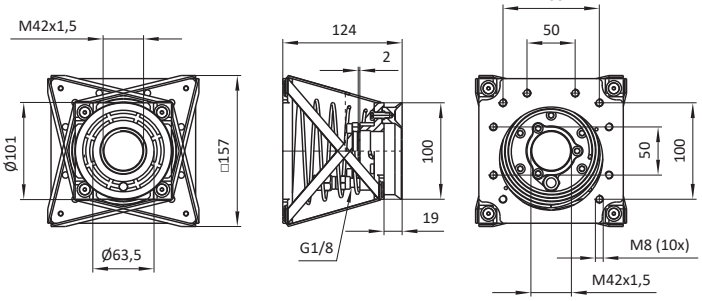

Part No.	Description	m [kg]	Port
104724	MKS-ADK14	0,90	Ø 10 mm (straight)

Description	Part No.
MKS-ADK12-XX	see table

Type: with spring plunger

Material: Plates: aluminium
Spring plunger: steel

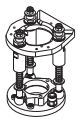

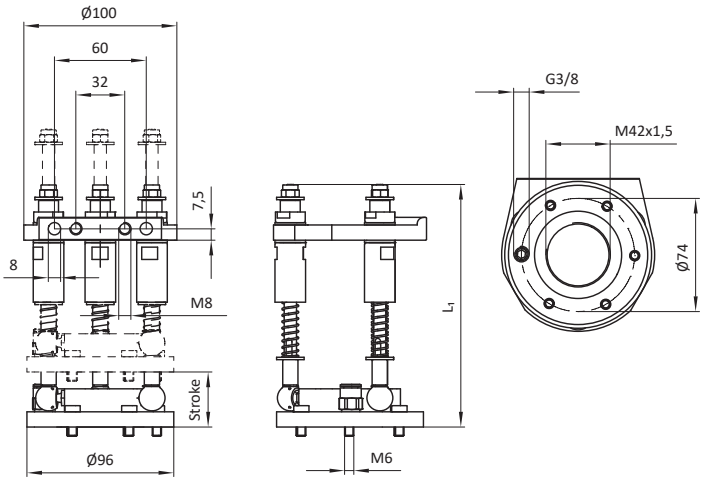

Part No.	Description	H_1 [mm]	Stroke [mm]	m [kg]	Port
102462	MKS-ADK12	158,6	36	0,89	Ø 8 mm (straight)
103912	MKS-ADK12-80	202,6	80	0,94	Ø 8 mm (straight)

Component Query for Seat for Double Plate Detection

Description	Part No.
MKS-ABF03-80-45-30	104391

Type: for ADK12, with flat suction cup, with M12 Sensor

Material: material mix

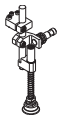

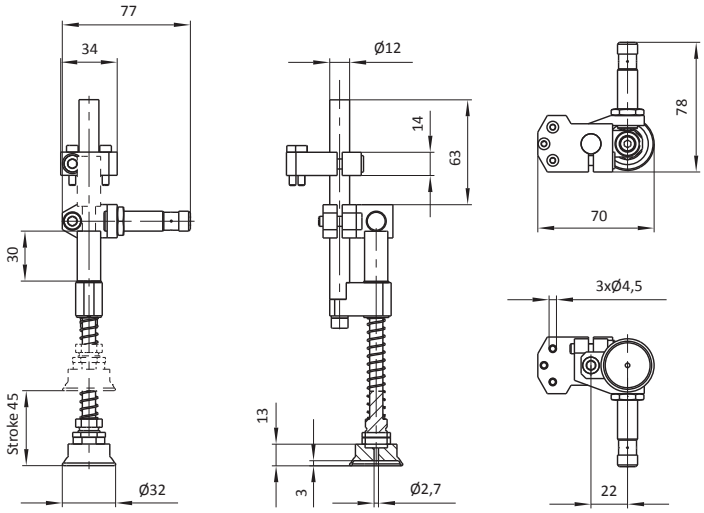

Part No.	Description	m [kg]
104391	MKS-ABF03-80-45-30	0,33

Mounting for Seat for Double Plate Detection

Description	Part No.
MKS-AKU93-X	see table

Type: mounting for ADK12/14, with ball

Material: steel

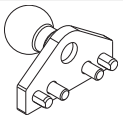

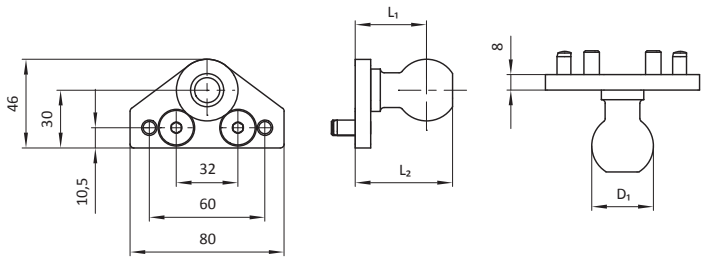

Part No.	Description	D_1 [mm]	L_1 [mm]	L_2 [mm]	m [kg]
103927	MKS-AKU93	28,5	34	46,4	0,28
104048	MKS-AKU93-1	32	37	50,5	0,33
104049	MKS-AKU93-2	36	37	52	0,38

Description	Part No.
MKS-AW42-2	104047

Type: mounting for ADK12/14, with rod journal

Material: steel

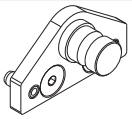

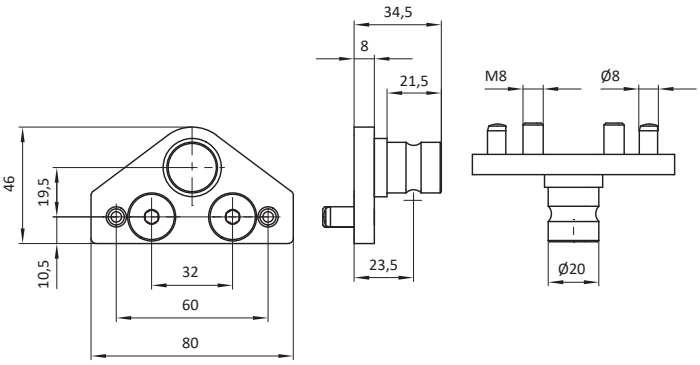

Part No.	Description	m [kg]
104047	MKS-AW42-2	0,30

Description	Part No.
MKS-AW42-1	103984

Type: mounting for ADK12/14, with recessed rod journal

Material: steel

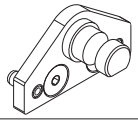

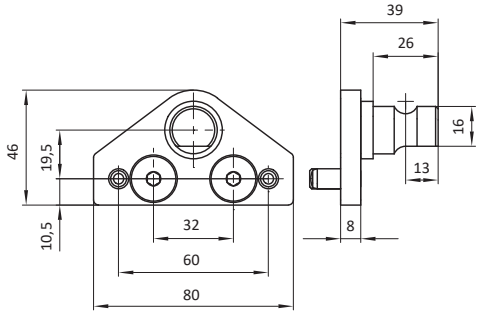

Part No.	Description	m [kg]
103984	MKS-AW42-1	0,24

Description	Part No.
MKS-KPPXX-L	see table

Type: for locking bolt, loose side, for ADK

Material: material mix

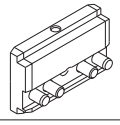

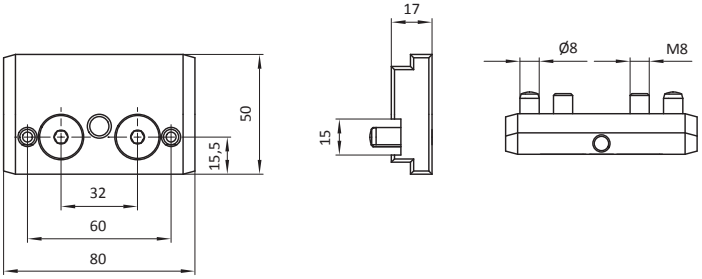

Part No.	Description	m [kg]
102630	MKS-KPP29-L	0,16

Mounting for Seat for Double Plate Detection

Description	Part No.
MKS-KPP47-XX-F	see table

Type: with locking bolt, fixed side, with ball

Material: material mix

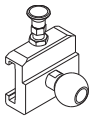

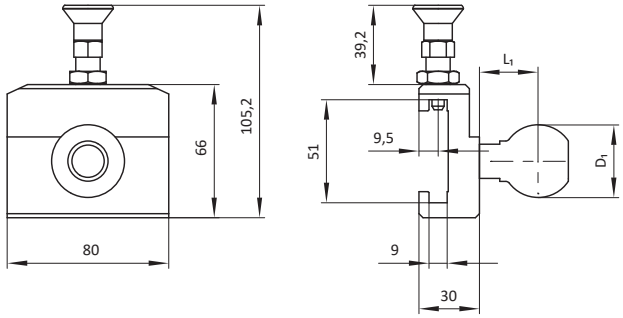

Part No.	Description	D_1 [mm]	L_1 [mm]	m [kg]
104067	MKS-KPP47-28-F	28,5	24	0,40
106060	MKS-KPP47-36-F	36	29	0,50

Description	Part No.
MKS-KPP29-XX-F	see table

Type: with locking bolt, fixed side, with ball

Material: material mix

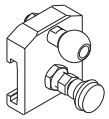

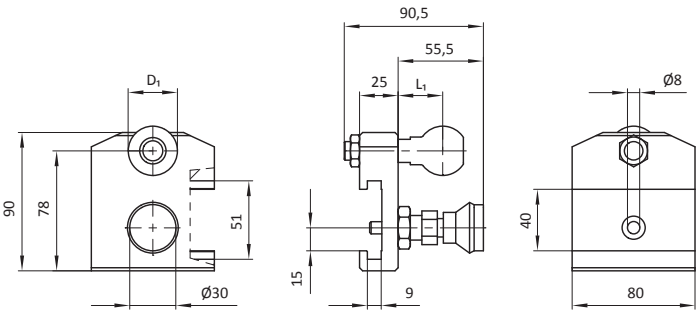

Part No.	Description	D_1 [mm]	L_1 [mm]	m [kg]
104042	MKS-KPP29-28-F	28,5	24	0,51
103316	MKS-KPP29-32-F	32	29	0,60
104044	MKS-KPP29-36-F	36	29	0,69

Description	Part No.
MKS-KPP47-SX-F	see table

Type: with locking bolt, fixed side, with mounting holes

Material: material mix

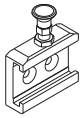

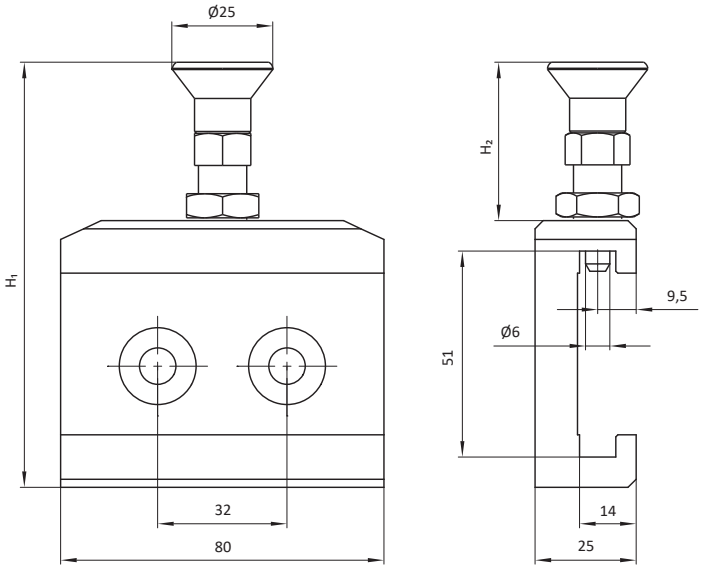

Part No.	Description	H_1 [mm]	H_2 [mm]	m [kg]
104212	MKS-KPP47-S1-F	105,2	39,2	0,24
107522	MKS-KPP47-S2-F	94,7	28,7	0,23

Description	Part No.
MKS-KPP47-WXX-F	see table

Type: with locking bolt, fixed side, with rod journal

Material: material mix

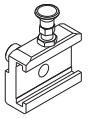

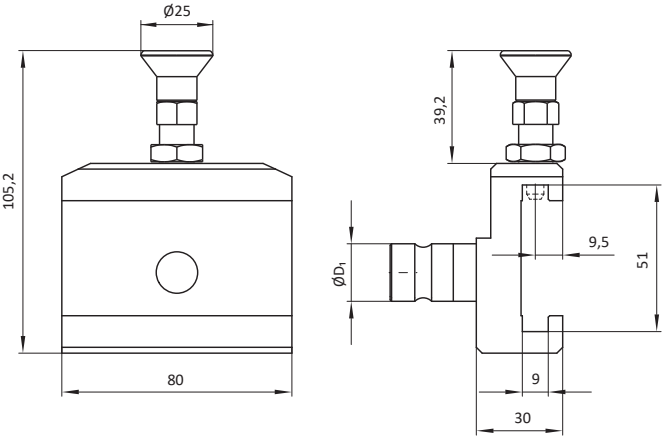

Part No.	Description	D_1 [mm]	m [kg]
104120	MKS-KPP47-W20-F	20	0,40
108013	MKS-KPP47-W19-F	19	0,40

Mounting for Seat for Double Plate Detection

Description	Part No.
MKS-KPP29-XX-F-AL	see table

Type: with locking bolt, fixed side, with ball

Material: material mix

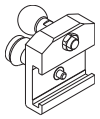

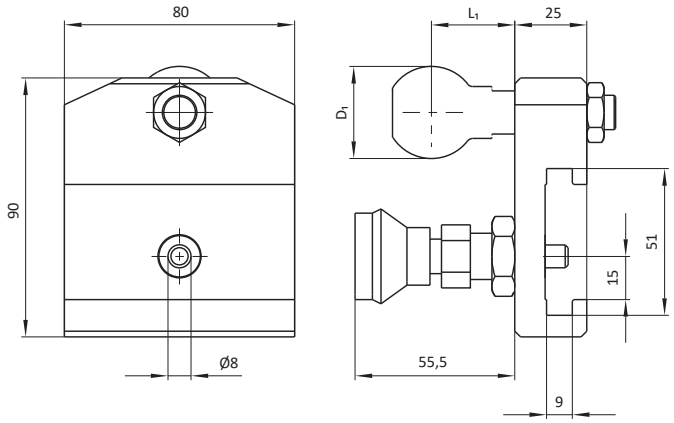

Part No.	Description	D_1 [mm]	L_1 [mm]	m [kg]
105789	MKS-KPP29-28-F-AL	28,5	26,6	0,60
105788	MKS-KPP29-32-F-AL	32	29,6	0,60
105790	MKS-KPP29-36-F-AL	36	35,6	0,60

Description	Part No.
MKS-KPP29-WXX-F-X	see table

Type: with locking bolt, fixed side, with rod journal

Material: material mix

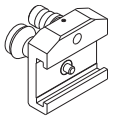

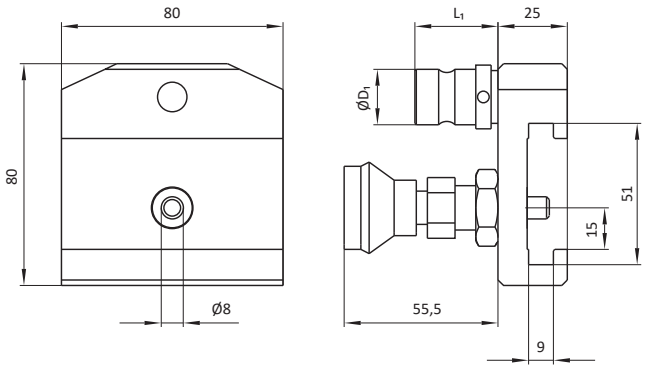

Part No.	Description	D_1 [mm]	L_1 [mm]	m [kg]
101961	MKS-KPP29-W19-F	19	34	0,60
101963	MKS-KPP29-W20-F	20	30	0,60
106897	MKS-KPP29-W20-F-1	20	36	0,60

Description	Part No.
MKS-FST19-XXX	see table

Type: spring plunger for ADK12/14

Material: material mix

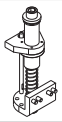

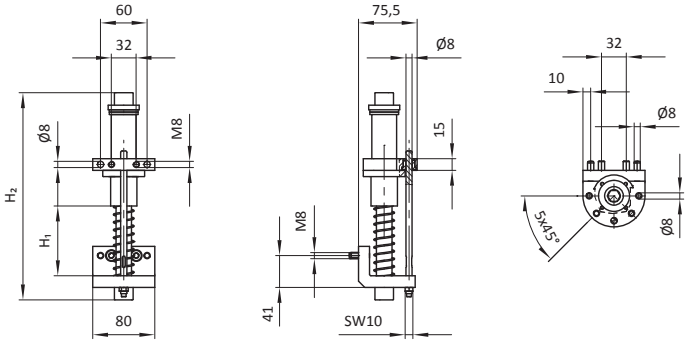

Part No.	Description	H_1 / stroke [mm]	H_2 [mm]	m [kg]
105558	MKS-FST19-90	90	267	1,30
105559	MKS-FST19-120	120	312	1,42
105560	MKS-FST19-150	150	342	1,46
105668	MKS-FST19-180	180	385	1,59

Accessories for Seat for Double Plate Detection

Description	Part No.
MKS-SHA07-X	see table

Type: clamping ring for double plate sensor

Material: steel

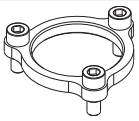

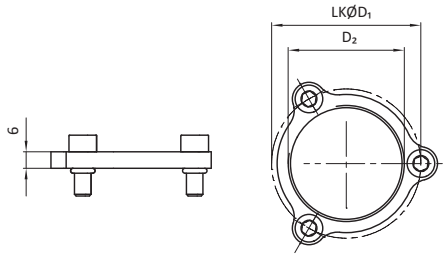

Part No.	Description	D_1 [mm]	D_2 [mm]	m [kg]
102709	MKS-SHA07	54	M42x1,5	0,06
104419	MKS-SHA07-1	54	M36x1,5	0,06
105627	MKS-SHA07-2	68	M54x0,75	0,08

Description	Part No.
MKS-SHA08	102710

Type: clamping ring for double plate sensor, with additional single sensor mounting

Material: steel

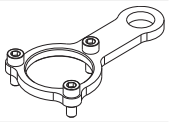

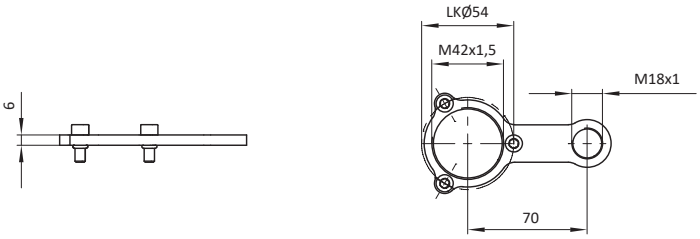

Part No.	Description	m [kg]
102710	MKS-SHA08	0,10

Description	Part No.
MKS-SHA08-1	105170

Type: clamping ring for double plate sensor, with additional double sensor mounting

Material: steel

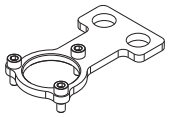

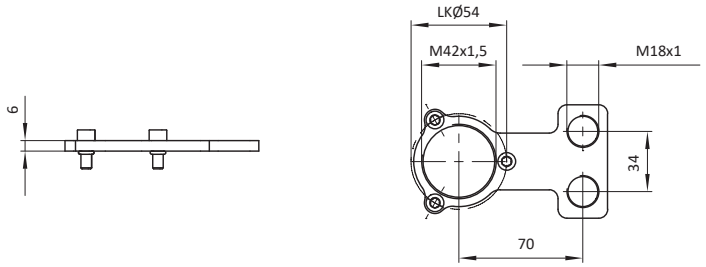

Part No.	Description	m [kg]
105170	MKS-SHA08-1	0,20

Description	Part No.
MKS-SHA09	102729

Type: clamping ring for double plate sensor, with additional clamp fixed

Material: material mix

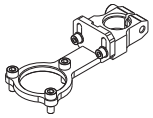

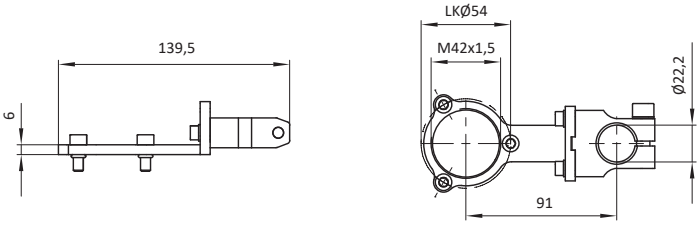

Part No.	Description	m [kg]
102729	MKS-SHA09	0,30

Description	Part No.
MKS-SAR51	106862

Type: suction cup seat for ADK12/14, with bell jar suction cups, with ejector mounting

Material: material mix



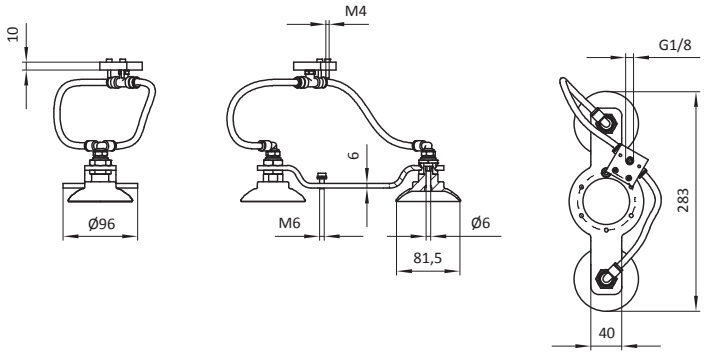

Part No.	Description
106862	MKS-SAR51

Description	Part No.
MKS-RN04-MXXx1-5	see table

Type: reducer for sensor mounting

Material: aluminium



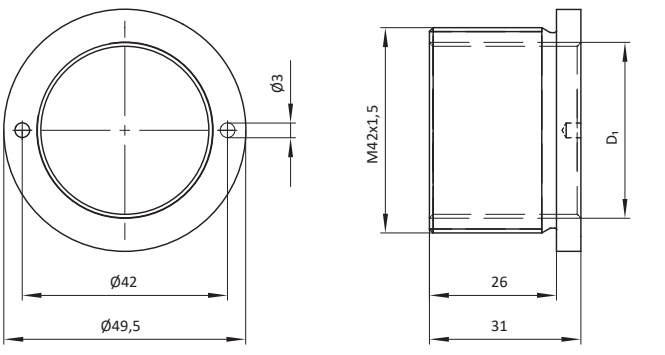

Part No.	Description	D_1 [mm]	m [kg]
103193	MKS-RN04-M30x1-5	M30x1,5	0,06
103191	MKS-RN04-M36x1-5	M36x1,5	0,04

Technical changes and errors are subject to change without notice!
www.springer.group
Document Date: CW 12.2025

Inductive Sensor

Description	Part No.
MKS-IDS19-2000	101877

Type: none flush mounting possible, PNP / NO

Material: material mix

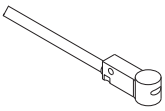

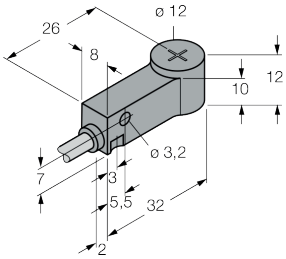

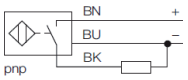

Part No.	Description	Cable length [mm]	Switching distance Sn [mm]
101877	MKS-IDS19-2000	2000	3,5

Description	Part No.
MKS-IDS19-S4-2000	105047

Type: none flush mounting possible, PNP / NO

Material: material mix

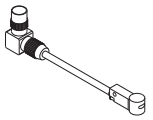

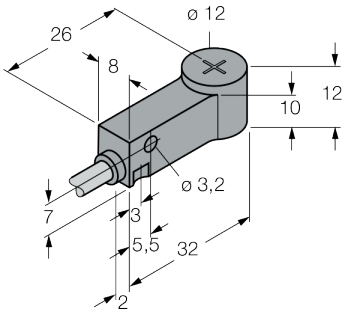

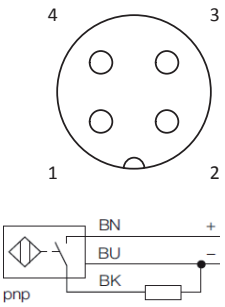

Part No.	Description	Switching distance Sn [mm]	Cable length [mm]	Connector assignment				Connector
				Pin 1	Pin 2	Pin 3	Pin 4	
105047	MKS-IDS19-S4-2000	3,5	2000	brown (+24V)		blue (ground)	black (jumper wire)	M12x1-angle-connector

Inductive Sensor

Description	Part No.
MKS-IDS19-XX-XXX	see table

Type: none flush mounting possible, PNP / NO

Material: material mix

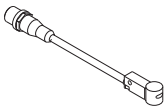

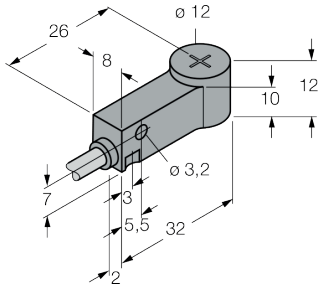

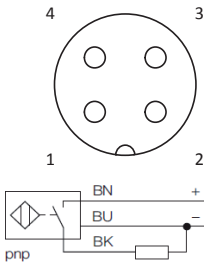

Part No.	Description	Switching distance Sn [mm]	Cable length [mm]	Connector assignment Pin 1	Pin 2	Pin 3	Pin 4	Connector
101878	MKS-IDS19-M12	3,5	300	brown (+24V)		blue (ground)	black (jumper wire)	M12x1
103331	MKS-IDS19-S1-750	4	750	brown (+24V)		blue (ground)	black (jumper wire)	M12x1
107621	MKS-IDS19-S1-900	4	900	brown (+24V)		blue (ground)	black (jumper wire)	M12x1

Description	Part No.
MKS-IDS19-SX-XXX	see table

Type: none flush mounting possible, PNP / NO

Material: material mix

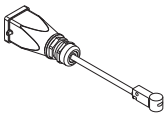

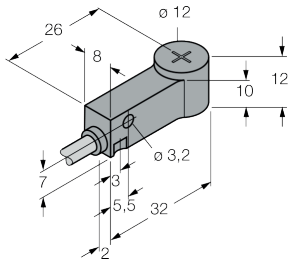

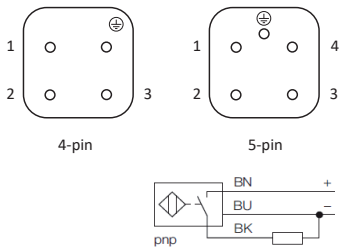

Part No.	Description	Switching distance Sn [mm]	Cable length [mm]	Connector assignment Pin 1	Pin 2	Pin 3	Pin 4	Pin 5	Connector
102230	MKS-IDS19-S-600	3,5	600	brown (+24V)		blue (ground)	black (jumper wire)		5-pin
102231	MKS-IDS19-S-750	3,5	750	brown (+24V)		blue (ground)	black (jumper wire)		5-pin
102232	MKS-IDS19-S-900	3,5	900	brown (+24V)		blue (ground)	black (jumper wire)		5-pin
102233	MKS-IDS19-S-1200	3,5	1200	brown (+24V)		blue (ground)	black (jumper wire)		5-pin
102234	MKS-IDS19-S-2000	3,5	2000	brown (+24V)		blue (ground)	black (jumper wire)		5-pin
102466	MKS-IDS19-S2-650	4	650	brown (+24V)	blue (ground)	black (jumper wire)			4-pin
102707	MKS-IDS19-1-S2-900	4	900	brown (+24V)	blue (ground)	black (jumper wire)			4-pin
107560	MKS-IDS19-S2-1200	4	1200	brown (+24V)	blue (ground)	black (jumper wire)			4-pin

Inductive Sensor

Description	Part No.
MKS-IDS02-SX-XXX-X	see table

Type: flush mounting possible, PNP / NO, status-LED

Material: material mix

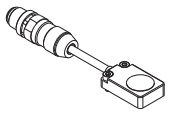

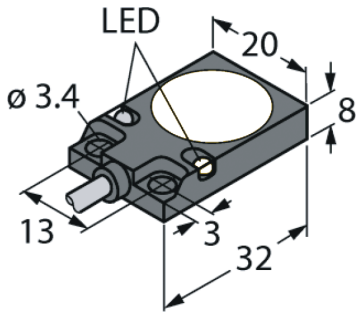

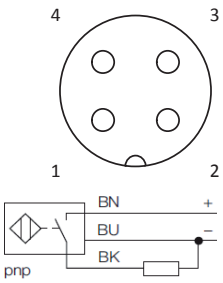

Part No.	Description	Switching distance Sn [mm]	Cable length [mm]	Wire-/ connector assignment Pin 1	Pin 2	Pin 3	Pin 4	Connector	Protective hose over cable	Suppression of cuttings
101022	MKS-IDS02-S1-300	7	300	brown (+24V)	-	blue (ground)	black (jumper wire)	M12x1 (4-pin)	yes	no
102546	MKS-IDS02-S1-750	7	750	brown (+24V)	-	blue (ground)	black (jumper wire)	M12x1 (4-pin)	yes	no
107622	MKS-IDS02-S1-900	7	900	brown (+24V)	-	blue (ground)	black (jumper wire)	M12x1 (4-pin)	no	no
104677	MKS-IDS02-S1-300-1	7	300	brown (+24V)	-	blue (ground)	black (jumper wire)	M12x1 (4-pin)	no	no
105383	MKS-IDS02-S1-1200-1	7	1200	brown (+24V)	-	blue (ground)	black (jumper wire)	M12x1 (4-pin)	no	no
105327	MKS-IDS02-S1-300-AL	5	300	brown (+24V)	-	blue (ground)	black (jumper wire)	M12x1 (4-pin)	yes	no
105949	MKS-IDS02-S1-600-AL	5	600	brown (+24V)	-	blue (ground)	black (jumper wire)	M12x1 (4-pin)	yes	no
105334	MKS-IDS02-S3-1000	7	1000	brown (+24V)	-	blue (ground)	black (jumper wire)	without connector	no	yes
104197	MKS-IDS02-S3-300-M12	7	300	brown (+24V)	-	blue (ground)	black (jumper wire)	M12x1 (4-pin)		yes

Description	Part No.
MKS-IDS02-X-XXX-X	see table

Type: flush mounting possible, PNP / NO, status-LED

Material: material mix

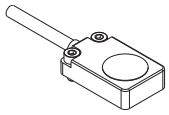

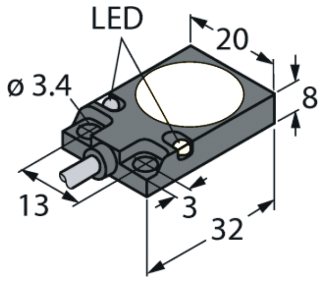

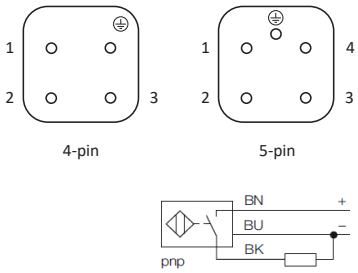

Part No.	Description	Switching distance Sn [mm]	Cable length [mm]	Connector assignment Pin 1	Pin 2	Pin 3	Pin 4	Pin 5	Connector
100937	MKS-IDS02-S-300	7	300	brown (+24V)		blue (ground)	black (jumper wire)		5-pin
15686	MKS-IDS02-S-600	7	600	brown (+24V)		blue (ground)	black (jumper wire)		5-pin
17842	MKS-IDS02-S-750	7	750	brown (+24V)		blue (ground)	black (jumper wire)		5-pin
17461	MKS-IDS02-S-900	7	900	brown (+24V)		blue (ground)	black (jumper wire)		5-pin
17462	MKS-IDS02-S-1200	7	1200	brown (+24V)		blue (ground)	black (jumper wire)		5-pin
17463	MKS-IDS02-S-2000	7	2000	brown (+24V)		blue (ground)	black (jumper wire)		5-pin
102054	MKS-IDS02-S-750-AL	5	750	brown (+24V)		blue (ground)	black (jumper wire)		5-pin
107559	MKS-IDS02-S2-1200-2	7	1200	brown (+24V)	blue (ground)	black (jumper wire)			4-pin
101228	MKS-IDS02-S2-650	7	650	brown (+24V)	black (jumper wire)	blue (ground)			4-pin
102464	MKS-IDS02-1-S2-650	7	650						4-pin
101850	MKS-IDS02-1-S2-750	7	750						4-pin
102639	MKS-IDS02-1-S2-900	7	900						4-pin

Inductive Sensor

Description	Part No.
MKS-IDS02-X-XXXX-XX	see table

Type: flush mounting possible, status-LED

Material: material mix

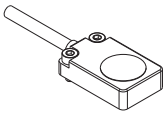

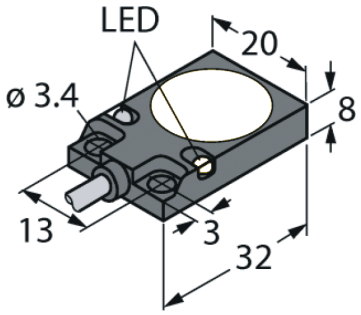

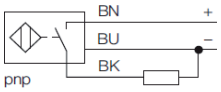

Electrical diagram A

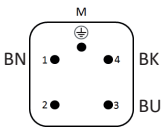

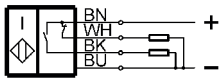

Electrical diagram B

Part No.	Description	Switching distance Sn [mm]	Cable length [mm]	Wire assignment brown	blue	black	white	Electrical diagram	Connector (MKS-EST07)	connector
15685	MKS-IDS02-600	7	600	+24V	ground	jumper wire	-	A	no	PNP / NO
11592	MKS-IDS02-900	7	900	+24V	ground	jumper wire	-	A	no	PNP / NO
11593	MKS-IDS02-1200	7	1200	+24V	ground	jumper wire	-	A	no	PNP / NO
14481	MKS-IDS02-2000	7	2000	+24V	ground	jumper wire	-	A	no	PNP / NO
107365	MKS-IDS02-2000-AL	5	2000	+24V	ground	jumper wire	-	A	no	PNP / NO
103156	MKS-IDS02-S-600-AL	5	600	+24V	ground	jumper wire	-	A	yes (5-pin)	PNP / NO
103157	MKS-IDS02-S-900-AL	5	900	+24V	ground	jumper wire	-	A	yes (5-pin)	PNP / NO
103158	MKS-IDS02-S-1200-AL	5	1200	+24V	ground	jumper wire	-	A	yes (5-pin)	PNP / NO
102064	MKS-IDS02-1-2000	7	2000	+24V	ground	jumper wire / NO	jumper wire / NC	B	no	PNP / NO/NC

Description	Part No.
MKS-IDS08	15667

Type: PNP / NO, M12x1-connector

Material: composite

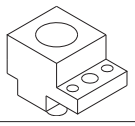

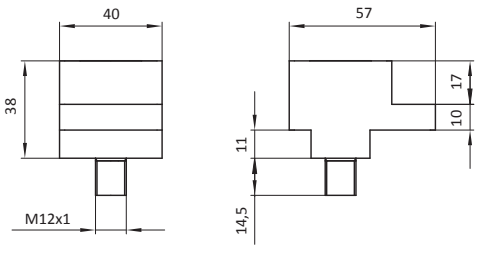

Part No.	Description	m [kg]	Switching distance Sn [mm]
15667	MKS-IDS08	0,12	22

Description	Part No.
MKS-IDS23	103793

Type: flush mounting possible, PNP / NO, status-LED, M12-connector

Material: brass

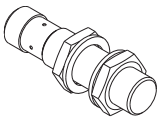

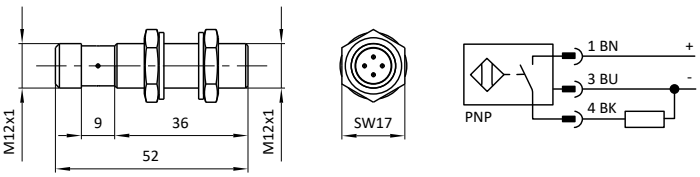

Part No.	Description	m [kg]	Switching distance Sn [mm]
103793	MKS-IDS23	0,03	4

Inductive Sensor

Description	Part No.
MKS-IDS10-XXXX	see table

Type: PNP / NO, status-LED

Material: material mix

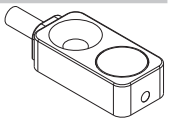

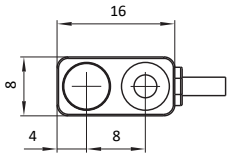

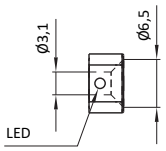

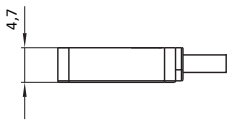

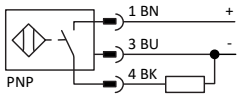

Part No.	Description	Switching distance Sn [mm]	Cable length [mm]	Wire assignment brown	blue	black
100938	MKS-IDS10-300	2	300	+24V	ground	jumper wire
19993	MKS-IDS10-900	2	900	+24V	ground	jumper wire
19994	MKS-IDS10-1200	2	1200	+24V	ground	jumper wire
102261	MKS-IDS10-2000	2	2000	+24V	ground	jumper wire

Description	Part No.
MKS-IDSXX-XXX	see table

Type: flush mounting possible, PNP / NO, status-LED, M12x1-connector

Material: material mix

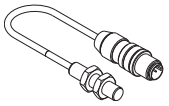

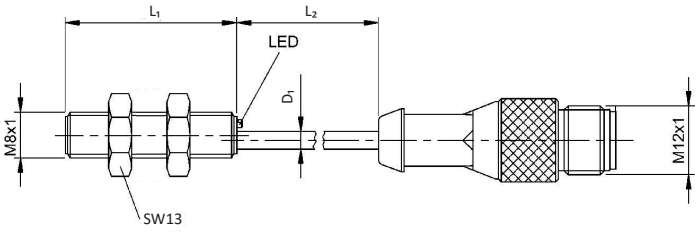

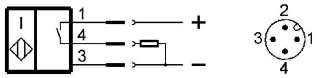

Part No.	Description	Switching distance Sn [mm]	L1 [mm]	L2 [mm]	D1 [mm]
18011	MKS-IDS05	1,5	30	500	3,1
105657	MKS-IDS26-300	3	35	300	3,5

Description	Part No.
MKS-IDS04	14468

Type: flush mounting possible, PNP / NO, status-LED, M12x1-connector

Material: material mix

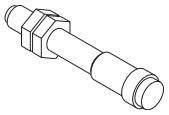

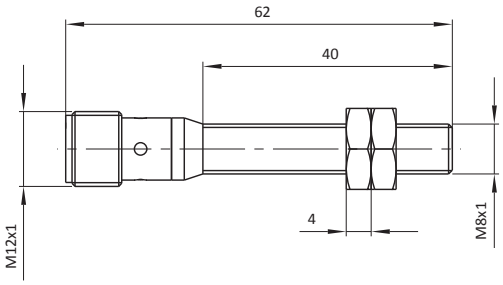



Part No.	Description	m [kg]	Switching distance Sn [mm]
14468	MKS-IDS04	0,03	2

Description	Part No.
MKS-IDS04-1	103794

Type: flush mounting possible, PNP / NO, status-LED, M8x1-connector

Material: material mix

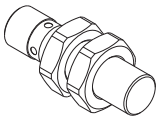

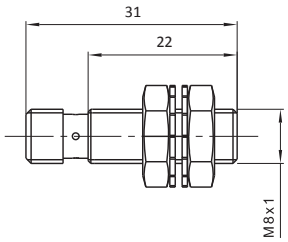

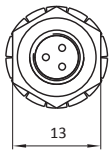

Part No.	Description	m [kg]	Switching distance Sn [mm]
103794	MKS-IDS04-1	0,02	2

Description	Part No.
MKS-IDS25-300-S3	106675

Type: magnetic field sensor, PNP / NO, M12x1-connector

Material: material mix





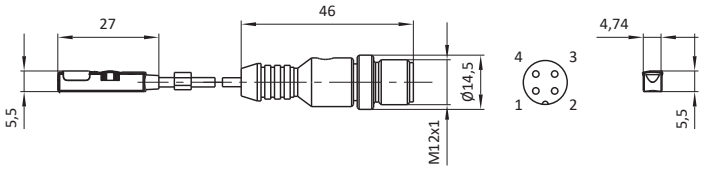

Part No.	Description	Cable length [mm]	Connector assignment Pin 1	Pin 2	Pin 3	Pin 4
106675	MKS-IDS25-300-S3	300	+24V		ground	jumper wire

Inductive Sensor

Description	Part No.
MKS-IDS0X-X	see table

Type: PNP / NO, status-LED, M12x1-connector

Material: stainless steel

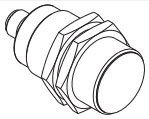

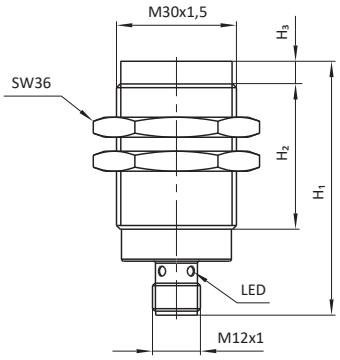

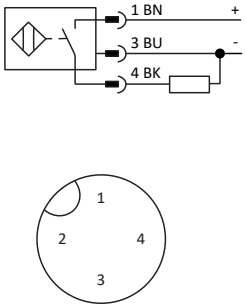

Part No.	Description	H_1 [mm]	H_2 [mm]	H_3 [mm]	Switching distance Sn [mm]	flush mounting possible	m [kg]
11625	MKS-IDS01	63,5	42	0	20	yes	0,15
100652	MKS-IDS01-1	63,5	42	0	16	yes	0,15
18196	MKS-IDS09	72	35	15	17,6	no	0,18

Description	Part No.
MKS-IDS21-S1-300	102006

Type: for swivel drive, for groove, PNP / NO, M12-connector

Material: material mix

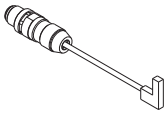

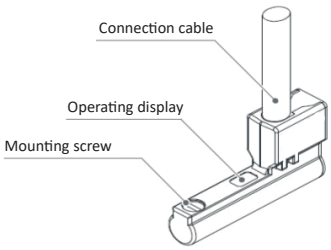

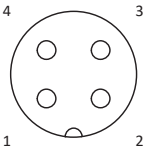

Part No.	Description	Cable length [mm]	Connector assignment Pin 1	Pin 2	Pin 3	Pin 4	m [kg]
102006	MKS-IDS21-S1-300	300	+24V	-	ground	jumper wire	0,03

Description	Part No.
MKS-IDS25-300-S1	105640

Type: magnetic field sensor, PNP / NO, M12x1-connector

Material: material mix





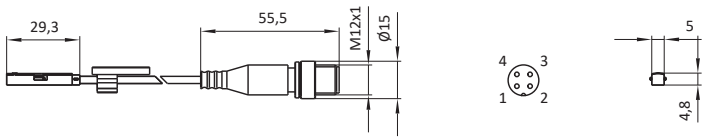

Part No.	Description	Cable length [mm]	Connector assignment Pin 1	Pin 2	Pin 3	Pin 4	m [kg]
105640	MKS-IDS25-300-S1	300	brown (+24V)		blue (ground)	black (jumper wire)	0,02

Description	Part No.
MKS-IDS25-300-S2	105680

Type: magnetic field sensor, long distance detection, PNP / NO, M12x1-connector

Material: material mix





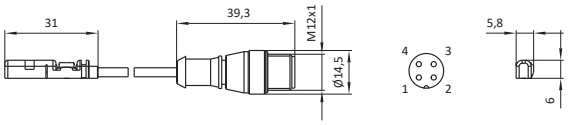

Part No.	Description	Cable length [mm]	Connector assignment Pin 1	Pin 2	Pin 3	Pin 4	m [kg]
105680	MKS-IDS25-300-S2	300	brown (+24V)		blue (ground)	black (jumper wire)	0,02

Light Barrier

Description	Part No.
MKS-OPS0X-XXX-XX	see table

Type: angle light barrier with status-LED, red light

Material: steel

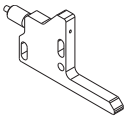

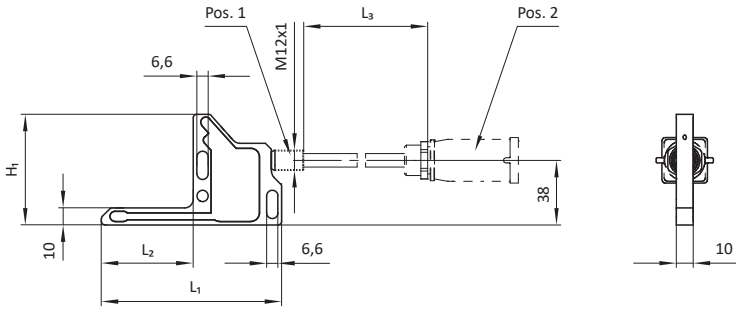

Part No.	Description	H_1 [mm]	L_1 [mm]	L_2 [mm]	L_3 (cable length) [mm]	Connector M12x1 [Pos. 1]	Connector [Pos. 2]	Connector	m [kg]
100836	MKS-OPS01-RT-LED-500-ST-M12x1	65	106	54	500	yes		PNP / NO	0,15
17174	MKS-OPS01-RT-LED	65	106	54		yes		PNP / NO	0,15
17178	MKS-OPS01-RT-LED-1200-ST	65	106	54	1200		MKS-EST07	PNP / NO	0,20
17176	MKS-OPS01-RT-LED-2000	65	106	54	2000			PNP / NO	0,20
100343	MKS-OPS01-RT-LED-750-ST	65	106	54	750		MKS-EST07	PNP / NO	0,30
17177	MKS-OPS01-RT-LED-900-ST	65	106	54	900		MKS-EST07	PNP / NO	0,20
102148	MKS-OPS01-RT-NPN-LED	65	106	54		yes		NPN / NO	0,15
19705	MKS-OPS01-RT-NPN-NC-LED	65	106	54		yes		NPN / NC	0,15
17179	MKS-OPS02-RT-LED	46	83	31		yes		PNP / NO	0,11
17183	MKS-OPS02-RT-LED-1200-ST	65	117	65	1200		MKS-EST07	PNP / NO	0,20
17182	MKS-OPS02-RT-LED-900-ST	65	117	65	900		MKS-EST07	PNP / NO	0,20
17184	MKS-OPS03-RT-LED	65	117	65		yes		PNP / NO	0,16
17188	MKS-OPS03-RT-LED-1200-ST	65	117	65	1200		MKS-EST07	PNP / NO	0,21
17186	MKS-OPS03-RT-LED-2000	65	117	65	2000			PNP / NO	0,21
17187	MKS-OPS03-RT-LED-900-ST	65	117	65	900		MKS-EST07	PNP / NO	0,31

Description	Part No.
MKS-OPS10-XX-XX	see table

Type: fork light barrier, red-light

Material: steel

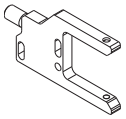

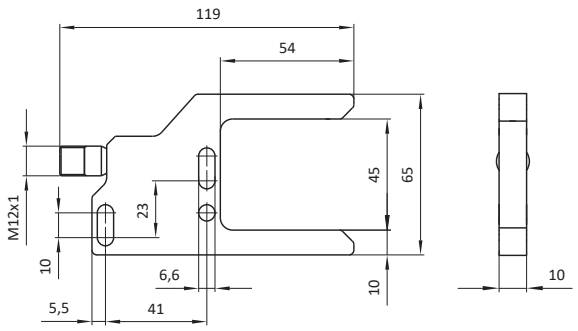

Part No.	Description	Status-LED	Connector
100303	MKS-OPS10-RT-LED	yes	PNP / NO
100572	MKS-OPS10-01-RT	no	PNP / NO/NC switchable

Description	Part No.
MKS-OPS14-RT-LED	100574

Type: fork light barrier, red-light

Material: steel

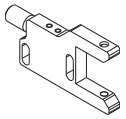

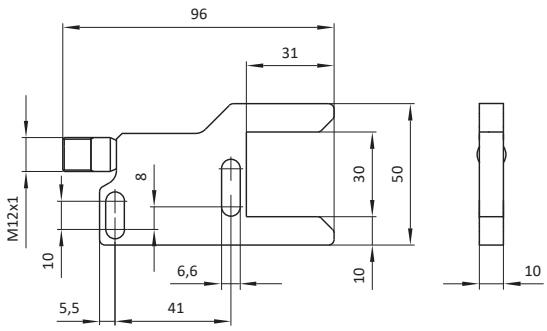

Part No.	Description	Status-LED	Connector
100574	MKS-OPS14-RT-LED	yes	PNP / NO

Light Barrier

Description	Part No.
MKS-OPS05-XX-LED	see table

Type: light barrier, PNP / NO

Material: steel

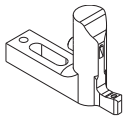

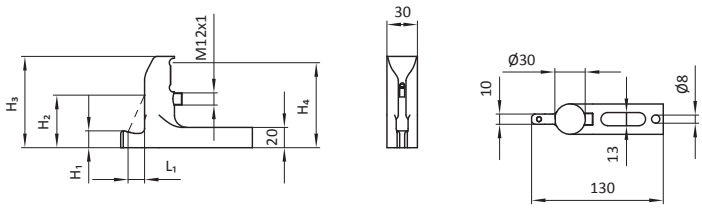

Part No.	Description	H_1 [mm]	H_2 [mm]	H_3 [mm]	H_4 [mm]	L_1 [mm]	m [kg]
100546	MKS-OPS05-90-LED	16,5	50	90	85	16,1	0,73
100560	MKS-OPS05-120-LED	16,5	63,3	120	113	15,6	0,84
100561	MKS-OPS05-150-LED	16,5	82,2	150	127	16	0,99
100562	MKS-OPS05-180-LED	15,7	102,6	180	154	17	1,09
100563	MKS-OPS05-250-LED	15,7	102,6	250	154	17	1,51
100564	MKS-OPS05-300-LED	15,7	102,6	300	154	17	1,78

Component Query

Description	Part No.
SK-IDS-01-10-XXX-01	see table

Type: position adapter with inductive sensor; for steel, aluminium and stainless steel; IO-Link or standard I/O; status LED

Material: steel

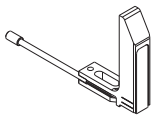

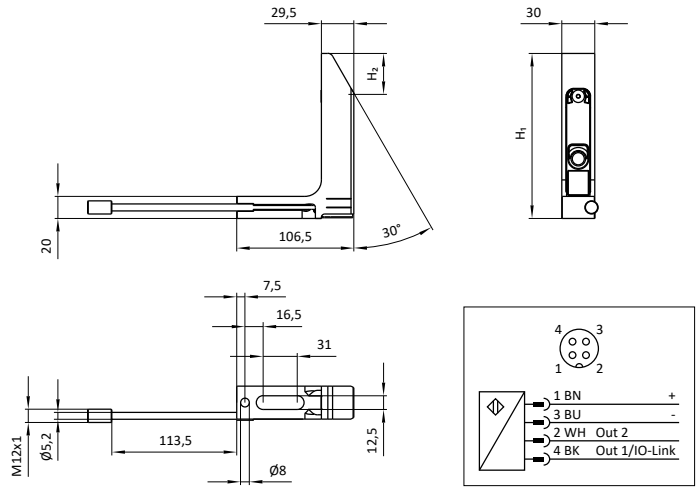

Part No.	Description	H_1 [mm]	H_2 [mm]	m [kg]	Switching distance Sn [mm]
108683	SK-IDS-01-10-090-01	90	20,3	0,53	10
108684	SK-IDS-01-10-120-01	120	37,3	0,67	10
108685	SK-IDS-01-10-150-01	150	37,3	0,72	10
108686	SK-IDS-01-10-180-01	180	37,3	0,93	10
108687	SK-IDS-01-10-250-01	250	37,3	1,41	10
108688	SK-IDS-01-10-300-01	300	37,3	1,76	10

Description	Part No.
MKS-IDS31-XXX	see table

Type: position adapter with rocker switch and inductive sensor, status LED

Material: steel

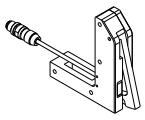

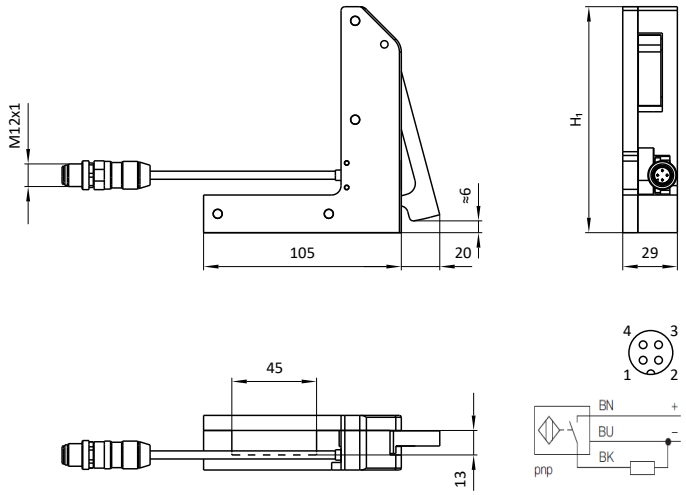

Part No.	Description	H_1 [mm]	m [kg]
108285	MKS-IDS31-90	90	0,75
108279	MKS-IDS31-120	120	0,94
108280	MKS-IDS31-150	150	1,05
108281	MKS-IDS31-180	180	1,17
108282	MKS-IDS31-250	250	1,43
108283	MKS-IDS31-300	300	1,62

Component Query

Description	Part No.
MKS-ABF06-30-S1	107627

Type: with ball, internal spring-loaded

Material: material mix

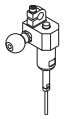

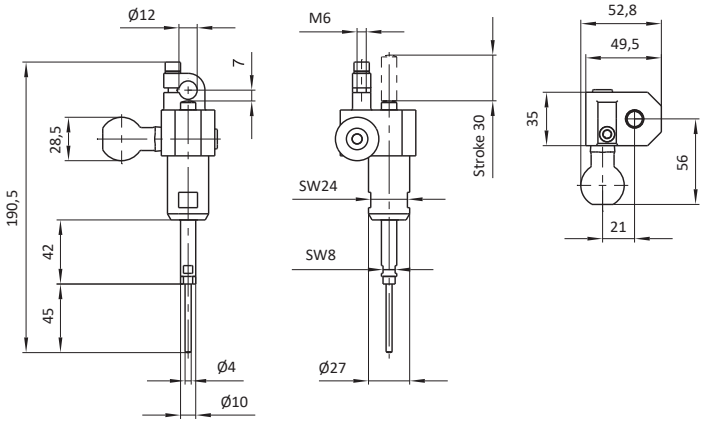

Part No.	Description	m [kg]
107627	MKS-ABF06-30-S1	0,41

Description	Part No.
MKS-ABF01-1	106577

Type: for jaw gripper

Material: material mix

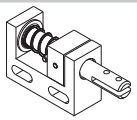

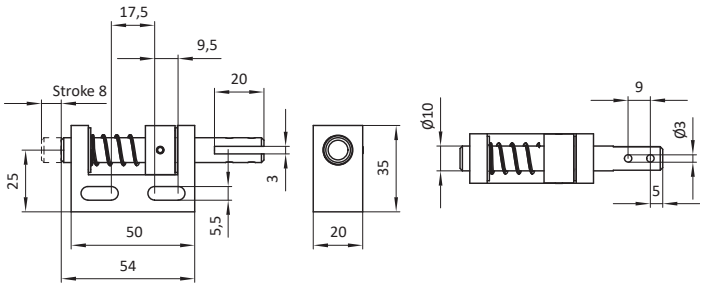

Part No.	Description	H_1 [mm]	m [kg]
106577	MKS-ABF01-1	8	0,12

Description	Part No.
MKS-ABF02-R	102509

Type: for jaw gripper, for component query, right

Material: material mix

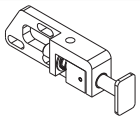

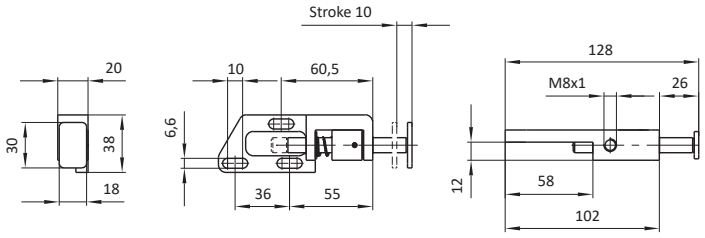

Part No.	Description	m [kg]
102509	MKS-ABF02-R	0,07

Description	Part No.
MKS-ABF02-L	102520

Type: for jaw gripper, for component query, left

Material: material mix

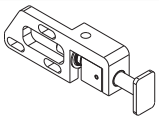

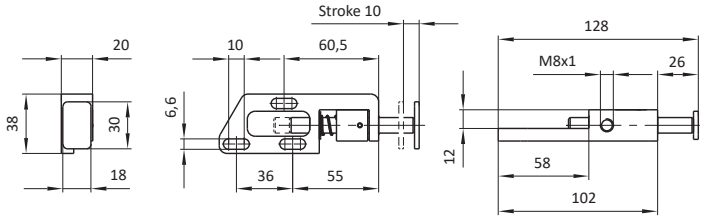

Part No.	Description	m [kg]
102520	MKS-ABF02-L	0,07

Sensor Mounting

Description	Part No.
MKS-OPSA21	102067

Type: for inductive sensor IDS02, with ball Ø28,5

Material: steel

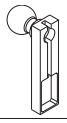

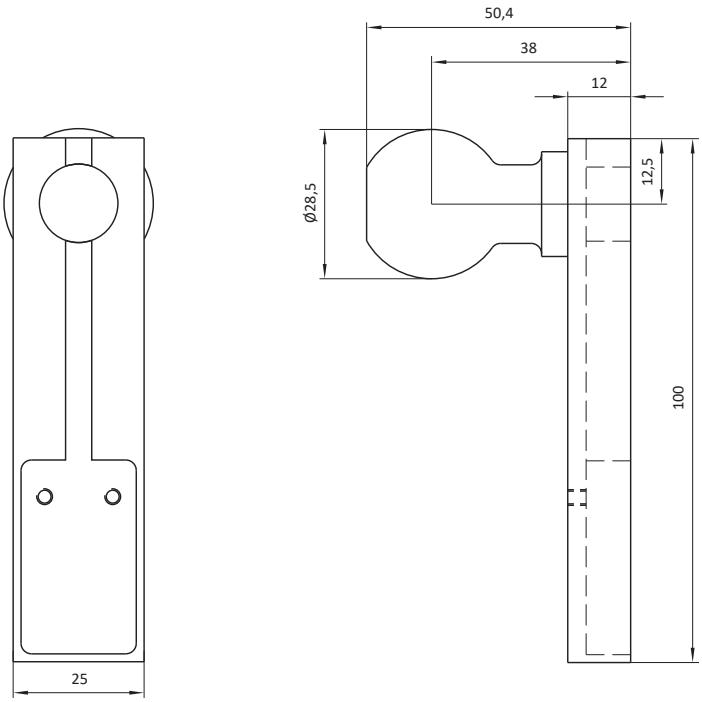

Part No.	Description	m [kg]
102067	MKS-OPSA21	0,25

Description	Part No.
MKS-SAL05	17423

Type: for inductive sensor IDS02, with ball Ø28,5 (beside)

Material: steel

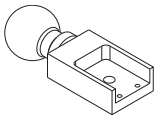

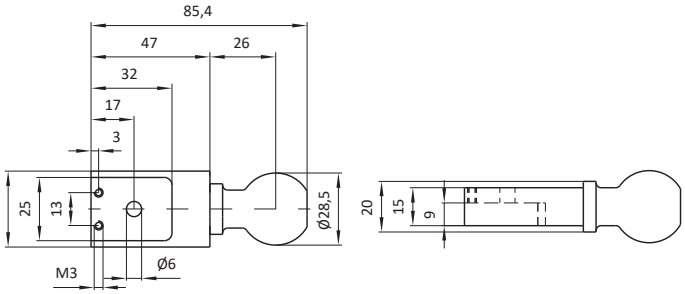

Part No.	Description	m [kg]
17423	MKS-SAL05	0,21

Description	Part No.
MKS-SAL04	16984

Type: for inductive sensor IDS02, with ball Ø28,5 (up)

Material: steel

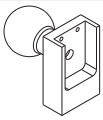

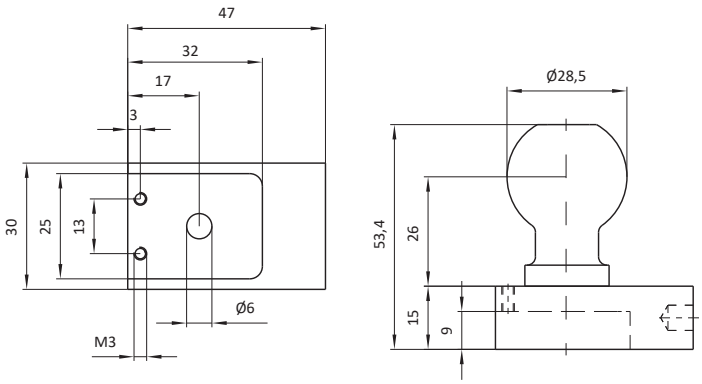

Part No.	Description	m [kg]
16984	MKS-SAL04	0,21

Description	Part No.
MKS-SALXX	see table

Type: for inductive sensor IDS02, weldable

Material: steel

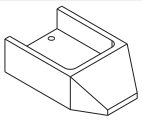

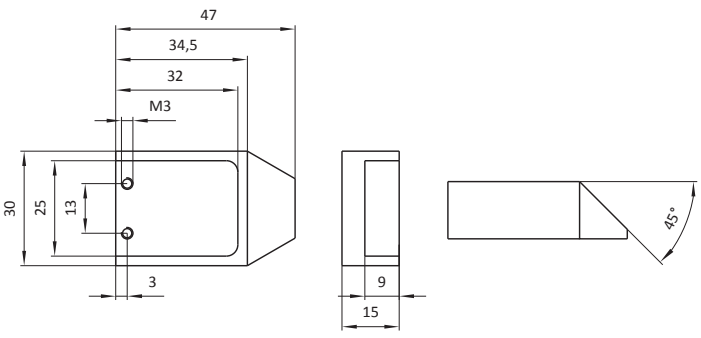

Part No.	Description	Type	m [kg]
12967	MKS-SAL02	with lead-in chamfer	0,09
16414	MKS-SAL03	without lead-in chamfer	0,07
104046	MKS-SAL06	manufactured as a bent part / without lead-in chamfer	0,03

Sensor Mounting

Description	Part No.
MKS-HNS11-X	see table

Type: for reflection light scanner, for Sensopart FT20R-PSM4, for Springer KGSP5x

Material: steel

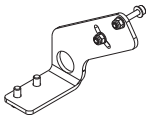

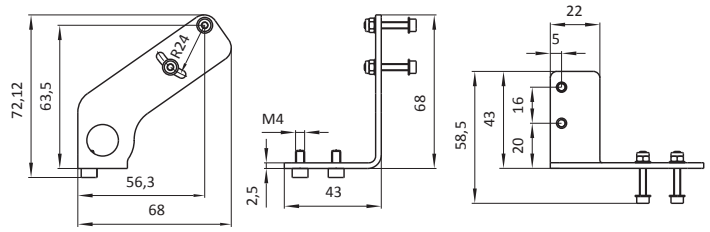

Part No.	Description	m [kg]	left / right
105628	MKS-HNS11-L	0,06	left, symmetrical
105629	MKS-HNS11-R	0,06	right, as illustrated

Description	Part No.
MKS-HNSXX-X	see table

Type: for reflection light scanner, for Sensopart FT20R-PSM4, for MKS20-KGSP3x

Material: steel

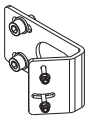

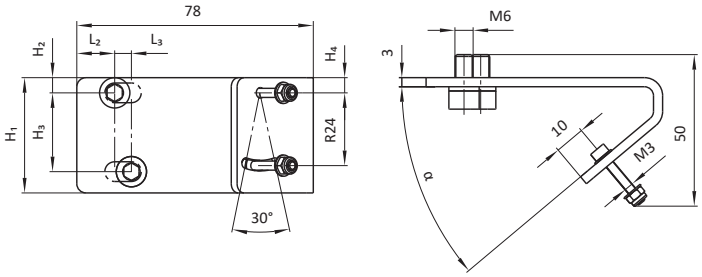

Part No.	Description	H_1 [mm]	H_2 [mm]	H_3 [mm]	H_4 [mm]	L_2 [mm]	L_3 [mm]	α [°]	m [kg]	left / right
16850	MKS-HNS03-L	38	5	26	5	12,5	5,5	40	0,11	left, symmetrical
16851	MKS-HNS03-R	38	5	26	5	12,5	5,5	40	0,11	right, as illustrated
102470	MKS-HNS09-L	45	7,5	30	6	11	12	50	0,11	left, symmetrical
102471	MKS-HNS09-R	45	7,5	30	6	11	12	50	0,11	right, as illustrated

Description	Part No.
MKS-HNS08-X-X	see table

Type: for reflection light scanner, for Sensopart FT20R-PSM4, for KGSP1x

Material: steel

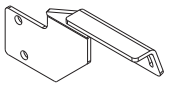

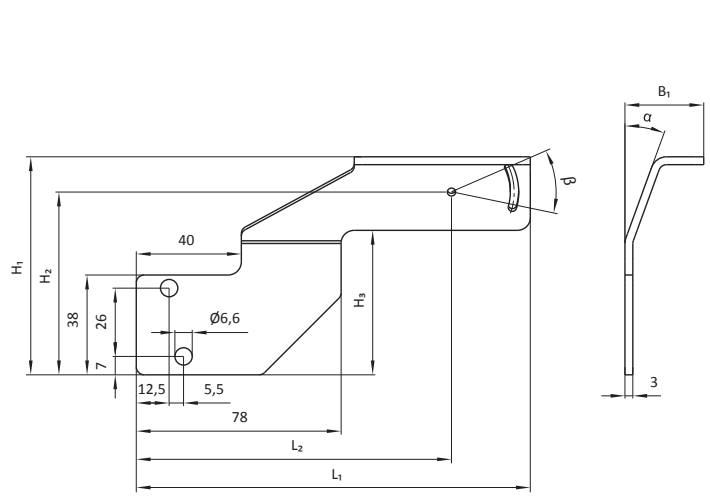

Description	Part No.
MKS-HNS07-X	see table

Type: for reflection light scanner, for Sensopart FT20R-PSM4, for PH jaw-gripper

Material: steel

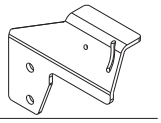

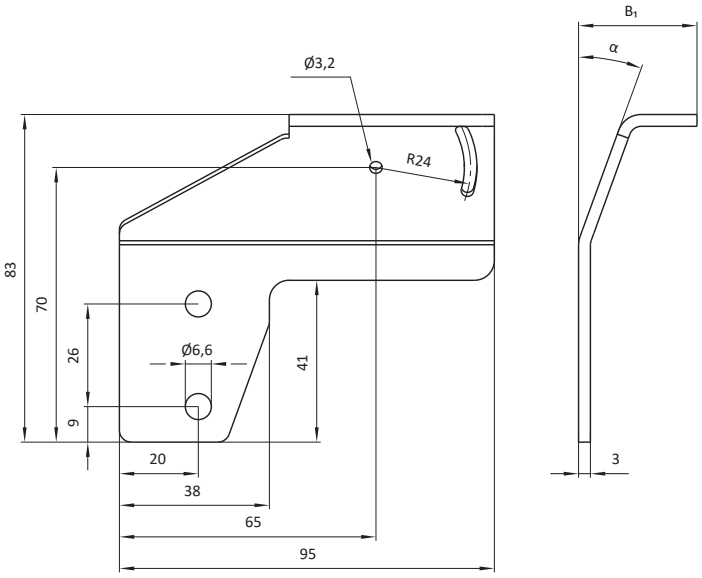

Part No.	Description	H_1 [mm]	H_2 [mm]	H_3 [mm]	B_1 [mm]	L_1 [mm]	L_2 [mm]	α [°]	β [°]	m [kg]	left / right
17939	MKS-HNS08-1-L	90	75	57	20	120	90	0	30	0,13	left, symmetrical
17940	MKS-HNS08-1-R	90	75	57	20	120	90	0	30	0,13	right, as illustrated
17937	MKS-HNS08-L	83	70	55	30	150	120	20	45	0,15	left, symmetrical
17938	MKS-HNS08-R	83	70	55	30	150	120	20	45	0,15	right, as illustrated

Part No.	Description	m [kg]	left / right
17749	MKS-HNS07-L	0,12	left, symmetrical
17758	MKS-HNS07-R	0,12	right, as illustrated

Sensor Mounting

Description	Part No.
MKS-OPSA01-B	13890

Type: distance plate, for light barrier OPS01/02/03/10/14

Material: steel

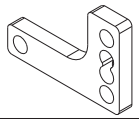

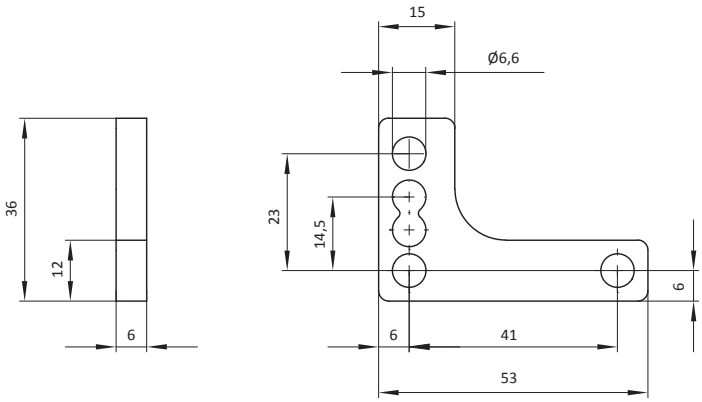

Part No.	Description	m [kg]
13890	MKS-OPSA01-B	0,04

Description	Part No.
MKS-OPSA05-X	see table

Type: for light barrier OPS01/02/03/10/14, weldable

Material: steel

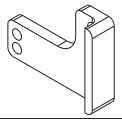

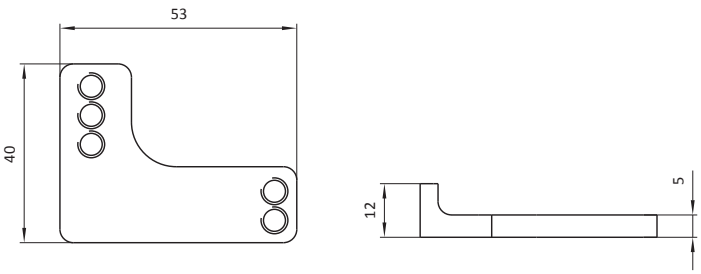

Part No.	Description	m [kg]	Left / right
11054	MKS-OPSA05-R	0,06	right, as illustrated
11055	MKS-OPSA05-L	0,06	left, symmetrical

Description	Part No.
MKS-OPSA01	11049

Type: for light barrier OPS01/02/03/10/14, weldable

Material: steel

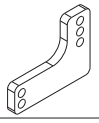

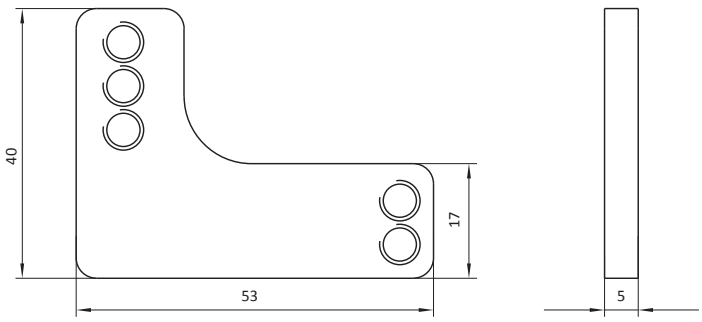

Part No.	Description	m [kg]
11049	MKS-OPSA01	0,05

Description	Part No.
MKS-OPSA08-X	see table

Type: for light barrier OPS01/02/03/10/14, with ball Ø28,5

Material: steel

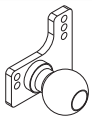

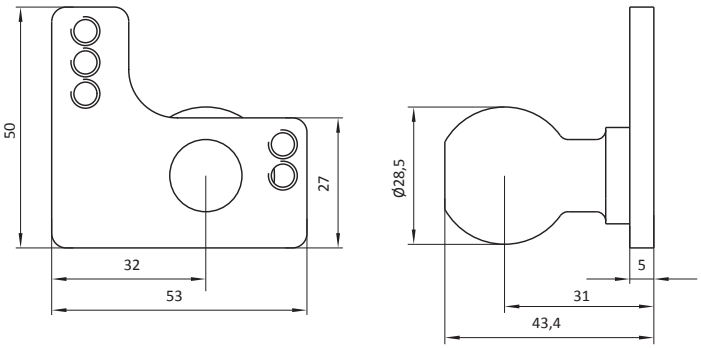

Part No.	Description	m [kg]	Left / right
13894	MKS-OPSA08-R	0,16	right, symmetrical
13895	MKS-OPSA08-L	0,16	left, as illustrated

Sensor Mounting

Description	Part No.
MKSXX-OPSA02-X	see table

Type: for light barrier OPS01/02/03/10/14, with clamp fixed

Material: steel

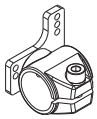

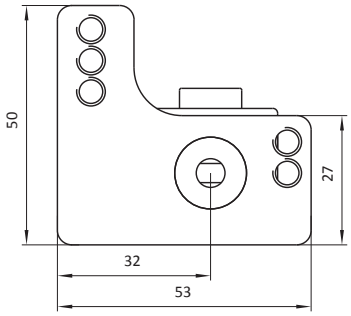

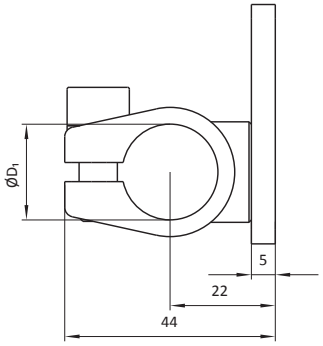

Part No.	Description	D_1 [mm]	m [kg]	Left / right
11100	MKS20-OPSA02-L	20	0,16	left, as illustrated
11101	MKS20-OPSA02-R	20	0,16	right, symmetrical
11102	MKS25-OPSA02-L	25	0,20	left, as illustrated
11103	MKS25-OPSA02-R	25	0,20	right, symmetrical
106746	MKS30-OPSA02-L	30	0,24	left, as illustrated
106747	MKS30-OPSA02-R	30	0,24	right, symmetrical

Description	Part No.
MKS-OPSA03-X-XXX	see table

Type: for light barrier OPS01/02/03/10/14, with tube

Material: steel

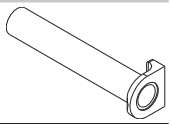

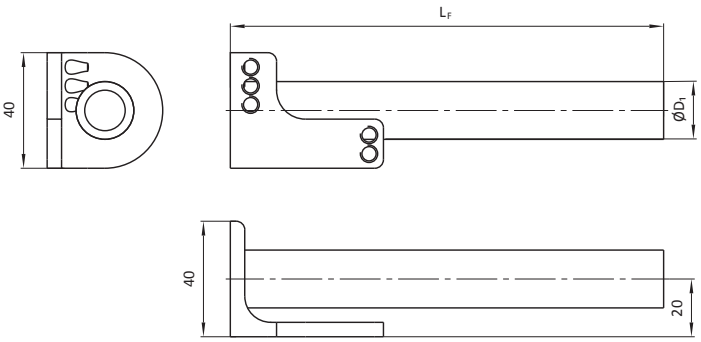

Part No.	Description	$ØD_1$ [mm]	L_1 [mm]	m [kg]	Left / right
11058	MKS20-OPSA03-L-150	20	150	0,27	left, as illustrated
11061	MKS20-OPSA03-L-300	20	300	0,46	left, as illustrated
11065	MKS20-OPSA03-L-500	20	500	0,72	left, as illustrated
11068	MKS20-OPSA03-R-150	20	150	0,27	right, symmetrical
11071	MKS20-OPSA03-R-300	20	300	0,47	right, symmetrical
11075	MKS20-OPSA03-R-500	20	500	0,72	right, symmetrical
11078	MKS25-OPSA03-L-150	25	150	0,29	left, as illustrated
11081	MKS25-OPSA03-L-300	25	300	0,49	left, as illustrated
11085	MKS25-OPSA03-L-500	25	500	0,77	left, as illustrated
11090	MKS25-OPSA03-R-150	25	150	0,29	right, symmetrical
11093	MKS25-OPSA03-R-300	25	300	0,49	right, symmetrical
11097	MKS25-OPSA03-R-500	25	500	0,77	right, symmetrical

Description	Part No.
MKS-OPSA19-X	see table

Type: for light barrier OPS01/02/03/10/14, for MKS-AKU55-1

Material: steel

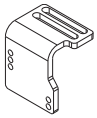

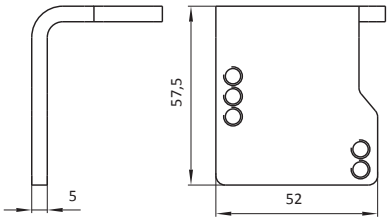

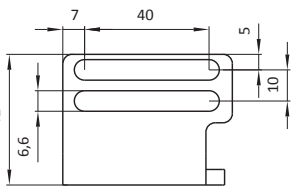

Part No.	Description	m [kg]	left / right
100998	MKS-OPSA19-L	0,15	left, symmetrical
100999	MKS-OPSA19-R	0,15	right, as illustrated

Description	Part No.
MKS-OPSA27-X	see table

Type: for light barrier OPS01/02/03/10/14, for Springer KGSP5x

Material: aluminium

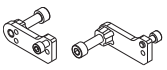

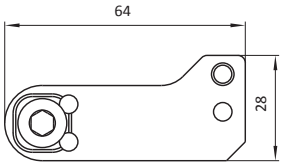

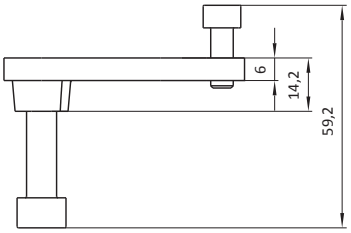

Part No.	Description	m [kg]	left / right
104886	MKS-OPSA27-L	0,05	left, symmetrical
104887	MKS-OPSA27-R	0,05	right, as illustrated

Sensor Mounting

Description	Part No.
MKS-OPSA2X-X-285	see table

Type: for light barrier, with ball Ø28,5

Material: steel

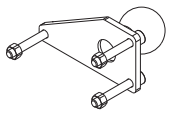

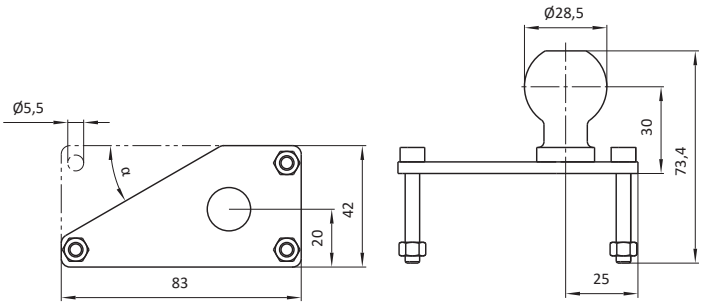

Part No.	Description	Sensor type	Type	m [kg]
104712	MKS-OPSA26-285	Sick WT34-B410	left	0,20
105651	MKS-OPSA26-1-285	Sick WT34-B410	symmetric	0,22
106533	MKS-OPSA28-1-285	Sick WTB27-3P2461	symmetric	0,25

Description	Part No.
MKS-SHA10-400	107008

Type: for reflection light scanner Balluf BOS 26K-PA-1HC-S4-C, with tube Ø25

Material: steel

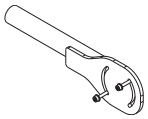

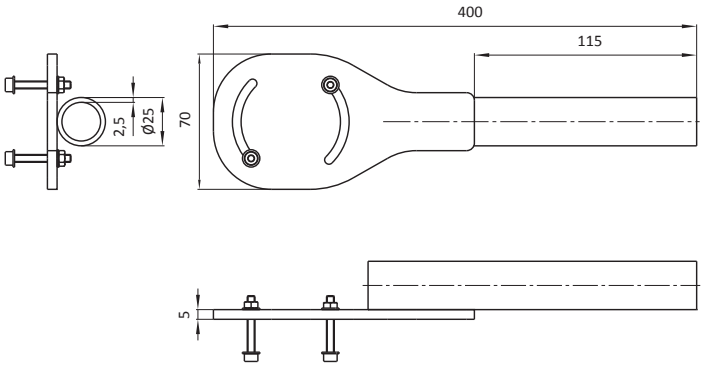

Part No.	Description	m [kg]
107008	MKS25-SHA10-400	0,75

Description	Part No.
MKS-OPSA29-32	106978

Type: for light barrier Balluf BOS 26K-PA-1HC-S4-C, ball Ø32

Material: steel

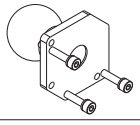

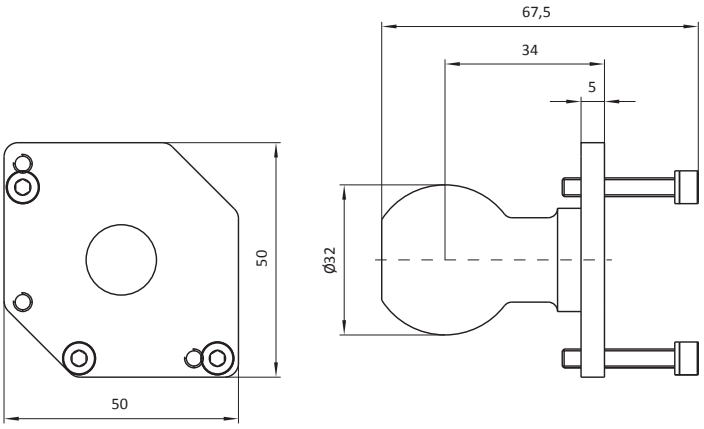

Part No.	Description	m [kg]
106978	MKS-OPSA29-32	0,24

Description	Part No.
MKS-SHA06	17726

Type: for light barrier Baumer FHDK14P5101/S35A, ball Ø28,5

Material: steel

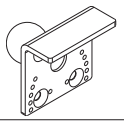

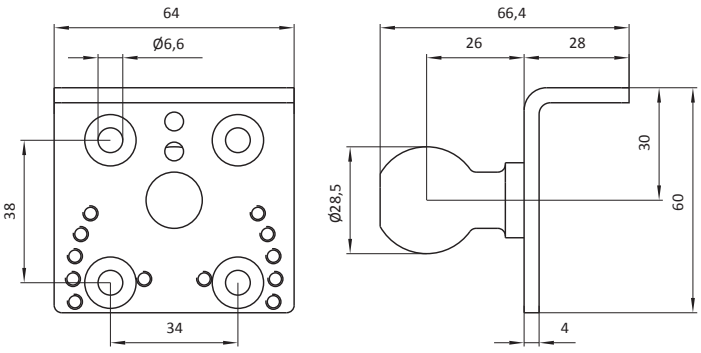

Part No.	Description	m [kg]
17726	MKS-SHA06	0,20

Sensor Mounting

Description	Part No.
MKS-AKUXX-X-XX	see table

Type: with ball, mounting with thread

Material: see table

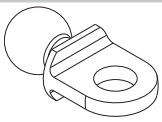

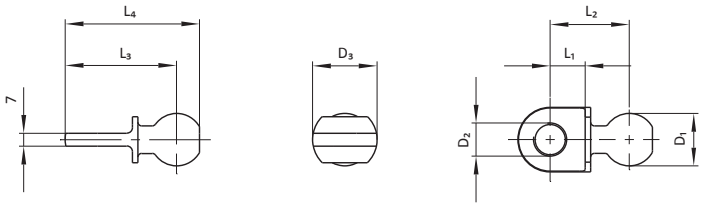

Part No.	Description	D_1 [mm]	D_2 [mm]	D_3 [mm]	L_1 [mm]	L_2 [mm]	L_3 [mm]	L_4 [mm]	m [kg]	Material
104105	MKS-AKU95	28,5	18,5	36	22	46	64	76,4	0,16	D
105756	MKS-AKU95-AL	28,5	18,5	36	22	46	64	76,4	0,06	A
12688	MKS-AKU22-1	28,5	20,5	36	22	46	64	76,4	0,16	D
105762	MKS-AKU22-1-AL	28,5	20,5	36	22	46	64	76,4	0,06	A
15838	MKS-AKU39-2	28,5	30,5	48	24	48	72	84,4	0,19	D
105767	MKS-AKU39-2-AL	28,5	30,5	48	24	48	72	84,4	0,07	A
104106	MKS-AKU95-1	28,5	M18x1	36	22	46	64	76,4	0,17	D
105757	MKS-AKU95-1-AL	28,5	M18x1	36	22	46	64	76,4	0,06	A
12879	MKS-AKU23	28,5	M18x1,5	35	19	43	60,5	73	0,15	D
15575	MKS-AKU22	28,5	M20x1,5	36	22	46	64	76,4	0,16	D
105763	MKS-AKU22-AL	28,5	M20x1,5	36	22	46	64	76,4	0,06	A
100769	MKS-AKU39-3	28,5	M30x1,5	48	24	48	72	84,4	0,19	D
105768	MKS-AKU39-3-AL	28,5	M30x1,5	48	24	48	72	84,4	0,07	A
104107	MKS-AKU95-2	32	18,5	36	22	48	66	79,5	0,21	D
105758	MKS-AKU95-2-AL	32	18,5	36	22	48	66	79,5	0,07	A
13903	MKS-AKU28-1	32	20,5	36	22	48	66	79,5	0,2	D
105773	MKS-AKU28-1-AL	32	20,5	36	22	48	66	79,5	0,07	A
105381	MKS-AKU28-2	32	22	36	22	48	66	79,5	0,2	D
105774	MKS-AKU28-2-AL	32	22	36	22	48	66	79,5	0,07	A
15207	MKS-AKU39	32	30,5	48	24	50	74	87,5	0,23	D
105766	MKS-AKU39-AL	32	30,5	48	24	50	74	87,5	0,08	A
104108	MKS-AKU95-3	32	M18x1	36	22	48	66	79,5	0,21	D
105759	MKS-AKU95-3-AL	32	M18x1	36	22	48	66	79,5	0,07	A
13902	MKS-AKU28	32	M20x1,5	36	22	48	66	79,5	0,21	D
105772	MKS-AKU28-AL	32	M20x1,5	36	22	48	66	79,5	0,07	A
100770	MKS-AKU39-4	32	M30x1,5	48	24	50	74	87,5	0,24	D
105769	MKS-AKU39-4-AL	32	M30x1,5	48	24	50	74	87,5	0,08	A
104109	MKS-AKU95-4	36	18,5	36	22	51	69	84	0,26	D
105760	MKS-AKU95-4-AL	36	18,5	36	22	51	69	84	0,09	A
102577	MKS-AKU22-3	36	20,5	36	22	51	69	84	0,26	D
105765	MKS-AKU22-3-AL	36	20,5	36	22	51	69	84	0,09	A
104103	MKS-AKU39-5	36	30,5	48	24	53	77	92	0,29	D
105770	MKS-AKU39-5-AL	36	30,5	48	24	53	77	92	0,1	A
104110	MKS-AKU95-5	36	M18x1	36	22	51	69	84	0,27	D
105761	MKS-AKU95-5-AL	36	M18x1	36	22	51	69	84	0,09	A
19893	MKS-AKU22-2	36	M20x1,5	36	22	51	69	84	0,26	D
105764	MKS-AKU22-2-AL	36	M20x1,5	36	22	51	69	84	0,09	A
104104	MKS-AKU39-6	36	M30x1,5	48	24	53	77	92	0,3	D
105771	MKS-AKU39-6-AL	36	M30x1,5	48	24	53	77	92	0,1	A

Description	Part No.
MKS-AKUXX-X	see table

Type: with ball, mounting with thread

Material: steel



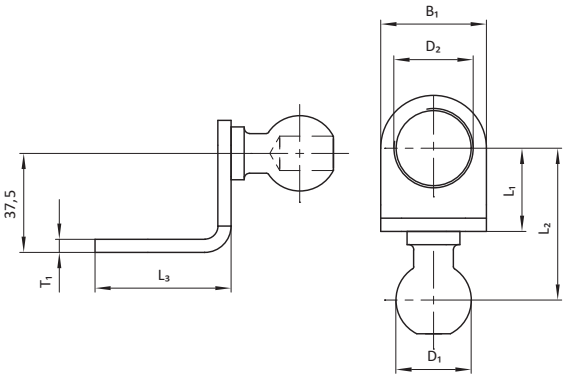

Part No.	Description	D_1 [mm]	D_2 [mm]	B_1 [mm]	L_1 [mm]	L_2 [mm]	L_3 [mm]	T_1 [mm]	m [kg]
17730	MKS-AKU69-1	28,5	18,5	30	25	51	40	5	0,18
12968	MKS-AKU04-1	28,5	30,5	40	31,5	57,5	51,5	5	0,19
10418	MKS-AKU03	28,5	G1/4"	30	20	56	30	5	0,18
17729	MKS-AKU69	28,5	M18x1	30	25	51	40	5	0,18
10420	MKS-AKU04	28,5	M30x1,5	40	31,5	57,5	51,5	5	0,18
18018	MKS-AKU07-1	32	M18x1	30	25	54	40	6	0,18
13395	MKS-AKU07	32	M30x1,5	40	31,5	60,5	51,5	6	0,18

Description	Part No.
MKS-AKU80-X	see table

Type: with ball, for Turck type Bi15u-Q40-AP6X2-H1141

Material: steel



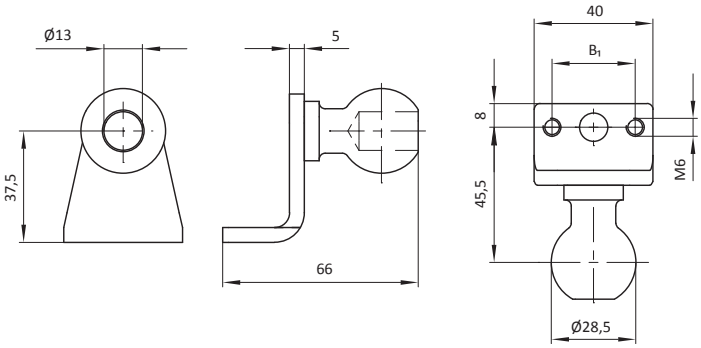

Part No.	Description	B_1 [mm]	m [kg]
100049	MKS-AKU80	28	0,20
103874	MKS-AKU80-2	30	0,20

Material
A → aluminium
D → steel

Sensor Mounting

Description	Part No.
MKS-NKU0X-XX-X	see table

Type: for inductive sensor, with ball Ø28,5

Material: steel

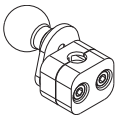

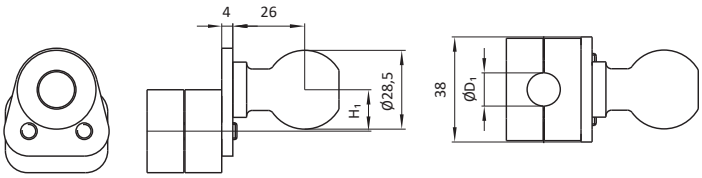

Part No.	Description	ØD1 [mm]	H1 [mm]	m [kg]	Type
13456	MKS-NKU01-12	12	0	0,15	with clamp
13455	MKS-NKU01-18	18	0	0,16	with clamp
13454	MKS-NKU01-30	30	0	0,19	with clamp
19013	MKS-NKU02-12	12	15	0,16	with clamp / with ball staggered
19014	MKS-NKU02-18	18	15	0,17	with clamp / with ball staggered
19015	MKS-NKU02-30	30	15	0,18	with clamp / with ball staggered
18209	MKS-NKU01-30-1	-	-	0,15	without clamp

Description	Part No.
MKS-AKU29	13987

Type: with ball, with spring-loaded seat M30x1,5

Material: material mix



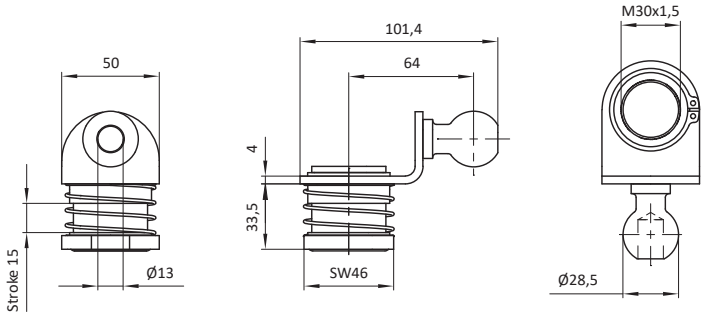

Part No.	Description	m [kg]
13987	MKS-AKU29	0,27

Description	Part No.
MKS-AWXX-XX	see table

Type: adpater with rod journal

Material: see table

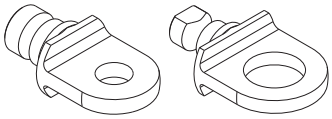

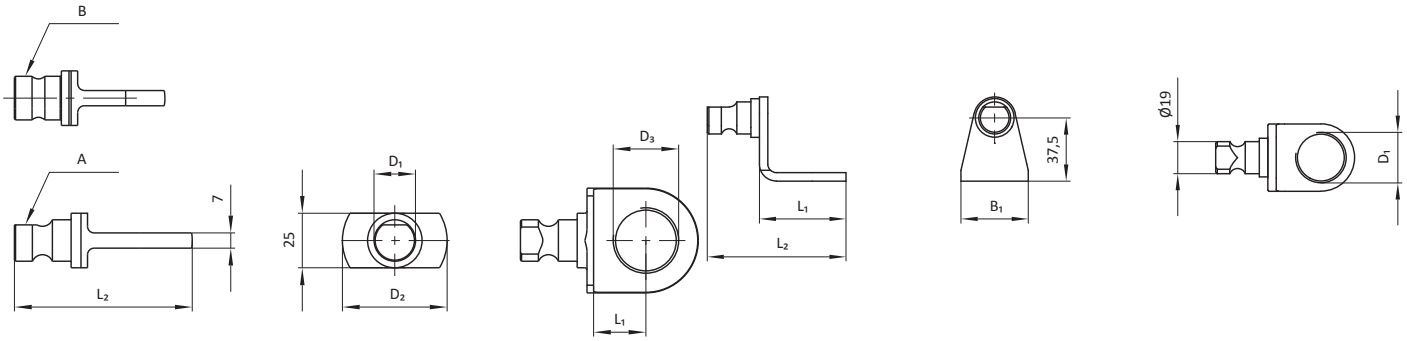

Part No.	Description	Rod journal type	D1 [mm]	D2 [mm]	D3 [mm]	L1 [mm]	L2 [mm]	Material	m [kg]
101901	MKS-AW38	B	19	36	20,5	22	73,5	D	0,14
100688	MKS-AW30-1	B	19	36	M20x1,5	22	73,5	D	0,14
100689	MKS-AW30-2	B	19	48	M20x1,6	24	81,5	D	0,17
12922	MKS-AW17	A	20	36	18,5	22	69	D	0,15
12923	MKS-AW18	A	20	36	20,5	22	69	D	0,14
12924	MKS-AW19	A	20	48	30,5	24	77	D	0,17
107557	MKS-AW19-AL	A	20	48	30,5	24	77	A	0,06
107830	MKS-AW18-3	A	20	36	M16x1	22	69	D	0,15
17040	MKS-AW18-1	A	20	36	M20x1,5	22	69	D	0,15
100774	MKS-AW18-2	A	20	48	M20x1,6	24	77	D	0,17

Description	Part No.
MKS-AW32-X	see table

Type: rod journal with plain, mounting with thread

Material: see table



Part No.	Description	D1 [mm]	B1 [mm]	L1 [mm]	L2 [mm]	m [kg]	Material
100776	MKS-AW32-2	M30x1,5	40	51,5	82,5	0,16	D
100775	MKS-AW32-1	M18x1	30	40	71	0,14	D
103392	MKS-AW32-3	30,5	40	51,5	82,5	0,15	D
106767	MKS-AW32-3-AL	30,5	40	51,5	82,5	0,06	A
103393	MKS-AW32-4	18,5	30	40	71	0,14	D

Material
A → aluminium
D → steel

Technical changes and errors are subject to change without notice!
www.springer.group
Document Date: CW 12.2025

Sensor Mounting

Description	Part No.
MKS-AW24	10419

Type: with rod journal, for inductive sensor with M30x1,5

Material: steel



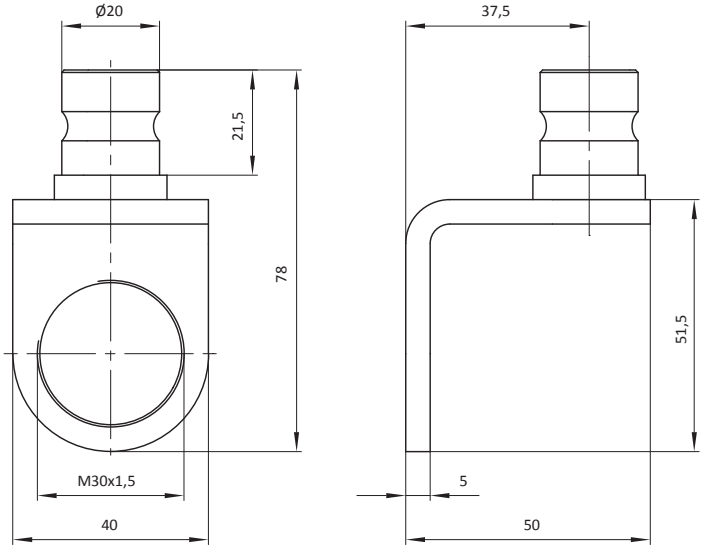

Part No.	Description	m [kg]
10419	MKS-AW24	0,16

Description	Part No.
MKS-HNS12	106657

Type: for inductive sensor IDS01/01-1/09, for MKS-SAMF02-20-80

Material: aluminium

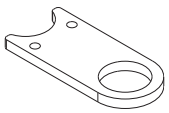

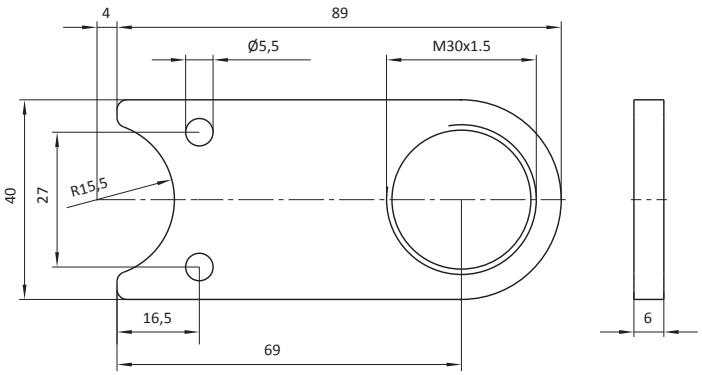

Part No.	Description	m [kg]
106657	MKS-HNS12	0,04

Description	Part No.
MKS25-HNS1X-18-XX-1	see table

Type: for inductive sensor, with tube connection

Material: aluminium

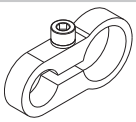

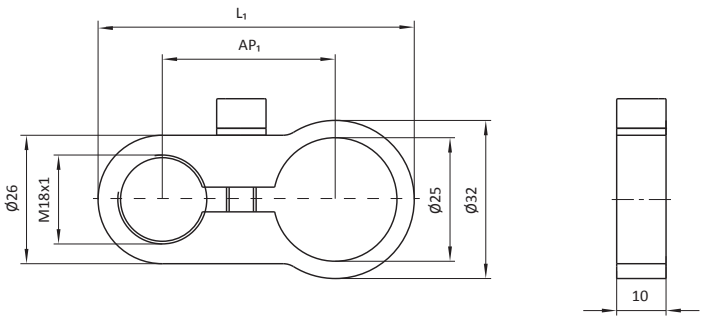

Part No.	Description	L_1 [mm]	AP_1 [mm]	m [kg]
107571	MKS25-HNS15-18-35	64	35	0,03
107575	MKS25-HNS15-18-35-1	64	35	0,03
107572	MKS25-HNS16-18-45	74	45	0,04
107576	MKS25-HNS16-18-45-1	74	45	0,04

Connector

Description	Part No.
MKS-EST34	103066

Type: connector for couplings, loose side

Material: aluminium

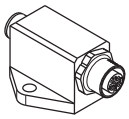

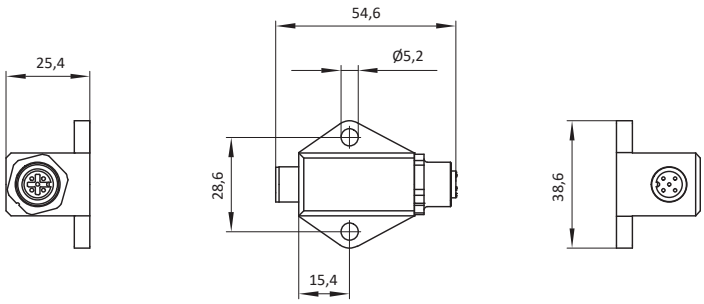

Part No.	Description	m [kg]
103066	MKS-EST34	0,06

Description	Part No.
MKS-EST34-F	107786

Type: connector for couplings, fixed side

Material: aluminium

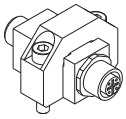

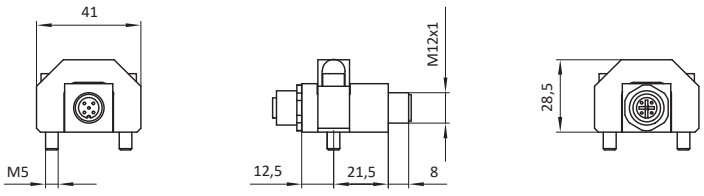

Part No.	Description	m [kg]
107786	MKS-EST34-F	0,55

Description	Part No.
MKS-EST28-F	102405

Type: connector for couplings, fixed side

Material: composite

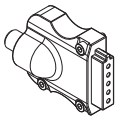

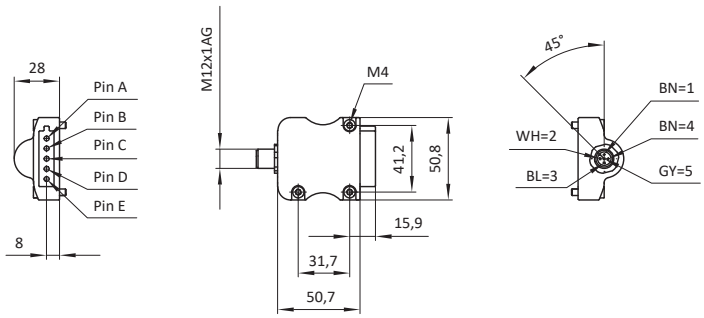

Part No.	Description	Pin A brown	Pin B blue	Pin C black	Pin D white	Pin E grey	m [kg]
102405	MKS-EST28-F	BN > +24V	BL > -ground	BK > component query	WH > forward	GY > back	0,05

Description	Part No.
MKS-EST28-L	102404

Type: connector for couplings, loose side

Material: composite

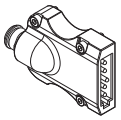

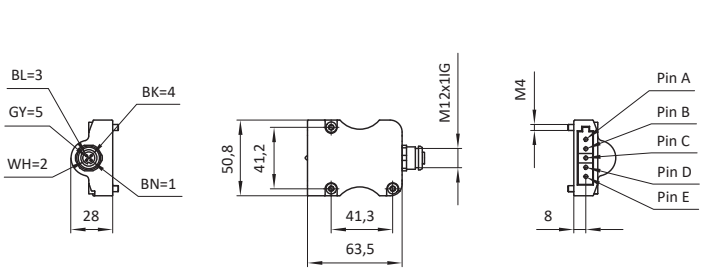

Part No.	Description	Pin A brown	Pin B blue	Pin C black	Pin D white	Pin E grey	m [kg]
102404	MKS-EST28-L	BN > +24V	BL > -ground	BK > component query	WH > forward	GY > back	0,05

Description	Part No.
MKS-EST20-S1	105626

Type: for carrying frame, reduced length, with rotatable connector

Material: material mix

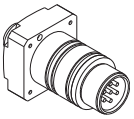

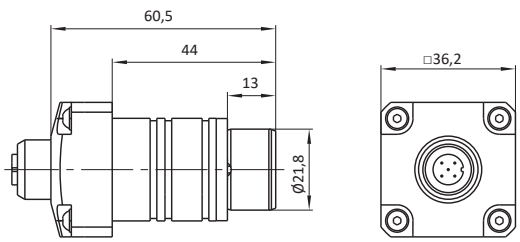

Pin assignment

Part No.	Description	Pin assignment Pin 1	Pin 2	Pin 3	Pin 4	Pin 5	Pin 6	m [kg]
105626	MKS-EST20-S1	brown (+24V)	white (jumper wire)	blue (ground)	green (jumper wire)	yellow (jumper wire)	red (jumper wire)	0,07

Cable Mounting

Description	Part No.
MKSXX-HKBL01	see table

Type: with cable guide

Material: steel



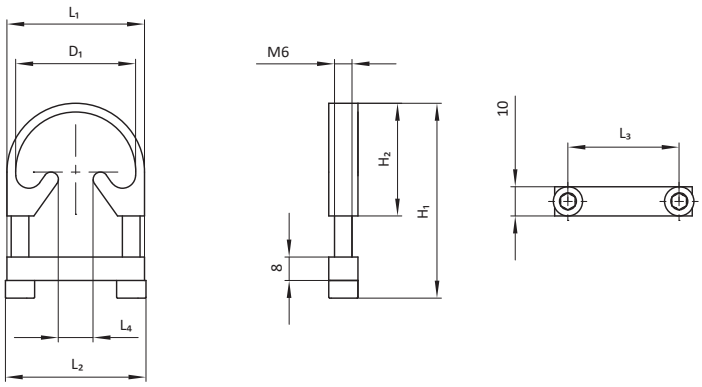

Part No.	Description	D_1 [mm]	H_1 [mm]	H_2 [mm]	L_1 [mm]	L_2 [mm]	L_3 [mm]	m [kg]
100048	MKS25-HKBL01	41	66,5	38,5	47	48	38	0,09
100054	MKS30-HKBL01	46	71,5	41	52	53	43	0,09
108212	MKS40-HKBL01	49,7	76	53	60	60	49	0,19

7. Transport Paddles, Deposits and Connections

Index

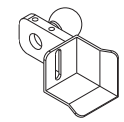
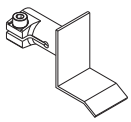
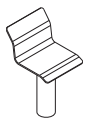
Transport Paddle 200

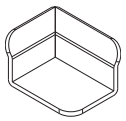
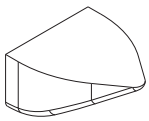
Transport Paddle Accessories 205

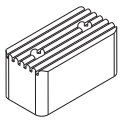
Support Point 206

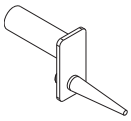
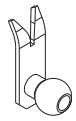
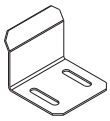
Position Adapter 207

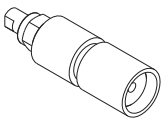
Magnet Mounting 208

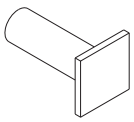
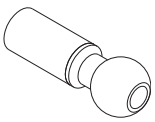
Tube with Ball/Plate 209

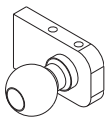
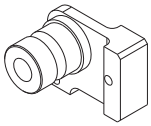
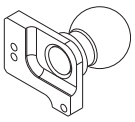
Ball/Rod Journal with Weld-On Plate..... 210

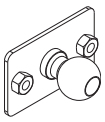

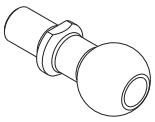
Ball with Plate/Angle/Thread 211

Transport Paddle

Description	Part No.
MKS-TSXX-S-R-1	see table

Type: paddle with side stop, with ball and long hole for downholder, right

Material: steel

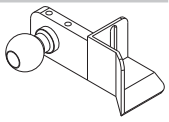

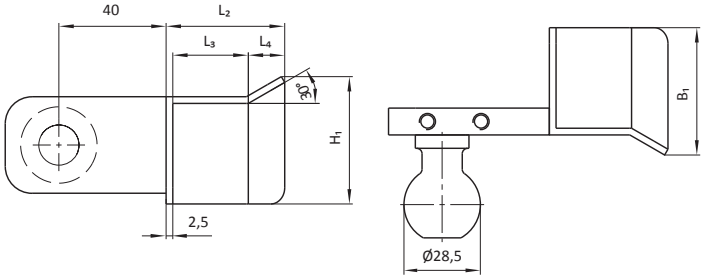

Part No.	Description	H1 [mm]	B1 [mm]	L2 [mm]	L3 [mm]	L4 [mm]	m [mm]
100994	MKS-TS39-S-R-1	48	48	44	28	14	0,34
101001	MKS-TS40-S-R-1	48	35	27	11	14	0,30
101003	MKS-TS41-S-R-1	55	55	40	28	10	0,36

Description	Part No.
MKS-TSXX-S-L-1	see table

Type: paddle with side stop, with ball and long hole for downholder, left

Material: steel

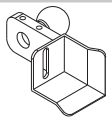

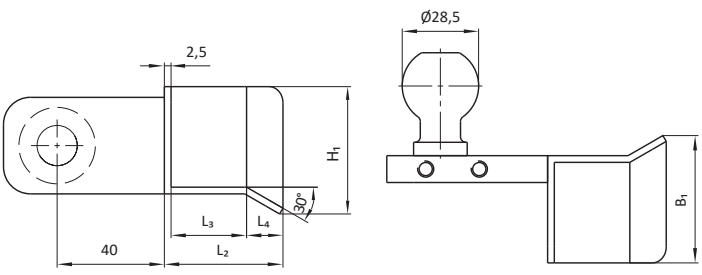

Part No.	Description	H1 [mm]	B1 [mm]	L2 [mm]	L3 [mm]	L4 [mm]	m [mm]
100993	MKS-TS39-S-L-1	48	48	44	28	14	0,34
101000	MKS-TS40-S-L-1	48	35	27	11	14	0,30
101002	MKS-TS41-S-L-1	55	55	40	28	10	0,36

Description	Part No.
MKS-TS02-S-L-SX	see table

Type: paddle with side stop, with ball, with passage opening and mounting for optical sensor, left

Material: steel

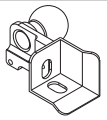

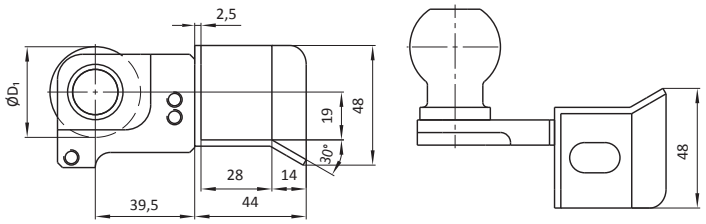

Part No.	Description	D1 [mm]	m [kg]
103516	MKS-TS02-S-L-S2	32	0,44
103514	MKS-TS02-S-L-S1	36	0,43

Description	Part No.
MKS-TS02-S-R-SX	see table

Type: paddle with side stop, with ball, with passage opening and mounting for optical sensor, right

Material: steel

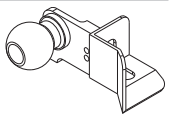

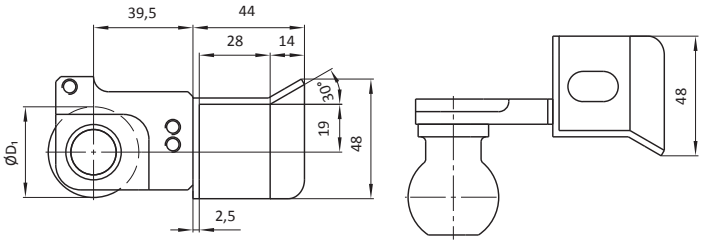

Part No.	Description	D1 [mm]	m [kg]
103517	MKS-TS02-S-R-S2	32	0,44
103515	MKS-TS02-S-R-S1	36	0,43

Description	Part No.
MKS30-TSXX-S1-KAR	see table

Type: paddle with side stop and holes for downholder, right

Material: steel

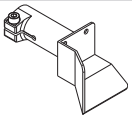

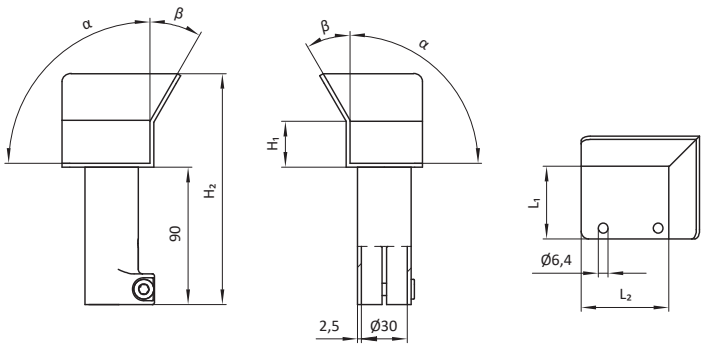

Part No.	Description	H1 [mm]	H2 [mm]	L1 [mm]	L2 [mm]	α [°]	β [°]	m [kg]
108024	MKS30-TS01-S1-KAR	30	151,2	47,5	57,5	90	30	0,64
108022	MKS30-TS15-S1-KAR	32	130	50	50	93	23	0,36

Description	Part No.
MKS30-TSXX-S1-KAL	see table

Type: paddle with side stop and holes for downholder, left

Material: steel

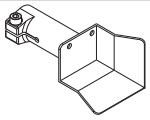

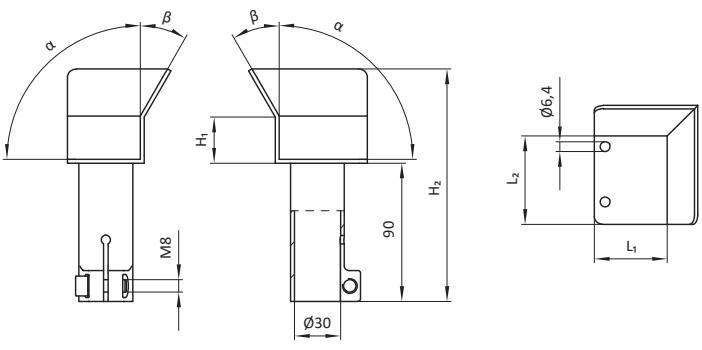

Part No.	Description	H1 [mm]	H2 [mm]	L1 [mm]	L2 [mm]	α [°]	β [°]	m [kg]
108025	MKS30-TS01-S1-KAL	30	151,2	47,5	57,5	90	30	0,64
108023	MKS30-TS15-S1-KAL	32	130	50	50	93	23	0,36

Transport Paddle

Description	Part No.
MKSXX-TSXX-XX-KAR	see table

Type: paddle without side stop, with clamp seat

Material: steel

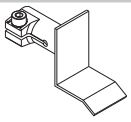

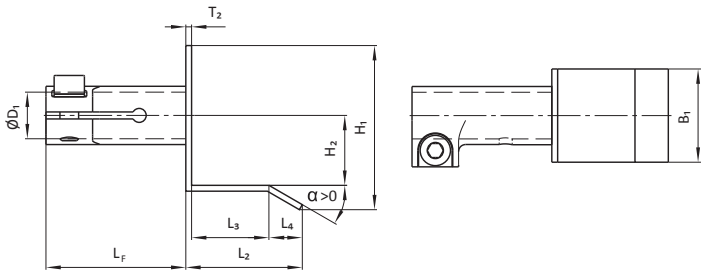

Part No.	Description	D_1 [mm]	H_1 [mm]	H_2 [mm]	B_1 [mm]	L_F [mm]	L_2 [mm]	L_3 [mm]	L_4 [mm]	T_2 [mm]	α [°]	m [kg]
11380	MKS20-TS10-40-KAR	20	71	30	40	60	50	33	15	2,5	30	0,20
11381	MKS20-TS10-50-KAR	20	71	30	50	60	50	33	15	2,5	30	0,22
11382	MKS20-TS10-60-KAR	20	71	30	60	60	50	33	15	2,5	30	0,25
16632	MKS25-TS10-40-KAR	25	72	24,5	40	70	60	24	33	3	28	0,27
106745	MKS30-TS10-60-KAR	30	71	30	60	60	50	33	15	2,5	30	0,30
15004	MKS30-TS17-40-KAR	30	88	22,5	40	90	76	46	28	5	30	0,46
11586	MKS30-TS17-60-KAR	30	88	22,5	60	90	76	46	28	5	30	0,57
11589	MKS30-TS18-40-KAR	30	97	22,5	40	90	76	26	43	5	30	0,44

Description	Part No.
MKSXX-TSXX-KAX-XX	see table

Type: paddle with side stop, with clamp seat

Material: see table

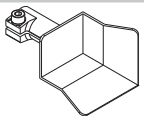

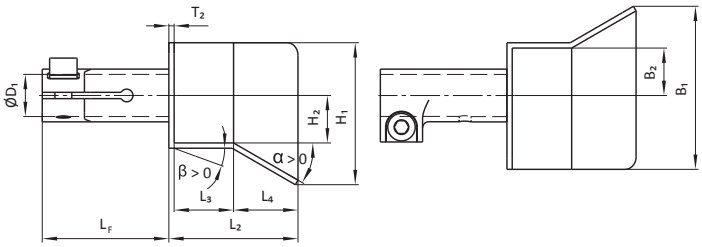

Part No.	Description	D_1 [mm]	H_1 [mm]	H_2 [mm]	B_1 [mm]	B_2 [mm]	L_F [mm]	L_2 [mm]	L_3 [mm]	L_4 [mm]	T_2 [mm]	α [°]	β [°]	m [kg]	Material
11372	MKS20-TS01-KAL	20	68	22,5	78	22,5	60	61	28	31	2,5	30	0	0,32	D
11371	MKS20-TS01-KAR	20	68	22,5	78	22,5	60	61	28	31	2,5	30	0	1,32	D
11374	MKS20-TS02-KAL	20	48	17,5	48	17,5	60	44	28	14	2,5	30	0	0,21	D
104276	MKS20-TS02-KAL-VA	20	48	17,5	48	17,5	60	44	28	14	2,5	30	0	0,21	C
11373	MKS20-TS02-KAR	20	48	17,5	48	17,5	60	44	28	14	2,5	30	0	0,21	D
104278	MKS20-TS02-KAR-VA	20	48	17,5	48	17,5	60	44	28	14	2,5	30	0	0,21	C
11279	MKS25-TS01-KAL	25	68	22,5	78	22,5	70	61	28	31	2,5	30	0	0,34	D
11278	MKS25-TS01-KAR	25	68	22,5	78	22,5	70	61	28	31	2,5	30	0	0,34	D
11376	MKS25-TS02-KAL	25	48	17,5	48	17,5	70	44	28	14	2,5	30	0	0,25	D
11375	MKS25-TS02-KAR	25	48	17,5	48	17,5	70	44	28	14	2,5	30	0	0,25	D
11484	MKS30-TS01-KAL	30	68	22,5	78	22,5	90	61	28	31	2,5	30	0	0,42	D
11485	MKS30-TS01-KAR	30	68	22,5	78	22,5	90	61	28	31	2,5	30	0	0,42	D
11509	MKS30-TS02-KAL	30	48	17,5	48	17,5	90	44	28	14	2,5	30	0	0,34	D
11508	MKS30-TS02-KAR	30	48	17,5	48	17,5	90	44	28	14	2,5	30	0	0,34	D
11579	MKS30-TS15-KAL	30	60	25	60	25	90	40	30	8	2,5	23	7	0,35	D
11578	MKS30-TS15-KAR	30	60	25	60	25	90	40	30	8	2,5	23	7	0,35	D
11582	MKS30-TS16-KAR	30	90	32,5	90	32,5	90	70	35	32	3	36	0	0,56	D

Description	Part No.
MKSXX-XXXX-X-XXXX	see table

Type: paddle with side stop, with tube

Material: steel

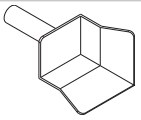

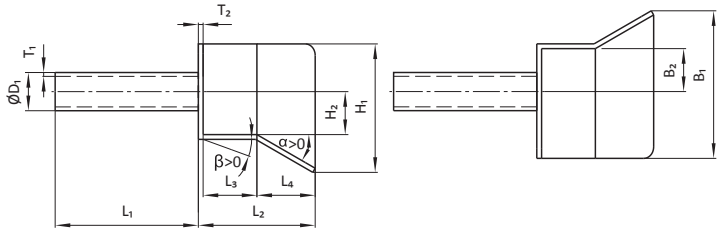

Part No.	Description	D_1 [mm]	H_1 [mm]	H_2 [mm]	B_1 [mm]	B_2 [mm]	L_1 [mm]	L_2 [mm]	L_3 [mm]	L_4 [mm]	T_1 [mm]	T_2 [mm]	α [°]	β [°]	m [kg]
100959	MKS20-AB03-100-VA	20	39	26,5	65	20	100	65	45	19	2,5	2	30	8	0,19
16457	MKS20-TS01-K-L-100	20	61	22,5	71	22,5	100	48,5	28	19	2,5	2,5	30	0	0,30
16459	MKS20-TS01-K-L-200	20	61	22,5	71	22,5	200	48,5	28	19	2,5	2,5	30	0	0,41
16461	MKS20-TS01-K-L-300	20	61	22,5	71	22,5	300	48,5	28	19	2,5	2,5	30	0	0,52
16462	MKS20-TS01-K-R-100	20	61	22,5	71	22,5	100	48,5	28	19	2,5	2,5	30	0	0,30
16464	MKS20-TS01-K-R-200	20	61	22,5	71	22,5	200	48,5	28	19	2,5	2,5	30	0	0,41
16466	MKS20-TS01-K-R-300	20	61	22,5	71	22,5	300	48,5	28	19	2,5	2,5	30	0	0,52
11413	MKS20-TS01-L-100	20	68	22,5	78	22,5	100	61	28	31	2,5	2,5	30	0	0,30
11415	MKS20-TS01-L-200	20	68	22,5	78	22,5	200	61	28	31	2,5	2,5	30	0	0,41
11417	MKS20-TS01-L-300	20	68	22,5	78	22,5	300	61	28	31	2,5	2,5	30	0	0,52
11419	MKS20-TS01-L-400	20	68	22,5	78	22,5	400	61	28	31	2,5	2,5	30	0	0,63
11421	MKS20-TS01-L-500	20	68	22,5	78	22,5	500	61	28	31	2,5	2,5	30	0	0,75
11422	MKS20-TS01-R-100	20	68	22,5	78	22,5	100	61	28	31	2,5	2,5	30	0	0,30
11424	MKS20-TS01-R-200	20	68	22,5	78	22,5	200	61	28	31	2,5	2,5	30	0	0,41
11426	MKS20-TS01-R-300	20	68	22,5	78	22,5	300	61	28	31	2,5	2,5	30	0	0,55
11428	MKS20-TS01-R-400	20	68	22,5	78	22,5	400	61	28	31	2,5	2,5	30	0	0,65

Material
C → material mix
D → steel

Technical changes and errors are subject to change without notice!
www.springer.group
Document Date: CW 12.2025

Transport Paddle

Part No.	Description	D_1 [mm]	H_1 [mm]	H_2 [mm]	B_1 [mm]	B_2 [mm]	L_1 [mm]	L_2 [mm]	L_3 [mm]	L_4 [mm]	T_1 [mm]	T_2 [mm]	α [°]	β [°]	m [kg]
11430	MKS20-TS01-R-500	20	68	22,5	78	22,5	500	61	28	31	2,5	2,5	30	0	0,74
11431	MKS20-TS02-L/R-100	20	48	17,5	48	17,5	100	44	28	14	2,5	2,5	30	0	0,21
11433	MKS20-TS02-L/R-200	20	48	17,5	48	17,5	200	44	28	14	2,5	2,5	30	0	0,32
11435	MKS20-TS02-L/R-300	20	48	17,5	48	17,5	300	44	28	14	2,5	2,5	30	0	0,42
11437	MKS20-TS02-L/R-400	20	48	17,5	48	17,5	400	44	28	14	2,5	2,5	30	0	0,53
11439	MKS20-TS02-L/R-500	20	48	17,5	48	17,5	500	44	28	14	2,5	2,5	30	0	0,63
105593	MKS20-TS02-L/R-B100	20	48	17,5	48	17,5	100	44	28	14	1,5	2,5	30	0	0,17
105595	MKS20-TS02-L/R-B200	20	48	17,5	48	17,5	200	44	28	14	1,5	2,5	30	0	0,24
105597	MKS20-TS02-L/R-B300	20	48	17,5	48	17,5	300	44	28	14	1,5	2,5	30	0	0,31
16826	MKS20-TS11-L-100	20	36	12,5	46	17,5	100	25	13	10	2,5	2,5	30	0	0,17
16828	MKS20-TS11-L-200	20	36	12,5	46	17,5	200	25	13	10	2,5	2,5	30	0	0,27
16830	MKS20-TS11-L-300	20	36	12,5	46	17,5	300	25	13	10	2,5	2,5	30	0	0,37
16832	MKS20-TS11-L-400	20	36	12,5	46	17,5	400	25	13	10	2,5	2,5	30	0	0,48
16834	MKS20-TS11-L-500	20	36	12,5	46	17,5	500	25	13	10	2,5	2,5	30	0	0,58
16836	MKS20-TS11-R-100	20	36	12,5	46	17,5	100	25	13	10	2,5	2,5	30	0	0,17
16838	MKS20-TS11-R-200	20	36	12,5	46	17,5	200	25	13	10	2,5	2,5	30	0	0,27
16840	MKS20-TS11-R-300	20	36	12,5	46	17,5	300	25	13	10	2,5	2,5	30	0	0,37
16842	MKS20-TS11-R-400	20	36	12,5	46	17,5	400	25	13	10	2,5	2,5	30	0	0,48
16844	MKS20-TS11-R-500	20	36	12,5	46	17,5	500	25	13	10	2,5	2,5	30	0	0,58
16815	MKS20-TS19-LR-100	20	75	20	75	20	100	58,5	45	10	2,5	2,5	15	15	0,33
16817	MKS20-TS19-LR-200	20	75	20	75	20	200	58,5	45	10	2,5	2,5	15	15	0,43
16819	MKS20-TS19-LR-300	20	75	20	75	20	300	58,5	45	10	2,5	2,5	15	15	0,53
16821	MKS20-TS19-LR-400	20	75	20	75	20	400	58,5	45	10	2,5	2,5	15	15	0,64
101234	MKS25-AB03-100-VA	25	39	26,5	65	20	100	65	45	19	2,5	2	30	8	0,24
11291	MKS25-TS01-L-100	25	68	22,5	78	22,5	100	61	28	31	2,5	2,5	30	0	0,35
11293	MKS25-TS01-L-200	25	68	22,5	78	22,5	200	61	28	31	2,5	2,5	30	0	0,48
11295	MKS25-TS01-L-300	25	68	22,5	78	22,5	300	61	28	31	2,5	2,5	30	0	0,62
11297	MKS25-TS01-L-400	25	68	22,5	78	22,5	400	61	28	31	2,5	2,5	30	0	0,75
11299	MKS25-TS01-L-500	25	68	22,5	78	22,5	500	61	28	31	2,5	2,5	30	0	0,88
11280	MKS25-TS01-R-100	25	68	22,5	78	22,5	100	61	28	31	2,5	2,5	30	0	0,35
11282	MKS25-TS01-R-200	25	68	22,5	78	22,5	200	61	28	31	2,5	2,5	30	0	0,48
11284	MKS25-TS01-R-300	25	68	22,5	78	22,5	300	61	28	31	2,5	2,5	30	0	0,62
11286	MKS25-TS01-R-400	25	68	22,5	78	22,5	400	61	28	31	2,5	2,5	30	0	0,75
11288	MKS25-TS01-R-500	25	68	22,5	78	22,5	500	61	28	31	2,5	2,5	30	0	0,88
11440	MKS25-TS02-L/R-100	25	48	17,5	48	17,5	100	44	28	14	2,5	2,5	30	0	0,24
11442	MKS25-TS02-L/R-200	25	48	17,5	48	17,5	200	44	28	14	2,5	2,5	30	0	0,38
11444	MKS25-TS02-L/R-300	25	48	17,5	48	17,5	300	44	28	14	2,5	2,5	30	0	0,52
11446	MKS25-TS02-L/R-400	25	48	17,5	48	17,5	400	44	28	14	2,5	2,5	30	0	0,65
11448	MKS25-TS02-L/R-500	25	48	17,5	48	17,5	500	44	28	14	2,5	2,5	30	0	0,78
101804	MKS25-TS15-L/R-75	25	60	14,5	60	14,5	75	40	30	8	2,5	2,5	23	7	0,24
101805	MKS25-TS15-L/R-100	25	60	14,5	60	14,5	100	40	30	8	2,5	2,5	23	7	0,28
101807	MKS25-TS15-L/R-200	25	60	14,5	60	14,5	200	40	30	8	2,5	2,5	23	7	0,42
101809	MKS25-TS15-L/R-300	25	60	14,5	60	14,5	300	40	30	8	2,5	2,5	23	7	0,56
101811	MKS25-TS15-L/R-400	25	60	14,5	60	14,5	400	40	30	8	2,5	2,5	23	7	0,70
101778	MKS25-TS15-L/R-500	25	60	14,5	60	14,5	500	40	30	8	2,5	2,5	23	7	0,83
11451	MKS30-TS01-L-100	30	68	22,5	78	22,5	100	61	28	31	2,5	2,5	30	0	0,41
11453	MKS30-TS01-L-200	30	68	22,5	78	22,5	200	61	28	31	2,5	2,5	30	0	0,57
11455	MKS30-TS01-L-300	30	68	22,5	78	22,5	300	61	28	31	2,5	2,5	30	0	0,73
11457	MKS30-TS01-L-400	30	68	22,5	78	22,5	400	61	28	31	2,5	2,5	30	0	0,89
11459	MKS30-TS01-L-500	30	68	22,5	78	22,5	500	61	28	31	2,5	2,5	30	0	1,05
11462	MKS30-TS01-R-100	30	68	22,5	78	22,5	100	61	28	31	2,5	2,5	30	0	0,41
11464	MKS30-TS01-R-200	30	68	22,5	78	22,5	200	61	28	31	2,5	2,5	30	0	0,57
11466	MKS30-TS01-R-300	30	68	22,5	78	22,5	300	61	28	31	2,5	2,5	30	0	0,73
11468	MKS30-TS01-R-400	30	68	22,5	78	22,5	400	61	28	31	2,5	2,5	30	0	0,89
11470	MKS30-TS01-R-500	30	68	22,5	78	22,5	500	61	28	31	2,5	2,5	30	0	1,05
11473	MKS30-TS02-L/R-100	30	48	17,5	48	17,5	100	44	28	14	2,5	2,5	30	0	0,27
11475	MKS30-TS02-L/R-200	30	48	17,5	48	17,5	200	44	28	14	2,5	2,5	30	0	0,44
11477	MKS30-TS02-L/R-300	30	48	17,5	48	17,5	300	44	28	14	2,5	2,5	30	0	0,60
11479	MKS30-TS02-L/R-400	30	48	17,5	48	17,5	400	44	28	14	2,5	2,5	30	0	0,78
11481	MKS30-TS02-L/R-500	30	48	17,5	48	17,5	500	44	28	14	2,5	2,5	30	0	0,95
11577	MKS30-TS15-L/R-100	30	60	25	60	25	100	40	30	8	2,5	2,5	23	7	0,33
12049	MKS30-TS15-L/R-200	30	60	25	60	25	200	40	30	8	2,5	2,5	23	7	0,50
12051	MKS30-TS15-L/R-300	30	60	25	60	25	300	40	30	8	2,5	2,5	23	7	0,66
12053	MKS30-TS15-L/R-400	30	60	25	60	25	400	40	30	8	2,5	2,5	23	7	0,83
12055	MKS30-TS15-L/R-500	30	60	25	60	25	500	40	30	8	2,5	2,5	23	7	0,99
12058	MKS30-TS16-L/R-100	30	90	32,5	90	32,5	100	70	35	32	2,5	3	36	0	0,52
12060	MKS30-TS16-L/R-200	30	90	32,5	90	32,5	200	70	35	32	2,5	3	36	0	0,67
12062	MKS30-TS16-L/R-300	30	90	32,5	90	32,5	300	70	35	32	2,5	3	36	0	0,87
12064	MKS30-TS16-L/R-400	30	90	32,5	90	32,5	400	70	35	32	2,5	3	36	0	1,04

Transport Paddle

Description	Part No.
MKSXX-XXXX-X-XXXX	see table

Type: paddle without side stop, with tube

Material: steel

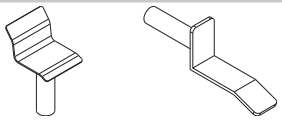

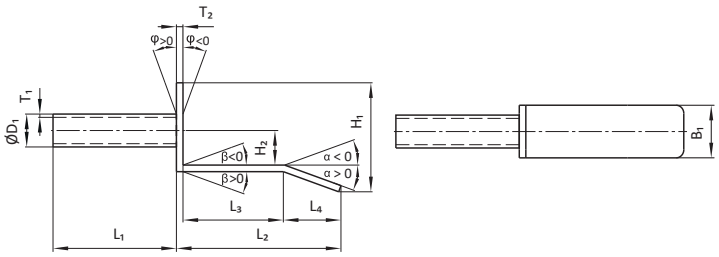

Part No.	Description	D_1 [mm]	H_1 [mm]	H_2 [mm]	B_1 [mm]	L_1 [mm]	L_2 [mm]	L_3 [mm]	L_4 [mm]	T_1 [mm]	T_2 [mm]	α [°]	β [°]	φ [°]	m [kg]
100780	MKS20-AB01-100-VA	20	64	20	56	100	43	40	19	2,5	2	30	8	25	0,18
102745	MKS20-AB02-100-VA	20	50	20	56	100	41	22	50	2,5	2	5	-25	35	0,20
102746	MKS20-AB04-100-VA	20	64	20	56	100	33	40	17	2,5	2	30	8	25	0,20
11384	MKS20-TS10-40-100	20	71	28,5	40	100	50	33	15	2,5	2,5	30	0	0	0,20
11386	MKS20-TS10-40-200	20	71	28,5	40	200	50	33	15	2,5	2,5	30	0	0	0,30
11388	MKS20-TS10-40-300	20	71	28,5	40	300	50	33	15	2,5	2,5	30	0	0	0,41
11390	MKS20-TS10-40-400	20	71	28,5	40	400	50	33	15	2,5	2,5	30	0	0	0,52
11512	MKS20-TS13-100	20	66	25	32	100	100	61	35	2	4	20	0	0	0,24
107652	MKS20-TS13-1-D300	20	61	25	32	300	69,5	46	20	2	4	20	0	0	0,39
11514	MKS20-TS13-200	20	66	25	32	200	100	61	35	2	4	20	0	0	0,34
11516	MKS20-TS13-300	20	66	25	32	300	100	61	35	2	4	20	0	0	0,42
11518	MKS20-TS13-400	20	66	25	32	400	100	61	35	2	4	20	0	0	0,50
11520	MKS20-TS13-500	20	66	25	32	500	100	61	35	2	4	20	0	0	0,58
105459	MKS20-TS13-A-D100	20	66	21	32	100	100	61	35	2,5	4	20	0	0	0,29
105460	MKS20-TS13-A-D200	20	66	21	32	200	100	61	35	2,5	4	20	0	0	0,34
105462	MKS20-TS13-A-D300	20	66	21	32	300	100	61	35	2,5	4	20	0	0	0,45
105463	MKS20-TS13-A-D400	20	66	21	32	400	100	61	35	2,5	4	20	0	0	0,50
107464	MKS20-TS13-A-D500	20	66	21	32	500	100	61	35	2,5	4	20	0	0	0,56
11533	MKS20-TS14-100	20	54	29	32	100	100	65	32	2	4	-20	0	0	0,24
11535	MKS20-TS14-200	20	54	29	32	200	100	65	32	2	4	-20	0	0	0,33
11537	MKS20-TS14-300	20	54	29	32	300	100	65	32	2	4	-20	0	0	0,42
11539	MKS20-TS14-400	20	54	29	32	400	100	65	32	2	4	-20	0	0	0,51
11541	MKS20-TS14-500	20	54	29	32	500	100	65	32	2	4	-20	0	0	0,60
100875	MKS25-AB01-100-VA	25	64	19	56	100	43	40	19	2,5	2	30	8	25	0,22
101437	MKS25-AB02-100-VA	25	50	19	56	100	41	22	50	2,5	2	5	-25	35	0,22
101436	MKS25-AB04-100-VA	25	64	19	56	100	33	40	17	2,5	2	30	8	25	0,20
16558	MKS25-TS10-40-100	25	72	24,5	40	100	60	24	33	2	3	28	0	0	0,23
16560	MKS25-TS10-40-200	25	72	24,5	40	200	60	24	33	2	3	28	0	0	0,34
16562	MKS25-TS10-40-300	25	72	24,5	40	300	60	24	33	2	3	28	0	0	0,45
16564	MKS25-TS10-40-400	25	72	24,5	40	400	60	24	33	2	3	28	0	0	0,57
11522	MKS25-TS13-100	25	66	25	32	100	100	61	35	2	4	20	0	0	0,26
11523	MKS25-TS13-150	25	66	25	32	150	100	61	35	2	4	20	0	0	0,32
11524	MKS25-TS13-200	25	66	25	32	200	100	61	35	2	4	20	0	0	0,38
11525	MKS25-TS13-250	25	66	25	32	250	100	61	35	2	4	20	0	0	0,43
11526	MKS25-TS13-300	25	66	25	32	300	100	61	35	2	4	20	0	0	0,49
11528	MKS25-TS13-400	25	66	25	32	400	100	61	35	2	4	20	0	0	0,60
11530	MKS25-TS13-500	25	66	25	32	500	100	61	35	2	4	20	0	0	0,72
101751	MKS25-TS13-A-D100	25	66	21	32	100	100	61	35	2,5	4	20	0	0	0,29
101752	MKS25-TS13-A-D200	25	66	21	32	200	100	61	35	2,5	4	20	0	0	0,43
101753	MKS25-TS13-A-D300	25	66	21	32	300	100	61	35	2,5	4	20	0	0	0,57
101754	MKS25-TS13-A-D400	25	66	21	32	400	100	61	35	2,5	4	20	0	0	0,71
11543	MKS25-TS14-100	25	54	29	32	100	100	65	35	2	4	-20	0	0	0,26
11545	MKS25-TS14-200	25	54	29	32	200	100	65	35	2	4	-20	0	0	0,38
11547	MKS25-TS14-300	25	54	29	32	300	100	65	35	2	4	-20	0	0	0,49
11549	MKS25-TS14-400	25	54	29	32	400	100	65	35	2	4	-20	0	0	0,61
11551	MKS25-TS14-500	25	54	29	32	500	100	65	35	2	4	-20	0	0	0,72
101755	MKS25-TS14-A-D100	25	58	29	32	100	100	61	35	2,5	4	-20	0	0	0,29
101756	MKS25-TS14-A-D200	25	58	29	32	200	100	61	35	2,5	4	-20	0	0	0,43
101757	MKS25-TS14-A-D300	25	58	29	32	300	100	61	35	2,5	4	-20	0	0	0,57
101758	MKS25-TS14-A-D400	25	58	29	32	400	100	61	35	2,5	4	-20	0	0	0,71
15504	MKS30-TS13-100	30	66	25	32	100	100	61	35	2	4	20	0	0	0,29
15506	MKS30-TS13-200	30	66	25	32	200	100	61	35	2	4	20	0	0	0,43
15508	MKS30-TS13-300	30	66	25	32	300	100	61	35	2	4	20	0	0	0,57

Technical changes and errors are subject to change without notice!
www.springer.group
Document Date: CW 12.2025

Transport Paddle

Part No.	Description	D_1 [mm]	H_1 [mm]	H_2 [mm]	B_1 [mm]	L_1 [mm]	L_2 [mm]	L_3 [mm]	L_4 [mm]	T_1 [mm]	T_2 [mm]	α [°]	β [°]	φ [°]	m [kg]
15510	MKS30-TS13-400	30	66	25	32	400	100	61	35	2	4	20	0	0	0,71
15512	MKS30-TS13-500	30	66	25	32	500	100	61	35	2	4	20	0	0	0,83
100009	MKS30-TS13-600	30	66	25	32	600	100	61	35	2	4	20	0	0	0,99
15514	MKS30-TS14-100	30	54	29	32	100	100	65	35	2	4	-20	0	0	0,29
15516	MKS30-TS14-200	30	54	29	32	200	100	65	35	2	4	-20	0	0	0,42
15518	MKS30-TS14-300	30	54	29	32	300	100	65	35	2	4	-20	0	0	0,56
15520	MKS30-TS14-400	30	54	29	32	400	100	65	35	2	4	-20	0	0	0,70
15522	MKS30-TS14-500	30	54	29	32	500	100	65	35	2	4	-20	0	0	0,83

Transport Paddle Accessories

Description	Part No.
MKS-TS11-L	11449

Type: paddle, weldable, with side stop, left

Material: steel

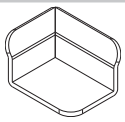

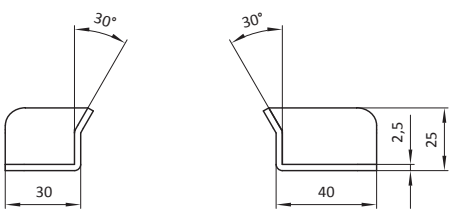

Part No.	Description	m [kg]
11449	MKS-TS11-L	0,05

Description	Part No.
MKS-TS11-R	11450

Type: paddle, weldable, with side stop, right

Material: steel

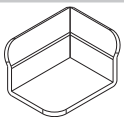

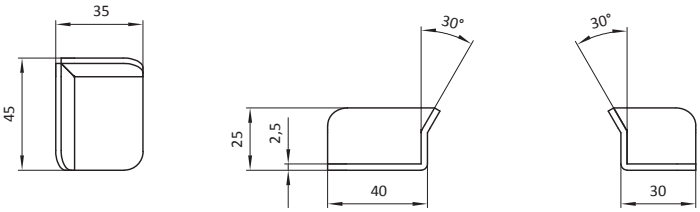

Part No.	Description	m [kg]
11450	MKS-TS11-R	0,05

Description	Part No.
MKS-ZTS01-XX	see table

Type: downholder for transport paddle

Material: steel

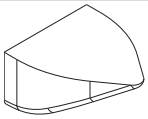

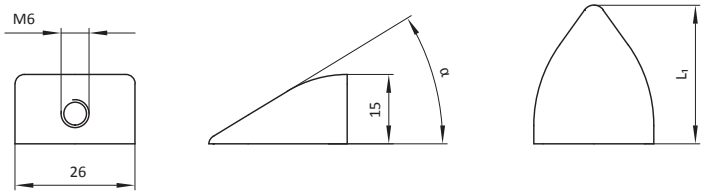

Part No.	Description	L_1 [mm]	α [°]	m [kg]
19628	MKS-ZTS01-30	30	31,3	0,05
19634	MKS-ZTS01-40	40	20,1	0,06

Support Point

Description	Part No.
MKS-ABB10-1-XX-XX	see table

Type: composite support point

Material: material mix

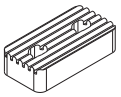

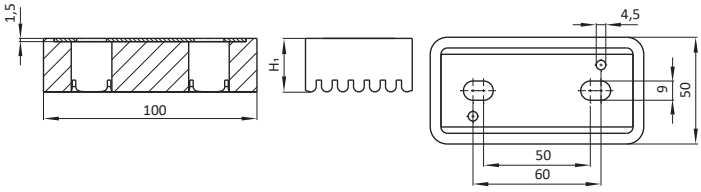

Part No.	Description	H_1 [mm]	Material (support point)	m [kg]
108161	MKS-ABB10-1-25-40	25	NBR, 40 Shore	0,12

Position Adapter

Description	Part No.
MKSXX-EW17-XXX	see table

Type: with tube, with pin

Material: steel

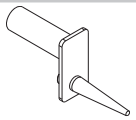

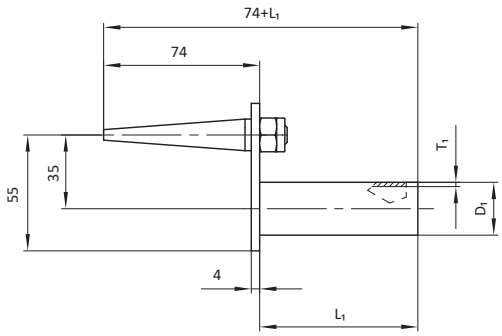

Part No.	Description	D_1 [mm]	L_1 [mm]	T_1 [mm]	m [kg]
101925	MKS20-EW17-200	20	200	3	0,40
102737	MKS25-EW17-100	25	100	2	0,26
102738	MKS25-EW17-200	25	200	2	0,37
102739	MKS25-EW17-300	25	300	2	0,48
102740	MKS25-EW17-400	25	400	2	0,60
101319	MKS30-EW17-100	30	100	2	0,28
101320	MKS30-EW17-200	30	200	2	0,42
101321	MKS30-EW17-300	30	300	2	0,56

Description	Part No.
MKS-AKU82-1	see table

Type: with ball

Material: steel

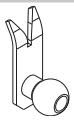

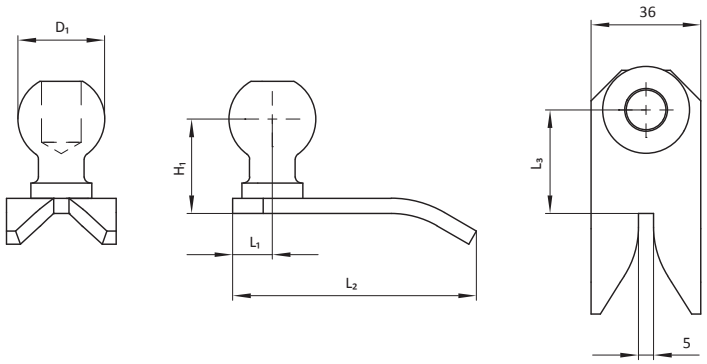

Part No.	Description	D_1 [mm]	H_1 [mm]	L_1 [mm]	L_2 [mm]	L_3 [mm]	m [kg]
101226	MKS-AKU82-1	28,5	26	13	80	34	0,19
100477	MKS-AKU82	36	29	25	105	47	0,32

Description	Part No.
MKS-EW18-XX	see table

Type: screw-on

Material: steel

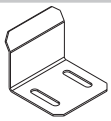

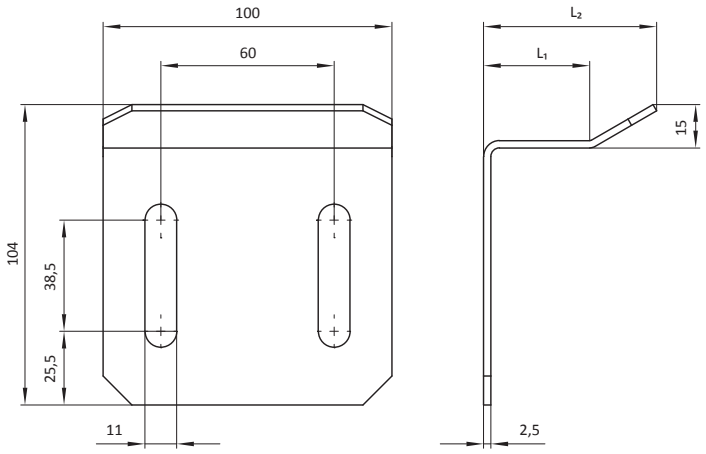

Part No.	Description	L_1 [mm]	L_2 [mm]	m [kg]
103536	MKS-EW18-37	37	60	0,27
103537	MKS-EW18-62	62	85	0,32

Magnet Mounting

Description	Part No.
MKS-HST09	101923

Type: for guiding pin

Material: material mix

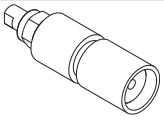

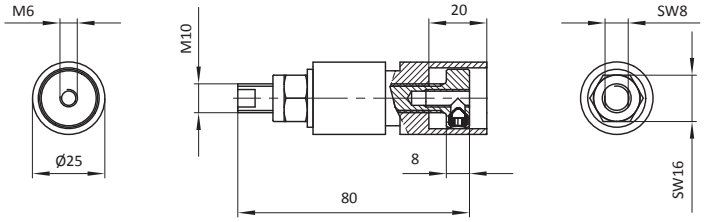

Part No.	Description	m [kg]
101923	MKS-HST09	0,09

Tube with Ball/Plate

Description	Part No.
MKS30-RA01-XXX	see table

Type: tube with plate

Material: steel

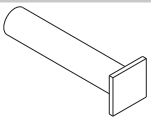

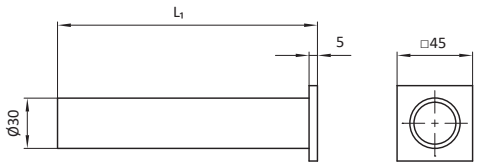

Part No.	Description	L_1 [mm]	m [kg]
10454	MKS30-RA01-075	75	0,20
10455	MKS30-RA01-100	100	0,24
10456	MKS30-RA01-125	125	0,28
10457	MKS30-RA01-150	150	0,33
10458	MKS30-RA01-200	200	0,41
10459	MKS30-RA01-250	250	0,50
10460	MKS30-RA01-300	300	0,58
10461	MKS30-RA01-350	350	0,66
10462	MKS30-RA01-400	400	0,75
10463	MKS30-RA01-450	450	0,83
10464	MKS30-RA01-500	500	0,92
10465	MKS30-RA01-550	550	1,00
10466	MKS30-RA01-600	600	1,27
102578	MKS30-RA01-1500	1500	2,61
107708	MKS30-RA01-1550	1550	2,70

Description	Part No.
MKSXX-RAX1-XXX	see table

Type: tube with plate

Material: steel

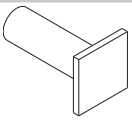

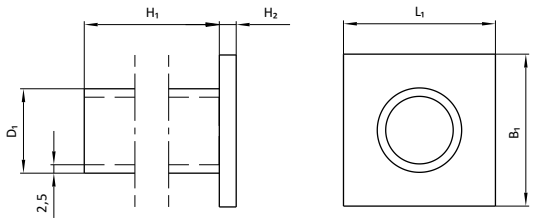

Part No.	Description	D_1 [mm]	H_1 [mm]	H_2 [mm]	B_1 [mm]	L_1 [mm]	m [kg]
10434	MKS20-RA01-300	20	300	5	35	35	0,37
10436	MKS20-RA01-400	20	400	5	35	35	0,48
10438	MKS20-RA01-500	20	500	5	35	35	0,58
10473	MKS20-RA11-300	20	300	20	35	35	0,52
10475	MKS20-RA11-400	20	400	20	35	35	0,62
10477	MKS20-RA11-500	20	500	20	35	35	0,73
10447	MKS25-RA01-300	25	300	5	40	40	0,47
10449	MKS25-RA01-400	25	400	5	40	40	0,61
10451	MKS25-RA01-500	25	500	5	40	40	0,75
10486	MKS25-RA11-300	25	300	20	40	40	0,67
10488	MKS25-RA11-400	25	400	20	40	40	0,81
10490	MKS25-RA11-500	25	500	20	40	40	0,95
10460	MKS30-RA01-300	30	300	5	45	45	0,59
10462	MKS30-RA01-400	30	400	5	45	45	0,76
10464	MKS30-RA01-500	30	500	5	45	45	0,93
10500	MKS30-RA11-300	30	300	20	45	45	0,83
10502	MKS30-RA11-400	30	400	20	45	45	1,00
10504	MKS30-RA11-500	30	500	20	45	45	1,17

Description	Part No.
MKS25-RKU0X-XXX	see table

Type: tube with ball

Material: steel

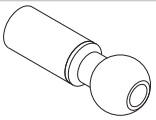

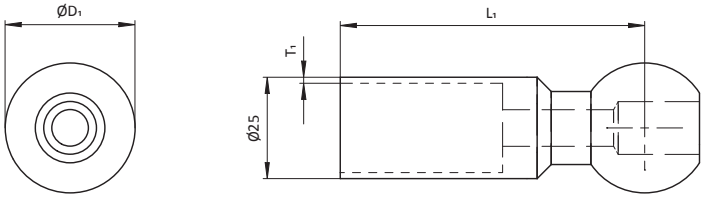

Part No.	Description	D_1 [mm]	L_1 [mm]	T_1 [mm]	m [kg]
101716	MKS25-RKU02-C100	28,5	100	2	0,19
101718	MKS25-RKU02-C200	28,5	200	2	0,31
101720	MKS25-RKU02-C300	28,5	300	2	0,42
101722	MKS25-RKU02-C400	28,5	400	2	0,53
12070	MKS25-RKU01-075	32	75	1,5	0,19
12071	MKS25-RKU01-100	32	100	1,5	0,21
12073	MKS25-RKU01-200	32	200	1,5	0,29
12075	MKS25-RKU01-300	32	300	1,5	0,38
12077	MKS25-RKU01-400	32	400	1,5	0,47
106310	MKS25-RKU01-450	32	450	1,5	0,51

Ball/Rod Journal with Weld-On Plate

Description	Part No.
MKS-AKUXX-X	see table

Type: for paddle, weld-on mounting with ball

Material: steel

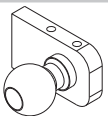

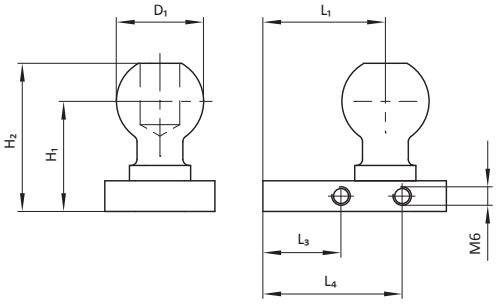

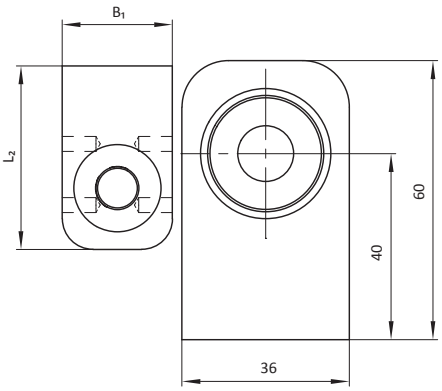

Part No.	Description	D_1 [mm]	H_1 [mm]	H_2 [mm]	B_1 [mm]	L_1 [mm]	L_2 [mm]	L_3 [mm]	L_4 [mm]	m [kg]
100995	MKS-AKU55-1	28,5	36	48,4	36	40	60	25,5	45,5	0,25
15821	MKS-AKU53	28,5	36	48,4	25	35	47	-	-	0,17
12232	MKS-AKU14	32	39	52,5	36	40	60	-	-	0,29
16009	MKS-AKU55	36	39	54	36	40	60	-	-	0,36

Description	Part No.
MKS-AW39-X	see table

Type: for paddle, weld-on mounting with rod journal

Material: steel

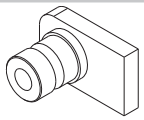

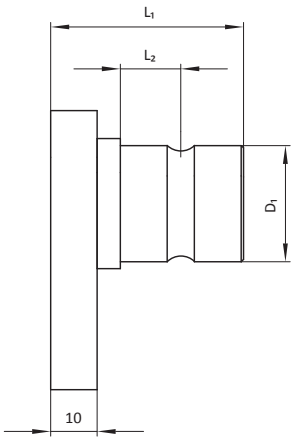

Part No.	Description	D_1 [mm]	L_1 [mm]	L_2 [mm]	m [kg]
101945	MKS-AW39-1	20	36,5	10,5	0,22
101944	MKS-AW39	25	41,5	13	0,25

Description	Part No.
MKS-AW11-L	10513

Type: with rod journal, with flange, left

Material: steel

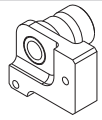

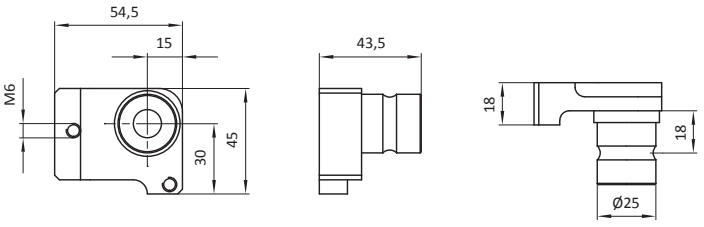

Part No.	Description	m [kg]
10513	MKS-AW11-L	0,26

Description	Part No.
MKS-AW11-R	10512

Type: with rod journal, with flange, right

Material: steel

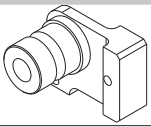

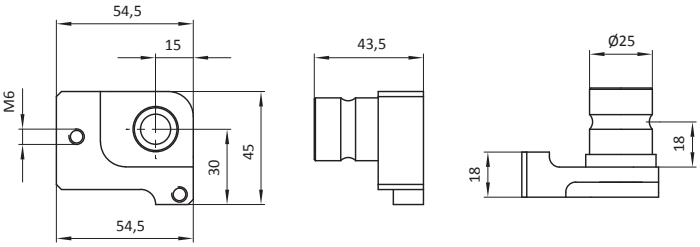

Part No.	Description	m [kg]
10512	MKS-AW11-R	0,26

Description	Part No.
MKS-AKU11-R-LB	103506

Type: for transport paddle, mounting right

Material: steel

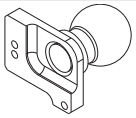

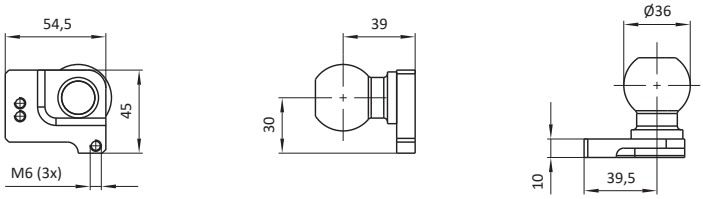

Part No.	Description	m [kg]
103506	MKS-AKU11-R-LB	0,33

Description	Part No.
MKS-AKU11-L-LB	103505

Type: for transport paddle, mounting left

Material: steel

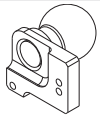

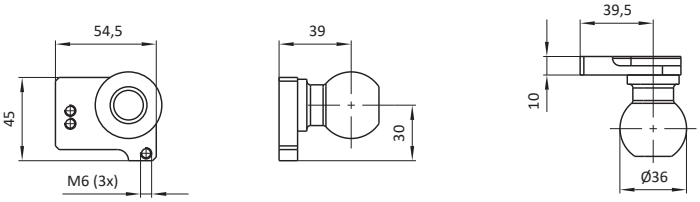

Part No.	Description	m [kg]
103505	MKS-AKU11-L-LB	0,33

Ball with Plate/Angle/Thread

Description	Part No.
MKS-AKU02	10415

Type: with ball, with weld-on angle

Material: steel

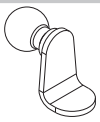

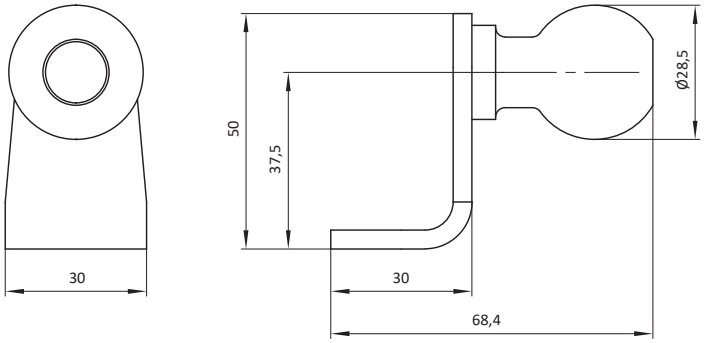

Part No.	Description	m [kg]
10415	MKS-AKU02	0,16

Description	Part No.
MKS-AKU48-1	16569

Type: with ball, with flange

Material: steel

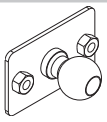

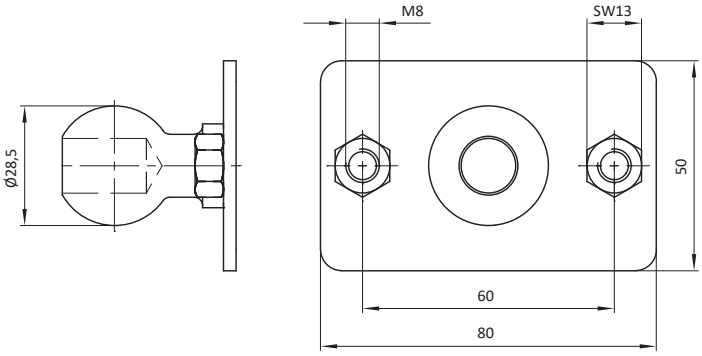

Part No.	Description	m [kg]
16569	MKS-AKU48-1	0,20

Description	Part No.
MKS-AKUXX	see table

Type: with ball, with flange

Material: steel

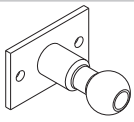

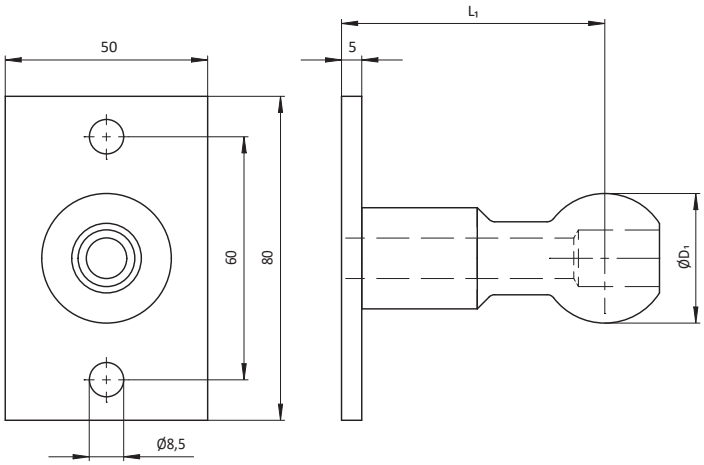

Part No.	Description	D_1 [mm]	L_1 [mm]	m [kg]
15657	MKS-AKU48	28,5	45	0,27
12512	MKS-AKU17	32	65	0,37
15141	MKS-AKU37	36	65	0,43

Description	Part No.
MKS-AKU24	12880

Type: with ball, with flange 90°

Material: steel



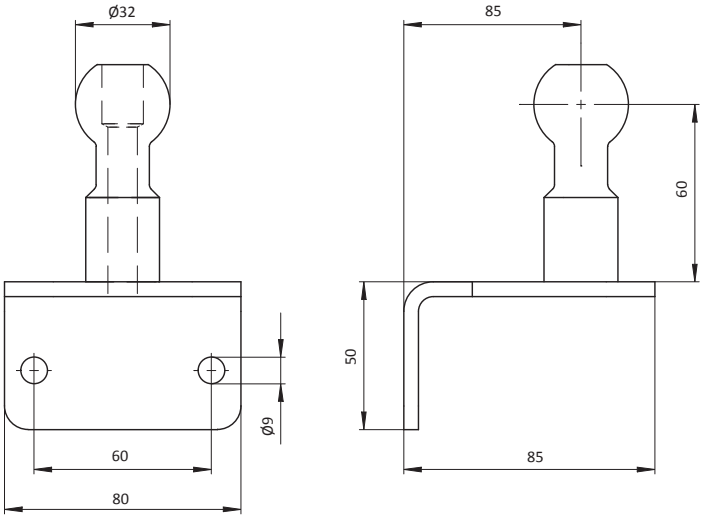

Part No.	Description	m [kg]
12880	MKS-AKU24	0,55

Ball with Plate/Angle/Thread

Description	Part No.
MKS-AKU19	12516

Type: ball and external thread

Material: steel

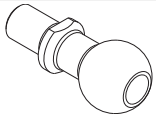

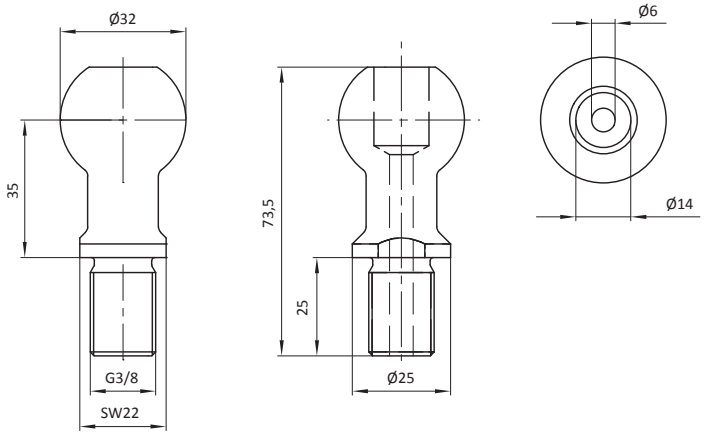

Part No.	Description	m [kg]
12516	MKS-AKU19	0,07

Description	Part No.
MKS-AKU50	15711

Type: ball with external thread, angled

Material: steel



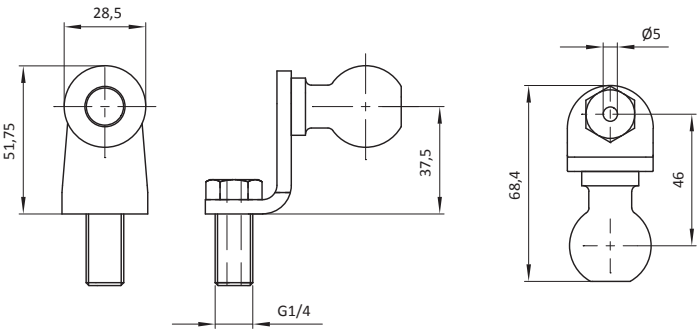

Part No.	Description	m [kg]
15711	MKS-AKU50	0,20

Description	Part No.
MKS-AKU102-XXX	see table

Type: extended adapter with ball

Material: aluminium

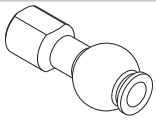

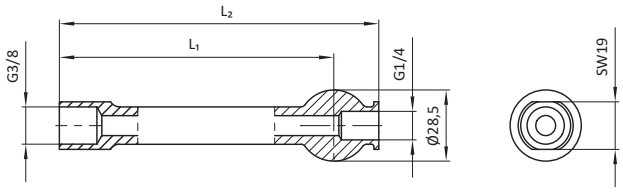

Part No.	Description	L_1 [mm]	L_2 [mm]	m [kg]
108175	MKS-AKU102-50	50	68	0,05
108176	MKS-AKU102-110	110	128	0,05

8. Jaw Gripper, Magnet Gripper and Accessories

Index

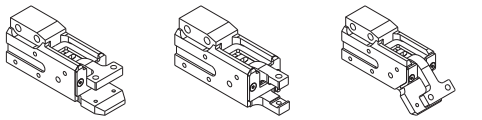
Jaw Gripper 215

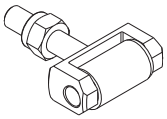
Accessories for Jaw Gripper 227

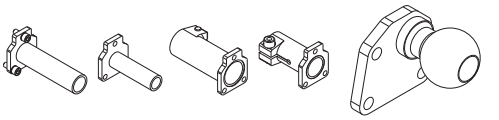
Gripper Mounting (Jaw Gripper) 229

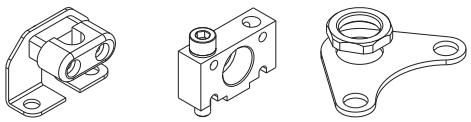
Strain Relief (Jaw Gripper) 232

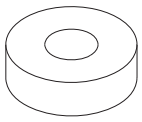
Open Angle Limiter (Jaw Gripper) 233

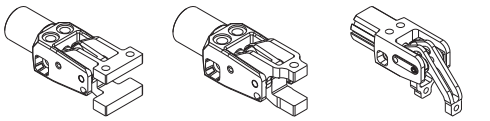
Jaw Gripper - compact type 234

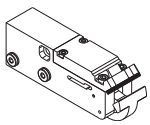
Sliding Link Gripper 244

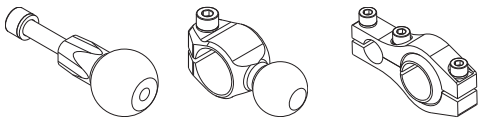
Gripper Mounting (Jaw Gripper - compact type & Sliding Link Gripper) 246

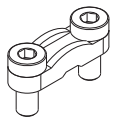
Strain Relief 248

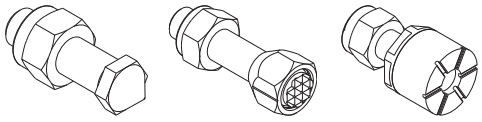
Clamping Screw 249

Technical changes and errors are subject to change without notice!
www.springer.group
Document Date: CW 16.2025

8. Jaw Gripper, Magnet Gripper and Accessories

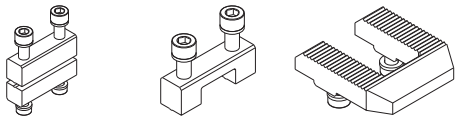

Jaw Plate **251**



Spacer Plate **254**

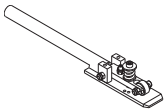

Jaw Gripper Manual (spring pre-loaded) **255**

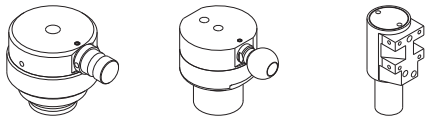

Magnet Gripper **256**

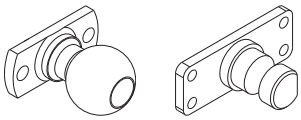

Gripper Mounting (Magnet Gripper) **258**

Jaw Gripper

Description	Part No.
MKS-KGSP12-XX-X-XX-X-XX	see table

Type: clamping orientation 0°, for clamping screw, clamping lever arm, ground plate without lead-in chamfer, ports (P) G1/8

Material: body: aluminium; clamping lever arm: steel; ground plate: steel; seals: NBR

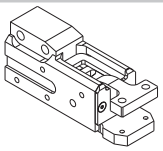

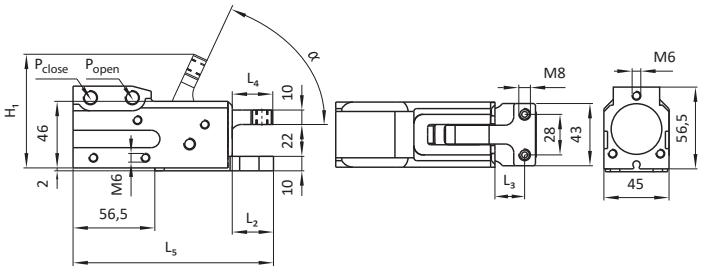

Part No.	Description	H_1 [mm]	L_2 [mm]	L_3 [mm]	L_4 [mm]	L_5 [mm]	α [°]	Clamping force [N]	m [kg]
100611	MKS-KGSP12-00-0-K	78,6	28,5	20,5	28	138,5	65	650	1,01
102479	MKS-KGSP12-00-0-K-M [1]	80,5	28,5	20,5	28	144,5	65	650	0,85
104056	MKS-KGSP12-OS-00-0-K [2]	80,5	28,5	20,5	28	138,5	65	650	1,01
106218	MKS-KGSP12-00-0-35-K-20°	63,3	43	35	42,5	153	20	560	1,03
101322	MKS-KGSP12-00-0-50-K-20°	68,4	58	50	57,5	168	20	470	1,06
104055	MKS-KGSP12-OS-00-0-50-K-20° [2]	70,4	58	50	57,5	168	20	470	1,06
104665	MKS-KGSP12-00-0-60-K-20°	71,8	68	60	67,5	178	20	420	1,14
104666	MKS-KGSP12-00-0-76-K-20°	77,5	84,5	76,5	84	194,5	20	250	1,23

[1] end position query piston position [2] end position without self locking

Description	Part No.
MKS-KGSP12-XX-X-XX-X-XX	see table

Type: clamping orientation 0°, for clamping screw, clamping lever arm, ground plate with lead-in chamfer, ports (P) G1/8

Material: body: aluminium; clamping lever arm: steel; ground plate: steel; seals: NBR

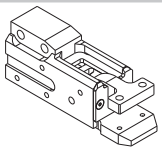

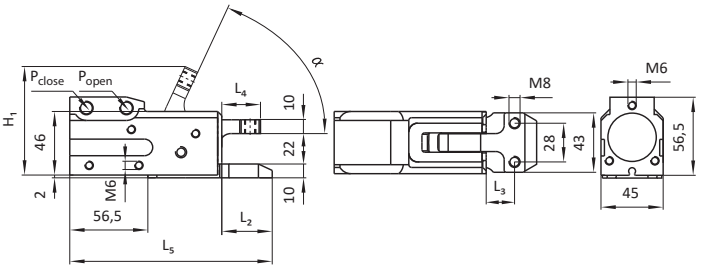

Part No.	Description	H_1 [mm]	L_2 [mm]	L_3 [mm]	L_4 [mm]	L_5 [mm]	α [°]	Clamping force [N]	m [kg]
103624	MKS-KGSP12-00-0-30°	65,7	36,5	20,5	28	146,5	30	650	0,97
16470	MKS-KGSP12-00-0	78,6	36,5	20,5	28	146,5	65	650	0,97
105274	MKS-KGSP12-00-0-M [1]	80,5	36,5	20,5	28	152,5	65	650	1,13
100578	MKS-KGSP12-OS-00-0 [2]	80,5	36,5	20,5	28	146,5	65	650	0,97
101966	MKS-KGSP12-00-0-35-20°	63,3	51	35	42,5	161	20	560	1,03
102147	MKS-KGSP12-00-0-35-30°	72,9	51	35	42,5	161	30	560	1,03
101291	MKS-KGSP12-00-0-50-20°	68,4	66	50	57,5	176	20	470	1,1
103317	MKS-KGSP12-00-0-60-20°	71,8	76	60	67,5	186	20	420	1,14
107694	MKS-KGSP12-00-0-60-30°	85	76	60	67,5	186	30	420	1,14
103647	MKS-KGSP12-00-0-76-10°	59,4	92,5	76,5	84	202,5	10	250	1,22
103318	MKS-KGSP12-00-0-76-20°	77,5	98,5	76,5	84	208,5	20	250	1,22

[1] end position query piston position [2] end position without self locking

Description	Part No.
MKS-KGSP10-XX-X-XX-X-XX	see table

Type: clamping orientation 0°, for clamping screw, clamping lever arm, ground plate with lead-in chamfer, sensor mounting for IDS02, ports (P) G1/8

Material: body: aluminium; clamping lever arm: steel; ground plate: steel; seals: NBR

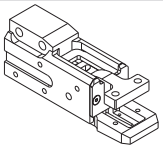

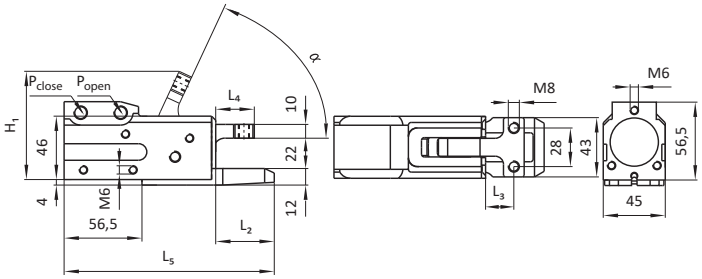

Part No.	Description	H_1 [mm]	L_2 [mm]	L_3 [mm]	L_4 [mm]	L_5 [mm]	α [°]	Clamping force [N]	m [kg]
103544	MKS-KGSP10-00-0-10°	49,7	42,5	20,5	28	152,5	10	650	0,96
103545	MKS-KGSP10-00-0-15°	54,1	42,5	20,5	28	152,5	15	650	0,96
103546	MKS-KGSP10-00-0-20°	58,3	42,5	20,5	28	152,5	20	650	0,96
103547	MKS-KGSP10-00-0-30°	65,7	42,5	20,5	28	152,5	30	650	0,96
16468	MKS-KGSP10-00-0	78,6	42,5	20,5	28	152,5	65	650	0,96
19954	MKS-KGSP10-00-0-M [1]	82,5	42,5	20,5	28	116	65	650	0,96
17591	MKS-KGSP10-OS-00-0 [2]	82,5	42,5	20,5	28	110	65	650	0,95
103307	MKS-KGSP10-00-0-35-20°	63,3	57	35	42,5	167	20	560	1,02
103308	MKS-KGSP10-00-0-50-20°	68,4	72	50	57,5	182	20	470	1,06
103309	MKS-KGSP10-00-0-60-20°	71,8	82	60	67,5	192	20	420	1,15
107693	MKS-KGSP10-00-0-60-30°	85	82	60	67,5	192	20	420	1,15
16961	MKS-KGSP10-00-0-76-20°	77,5	98,5	76,5	84	208,5	20	250	1,22

[1] end position query piston position [2] end position without self locking

Description	Part No.
MKS-KGSP10-00-0-XX-X-XX	see table

Type: clamping orientation 0°, for clamping screw, clamping lever arm, ground plate without lead-in chamfer, sensor mounting for IDS02, ports (P) G1/8

Material: body: aluminium; clamping lever arm: steel; ground plate: steel; seals: NBR

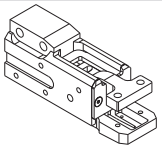

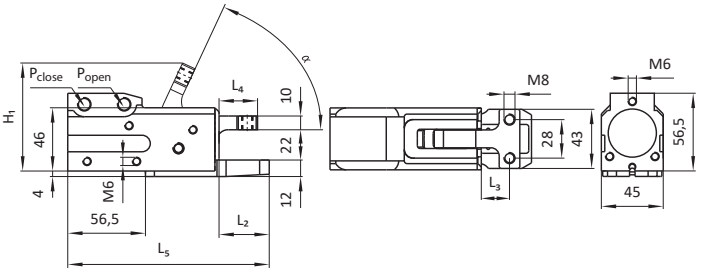

Part No.	Description	H_1 [mm]	L_2 [mm]	L_3 [mm]	L_4 [mm]	L_5 [mm]	α [°]	Clamping force [N]	m [kg]
103571	MKS-KGSP10-00-0-K-30°	65,7	36,5	20,5	28	146,5	30	650	0,94
18143	MKS-KGSP10-00-0-K	78,6	36,5	20,5	28	146,5	65	650	0,94
102477	MKS-KGSP10-00-0-K-M [1]	82,5	36,5	20,5	28	152,5	65	650	0,93
104129	MKS-KGSP10-00-0-35-K-20°	63,3	51	35	42,5	161	20	560	1,03
104659	MKS-KGSP10-00-0-60-K-20	71,8	75	60	67,5	185	20	420	1,14
104449	MKS-KGSP10-00-0-76-K-20°	77,5	91,5	76,5	84	201,5	20	250	1,23

[1] end position query piston position

Technical changes and errors are subject to change without notice!
www.springer.group
Document Date: CW 16.2025

Jaw Gripper

Description	Part No.
MKS-KGSP15-00-0	19668

Type: clamping orientation 0°, for clamping screw, clamping lever arm, short ground plate without lead-in chamfer, sensor mounting for IDS02, ports (P) G1/8

Material: body: aluminium; clamping lever arm: steel; ground plate: steel; seals: NBR

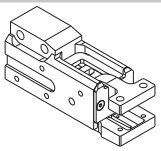

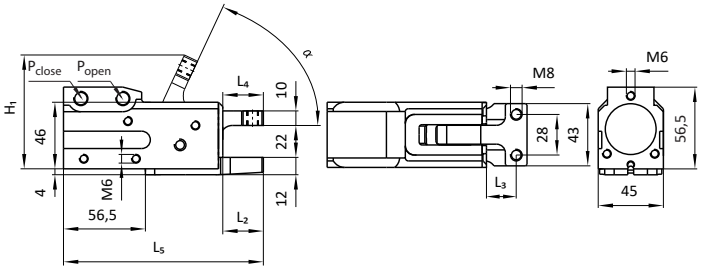

Part No.	Description	H_1 [mm]	L_2 [mm]	L_3 [mm]	L_4 [mm]	L_5 [mm]	α [°]	Clamping force [N]	m [kg]
19668	MKS-KGSP15-00-0	78,6	28	20,5	28	138	65	650	0,91

Description	Part No.
MKS-KGSP14-XX-X-XX-X-XX	see table

Type: clamping orientation 0°, for clamping screw, clamping lever arm, sensor mounting for IDS02, with / without lead-in chamfer [Pos. 1], ports (P) G1/8

Material: body: aluminium; clamping lever arm: steel; ground plate: steel; seals: NBR

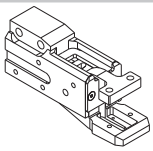

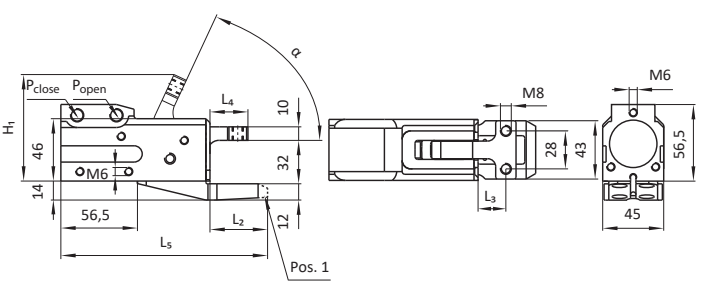

Part No.	Description	H_1 [mm]	L_2 [mm]	L_3 [mm]	L_4 [mm]	L_5 [mm]	α [°]	Clamping force [N]	m [kg]	Pos. 1
19669	MKS-KGSP14-00-0	78,6	42,5	20,5	28	152,5	65	650	1,01	yes
100185	MKS-KGSP14-OS-00-0 [2]	92,5	42,5	20,5	28	152,5	65	650	1,02	yes
104435	MKS-KGSP14-00-0-K	78,6	36,5	21	28	146,5	65	650	0,98	no
104156	MKS-KGSP14-00-0-60-K-20°	85,3	76	60	67,5	186	20	420	1,13	no
104268	MKS-KGSP14-00-0-76-K-20°	91,4	92,5	76,5	84	202,5	20	250	1,20	no
102269	MKS-KGSP14-00-0-76-20°	91,4	98,5	76,5	84	208,5	20	250	1,20	no

[2] end position without self locking

Description	Part No.
MKS-KGSP18-00-0-XX-XX	see table

Type: clamping orientation 0°, for clamping screw, clamping lever arm, ground plate with lead-in chamfer, sensor mounting for IDS19, ports (P) G1/8

Material: body: aluminium; clamping lever arm: steel; ground plate: steel; seals: NBR

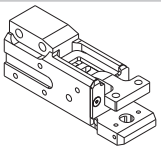

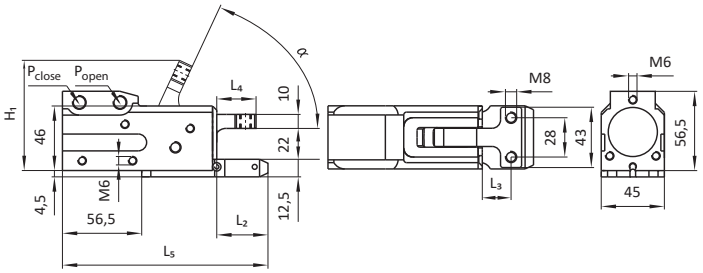

Part No.	Description	H_1 [mm]	L_2 [mm]	L_3 [mm]	L_4 [mm]	L_5 [mm]	α [°]	Clamping force [N]	m [kg]
101986	MKS-KGSP18-00-0	78,6	36,5	20,5	28	146,5	65	650	0,99
104674	MKS-KGSP18-00-0-60-20	76,3	76	60	67,5	186	20	420	1,21

Description	Part No.
MKS-KGSP12-XX-X-XX-X-XX	see table

Type: clamping orientation 0°, for jaw plate, clamping lever arm, ground plate without lead-in chamfer, ports (P) G1/8

Material: body: aluminium; clamping lever arm: steel; ground plate: steel; seals: NBR

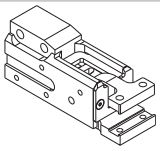

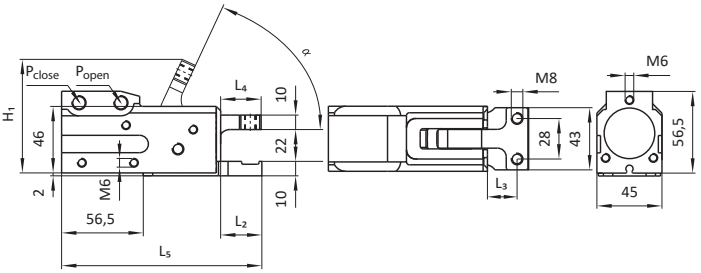

Part No.	Description	H_1 [mm]	L_2 [mm]	L_3 [mm]	L_4 [mm]	L_5 [mm]	α [°]	Clamping force [N]	m [kg]
103655	MKS-KGSP12-00-A-20°	58,3	28,5	20,5	28	138,5	20	650	0,92
16722	MKS-KGSP12-00-A	78,6	28,5	20,5	28	138,5	65	650	0,92
102705	MKS-KGSP12-00-A-M [1]	80,5	28,5	20,5	28	114,5	65	650	0,93
104381	MKS-KGSP12-OS-00-A [2]	80,5	28,5	20,5	28	138,5	65	650	0,93
101967	MKS-KGSP12-00-A-35-20°	63,3	43	35	42,5	153	20	560	0,99
103319	MKS-KGSP12-00-A-50-20°	68,4	58	50	57,5	168	20	470	1,08
103320	MKS-KGSP12-00-A-60-20°	71,8	68	60	67,5	178	20	420	1,09
107711	MKS-KGSP12-OS-00-A-60-20° [2]	71,8	68	60	67,5	178	20	420	1,09
103321	MKS-KGSP12-00-A-76-20°	77,5	84,5	76,5	84	194,5	20	250	1,17

[1] end position query piston position [2] end position without self locking

Jaw Gripper

Description	Part No.
MKS-KGSP10-XX-X-XX-X-XX	see table

Type: clamping orientation 0°, for jaw platen, clamping lever arm, ground plate without lead-in chamfer, sensor mounting for IDS02, ports (P) G1/8

Material: body: aluminium; clamping lever arm: steel; ground plate: steel; seals: NBR

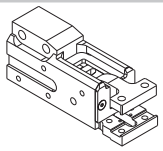

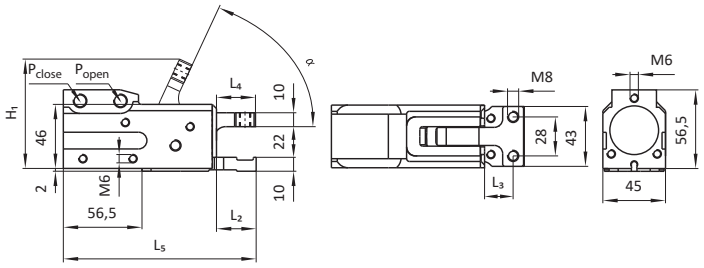

Part No.	Description	H_1 [mm]	L_2 [mm]	L_3 [mm]	L_4 [mm]	L_5 [mm]	α [°]	Clamping force [N]	m [kg]
103599	MKS-KGSP10-00-A-20°	58,3	28,5	20,5	28	138,5	20	650	0,88
103600	MKS-KGSP10-00-A-30°	65,7	28,5	20,5	28	138,5	30	650	0,88
16720	MKS-KGSP10-00-A	78,6	28,5	20,5	28	138,5	65	650	0,88
102706	MKS-KGSP10-00-A-M [1]	80,5	28,5	20,5	28	144,5	65	650	0,89
104367	MKS-KGSP10-OS-00-A [2]	78,6	28,5	20,5	28	138,5	65	650	0,88
103311	MKS-KGSP10-00-A-35-20°	63,3	43	35	42,5	153	20	560	0,97
103312	MKS-KGSP10-00-A-50-20°	68,4	58	50	57,5	168	20	470	0,97
103313	MKS-KGSP10-00-A-60-20°	71,8	68	60	67,5	178	20	420	1,06
104447	MKS-KGSP10-00-A-60-45°	94,7	68	60	67,5	178	45	420	1,06
103314	MKS-KGSP10-00-A-76-20°	77,5	84,5	76,5	84	194,5	20	250	1,11
104053	MKS-KGSP10-OS-00-A-76-20° [2]	79,4	84,5	76,5	84	194,5	20	250	1,13

[1] end position query piston position [2] end position without self locking

Description	Part No.
MKS-KGSP11-00-X-XX-X-XX	see table

Type: clamping orientation 0°, for clamping screw, clamping lever arm narrow, ports (P) G1/8

Material: body: aluminium; clamping lever arm: steel; ground plate: steel; seals: NBR

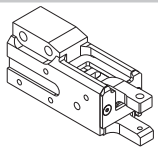

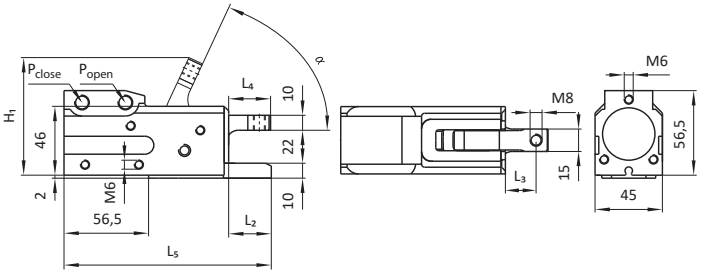

Part No.	Description	H_1 [mm]	L_2 [mm]	L_3 [mm]	L_4 [mm]	L_5 [mm]	α [°]	Clamping force [N]	m [kg]
103759	MKS-KGSP11-00-0-K-10°	49,7	28,5	20,5	28	138,5	10	650	0,85
103762	MKS-KGSP11-00-0-K-30°	65,7	28,5	20,5	28	138,5	30	650	0,85
100231	MKS-KGSP11-00-0-K	78,6	28,5	20,5	28	138,5	65	650	0,85
103043	MKS-KGSP11-00-0-35-K-20	63,3	43	35	42,5	153	20	560	0,86
103753	MKS-KGSP11-00-0-50-K-10°	54,8	58	50	57,5	168	10	470	0,92
103044	MKS-KGSP11-00-0-50-K-20	68,4	58	50	57,5	168	20	470	0,92
103756	MKS-KGSP11-00-0-60-K-15°	64,4	68	60	67,5	178	15	420	0,94
103045	MKS-KGSP11-00-0-60-K-20	71,8	68	60	67,5	178	20	420	0,94
103758	MKS-KGSP11-00-0-76-K-15°	68,6	84,5	76,5	84	194,5	15	250	0,98
103046	MKS-KGSP11-00-0-76-K-20	77,5	84,5	76,5	84	194,5	20	250	0,98

Description	Part No.
MKS-KGSP11-XX-X-XX-X-XX	see table

Type: clamping orientation 0°, for clamping screw, clamping lever arm narrow, ground plate with lead-in chamfer, ports (P) G1/8

Material: body: aluminium; clamping lever arm: steel; ground plate: steel; seals: NBR

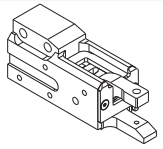

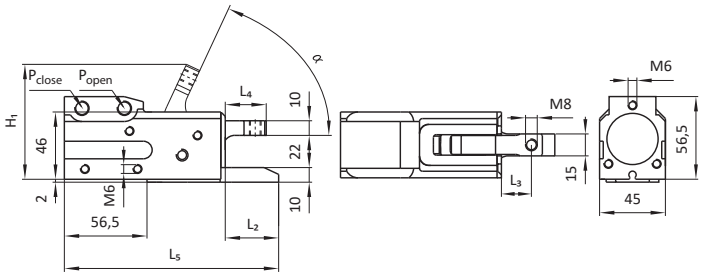

Part No.	Description	H_1 [mm]	L_2 [mm]	L_3 [mm]	L_4 [mm]	L_5 [mm]	α [°]	Clamping force [N]	m [kg]
16469	MKS-KGSP11-00-0	80,6	36,5	20,5	28	146,5	65	650	0,86
102478	MKS-KGSP11-00-0-M [1]	80,6	36,5	20,5	28	152,5	65	650	0,87
100577	MKS-KGSP11-OS-00-0 [2]	80,6	36,5	20,5	28	146,5	65	650	0,88
108041	MKS-KGSP11-00-0-35	91,7	51	35	42,5	161	20	560	0,91
101964	MKS-KGSP11-00-0-35-20°	63,3	51	35	42,5	161	20	560	0,91
102146	MKS-KGSP11-00-0-35-30°	72,9	51	35	42,5	161	30	560	0,91
103039	MKS-KGSP11-00-0-50-20°	68,4	66	50	57,5	176	20	470	0,92
100246	MKS-KGSP11-00-0-60-20°	71,8	76	60	67,5	186	20	420	0,95
104054	MKS-KGSP11-OS-00-0-60-20° [2]	73,8	76	60	67,5	186	20	420	1,02
103040	MKS-KGSP11-00-0-76-20	77,4	98,5	76,5	84	208,5	20	250	0,98

[1] end position query piston position [2] end position without self locking

Description	Part No.
MKS-KGSP17-00-0-XX-XX	see table

Type: clamping orientation 0°, for clamping screw, clamping lever arm narrow, recessed ground plate with lead-in chamfer, ports (P) G1/8

Material: body: aluminium; clamping lever arm: steel; ground plate: steel; seals: NBR

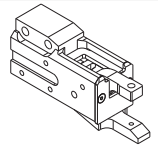

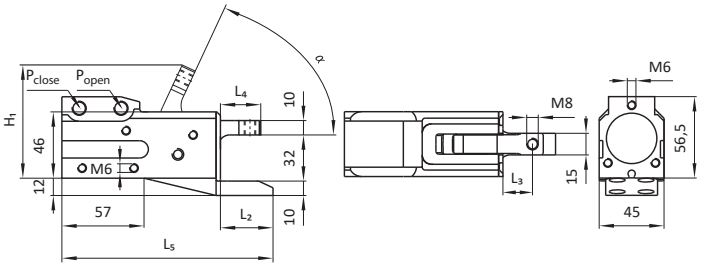

Part No.	Description	H_1 [mm]	L_2 [mm]	L_3 [mm]	L_4 [mm]	L_5 [mm]	α [°]	Clamping force [N]	m [kg]
100654	MKS-KGSP17-00-0	90,5	36,5	20,5	28	146,5	65	650	0,92
106619	MKS-KGSP17-00-0-60-20°	83,8	76	60	67,5	186	20	420	0,95

Technical changes and errors are subject to change without notice!
www.springer.group
Document Date: CW 16.2025

Jaw Gripper

Description	Part No.
MKS-KGSP19-XX-X-XX-X-XX	see table

Type: clamping orientation 0°, for clamping screw, clamping lever arm narrow, short ground plate without lead-in chamfer, sensor mounting for IDS19, ports (P) G1/8

Material: body: aluminium
clamping lever arm: steel
ground plate: steel
seals: NBR

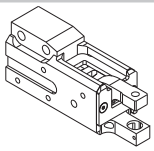

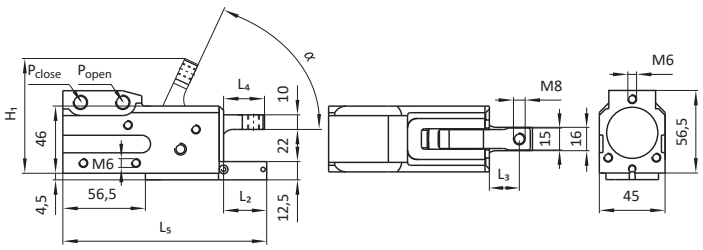

Part No.	Description	H_1 [mm]	L_2 [mm]	L_3 [mm]	L_4 [mm]	L_5 [mm]	α [°]	Clamping force [N]	m [kg]
103711	MKS-KGSP19-00-0-K-10°	49,7	29,5	20,5	28	139,5	10	650	0,85
103822	MKS-KGSP19-00-0-M-20° [1]	62,7	36,5	20,5	28	152,5	20	650	1,02
103714	MKS-KGSP19-00-0-K-30°	65,7	29,5	20,5	28	139,5	30	650	0,85
101980	MKS-KGSP19-00-0-K	78,6	29,5	20,5	28	139,5	65	650	0,85
102480	MKS-KGSP19-00-0-M [1]	83	36,5	20,5	28	152,5	65	650	1,02
103047	MKS-KGSP19-00-0-35-K-20	63,3	44	35	42,5	154	20	560	0,89
103705	MKS-KGSP19-00-0-50-K-10°	54,8	59	50	57,5	169	10	470	0,93
103048	MKS-KGSP19-00-0-50-K-20°	68,4	59	50	57,5	169	20	470	0,93
103708	MKS-KGSP19-00-0-60-K-15°	64,4	69	60	67,5	179	15	420	0,96
103049	MKS-KGSP19-00-0-60-K-20	71,8	69	60	67,5	179	20	420	0,96
103710	MKS-KGSP19-00-0-76-K-15°	68,6	85,5	76,5	84	195,5	15	250	0,99
103050	MKS-KGSP19-00-0-76-K-20	77,5	85,5	76,5	84	195,5	20	250	0,99

[1] end position query piston position

Description	Part No.
MKS-KGSP19-00-X-XX-X-XX	see table

Type: clamping orientation 0°, for clamping screw, clamping lever arm narrow, short ground plate with lead-in chamfer, sensor mounting for IDS19, ports (P) G1/8

Material: body: aluminium
clamping lever arm: steel
ground plate: steel
seals: NBR

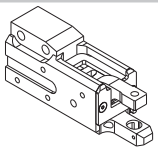

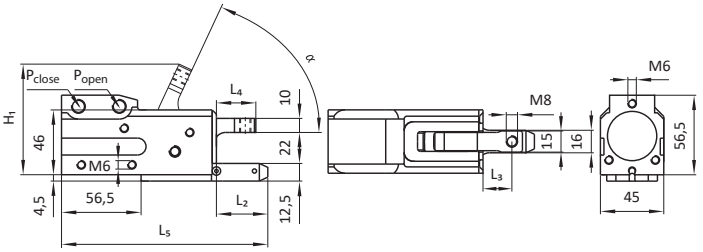

Part No.	Description	H_1 [mm]	L_2 [mm]	L_3 [mm]	L_4 [mm]	L_5 [mm]	α [°]	Clamping force [N]	m [kg]
103679	MKS-KGSP19-00-0-10°	49,7	36,5	20,5	28	146,5	10	650	0,86
103680	MKS-KGSP19-00-0-15°	54,1	36,5	20,5	28	146,5	15	650	0,86
103681	MKS-KGSP19-00-0-20°	58,3	36,5	20,5	28	146,5	20	650	0,86
103682	MKS-KGSP19-00-0-30°	65,7	36,5	20,5	28	146,5	30	650	0,86
101979	MKS-KGSP19-00-0	78,6	36,5	20,5	28	146,5	65	650	0,86
104390	MKS-KGSP19-OS-00-0 [2]	83	36,5	20,5	28	146,5	65	650	0,86
103041	MKS-KGSP19-00-0-35-20	63,3	51	35	42,5	161	20	560	0,91
103042	MKS-KGSP19-00-0-50-20	68,4	66	50	57,5	176	20	470	0,94
103699	MKS-KGSP19-00-0-60-10°	61,0	76	60	67,5	186	10	420	0,96
103700	MKS-KGSP19-00-0-60-15°	64,4	76	60	67,5	186	15	420	0,96
101981	MKS-KGSP19-00-0-60-20°	71,8	76	60	67,5	186	20	420	0,96
104388	MKS-KGSP19-OS-00-0-60-20° [2]	76,3	76	60	67,5	186	20	420	1,12
101982	MKS-KGSP19-00-0-76-20°	77,5	92,5	76,5	84	202,5	20	250	1,01
104389	MKS-KGSP19-OS-00-0-76-20° [2]	77,5	92,5	76,5	84	202,5	20	250	1,01
106863	MKS-KGSP19-00-0-90-15°	76,5	106	90	97	216	15	220	1,2

[2] end position without self locking

Description	Part No.
MKS-KGSP11-XX-X-XX-X-XX	see table

Type: clamping orientation 0°, for jaw plate, clamping lever arm narrow, ground plate without lead-in chamfer, ports (P) G1/8

Material: body: aluminium
clamping lever arm: steel
ground plate: steel
seals: NBR

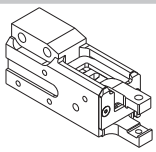

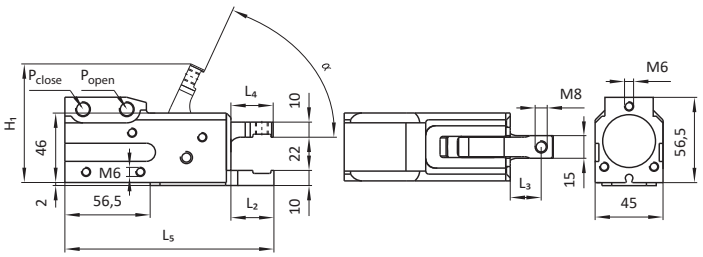

Part No.	Description	H_1 [mm]	L_2 [mm]	L_3 [mm]	L_4 [mm]	L_5 [mm]	α [°]	Clamping force [N]	m [kg]
103767	MKS-KGSP11-00-A-10°	49,7	30,5	22,5	30	140,5	10	650	0,84
103821	MKS-KGSP11-00-A-M-20° [1]	60,3	28,5	20,5	28	114,5	20	650	0,86
103770	MKS-KGSP11-00-A-30°	65,7	30,5	22,5	30	140,5	30	650	0,84
16721	MKS-KGSP11-00-A	78,6	30,5	22,5	30	140,5	65	650	0,84
102576	MKS-KGSP11-00-A-M [1]	80,5	28,5	20,5	28	144,5	65	650	0,84
101965	MKS-KGSP11-00-A-35-20°	63,3	43	35	42,5	153	20	560	0,91
103153	MKS-KGSP11-00-A-50-20°	68,4	58	50	57,5	168	20	470	0,91
103154	MKS-KGSP11-00-A-60-20°	71,8	68	60	67,5	178	20	420	0,93
103147	MKS-KGSP11-00-A-76-20°	77,5	84,5	76,5	84	194,5	20	250	0,97

[1] end position query piston position

Jaw Gripper

Description	Part No.
MKS-KGSP12-XX-XX-XX	see table

Type: clamping orientation angled, for clamping screw, clamping lever arm, ground plate with lead-in chamfer, ports (P) G1/8

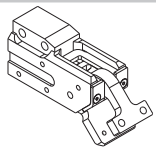

Material:

body:	aluminium
clamping lever arm:	steel
ground plate:	steel
seals:	NBR

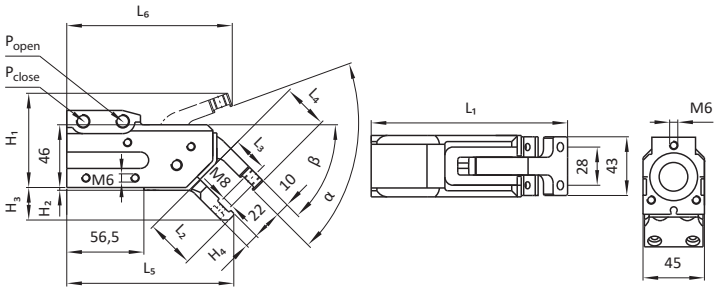

Part No.	Description	H_1 [mm]	H_3 [mm]	H_5 [mm]	L_1 [mm]	L_2 [mm]	L_3 [mm]	L_4 [mm]	L_5 [mm]	L_6 [mm]	α [°]	β [°]	Clamping force [N]	m [kg]
17386	MKS-KGSP12-30-0	111,3	13,7	56,5	145	33	23	30,5	130,7	111,3	65	30	700	0,92
17388	MKS-KGSP12-45-0	69,1	22,5	56,5	144	36	26	33,6	122,4	121,3	65	45	700	0,91
100494	MKS-KGSP12-60-0-20°	14,1	28,2	56,5	142	37	27	34,5	115	146,8	20	60	700	0,93
17390	MKS-KGSP12-60-0	61,6	28,2	56,5	142	37	27	34,5	115	130	65	60	700	0,93

Jaw Gripper

Description	Part No.
MKS-KGSP10-XX-XX-XX	see table

Type: clamping orientation angled, for clamping screw, clamping lever arm, ground plate with lead-in chamfer, sensor mounting for IDS02, ports (P) G1/8

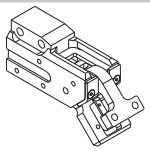

Material:
body: aluminium
clamping lever arm: steel
ground plate: steel
seals: NBR

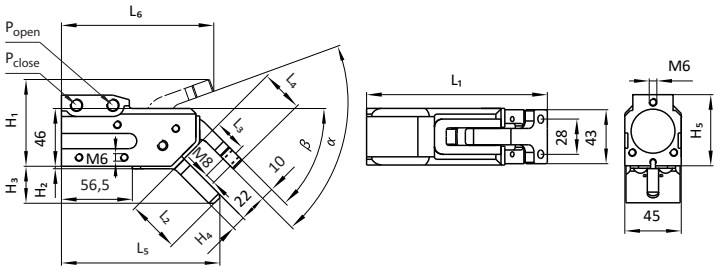

Part No.	Description	H_1 [mm]	H_3 [mm]	H_4 [mm]	L_1 [mm]	L_2 [mm]	L_3 [mm]	L_4 [mm]	L_5 [mm]	L_6 [mm]	α [°]	β [°]	Clamping force [N]	m [kg]
103548	MKS-KGSP10-30-0-10°	30,1	20,5	11	145	39	23	30,5	135,2	143,6	10	30	700	0,90
103549	MKS-KGSP10-30-0-15°	35,6	20,5	11	145	39	23	30,5	135,2	142,2	15	30	700	0,90
103550	MKS-KGSP10-30-0-20°	40,9	20,5	11	145	39	23	30,5	135,2	140,3	20	30	700	0,90
103551	MKS-KGSP10-30-0-30°	50,9	20,5	11	145	39	23	30,5	135,2	135,1	30	30	700	0,90
17380	MKS-KGSP10-30-0	111,3	20,5	11	145	39	23	30,5	135,2	111,3	65	30	700	0,90
103552	MKS-KGSP10-45-0-10°	4,8	29,5	11	144	42	26	33,6	126,1	144	10	45	700	0,93
103553	MKS-KGSP10-45-0-15°	21,6	29,5	11	144	42	26	33,6	126,1	144,8	15	45	700	0,93
103554	MKS-KGSP10-45-0-20°	27,2	29,5	11	144	42	26	33,6	126,1	144,1	20	45	700	0,93
103555	MKS-KGSP10-45-0-30°	38,1	29,5	11	144	42	26	33,6	126,1	141,3	30	45	700	0,93
17382	MKS-KGSP10-45-0	69,1	29,5	11	144	42	26	33,6	126,1	121,3	65	45	700	0,93
100799	MKS-KGSP10-OS-45-0 [2]	69,1	29,5	11	144	42	26	33,6	126,1	121,3	65	45	700	0,87
103556	MKS-KGSP10-60-0-10°	2,6	34,5	10	142	43	27	34,6	117	145,4	10	60	700	0,94
103557	MKS-KGSP10-60-0-15°	8,3	34,5	10	142	43	27	34,6	117	146,3	15	60	700	0,94
103558	MKS-KGSP10-60-0-20°	14,1	34,5	10	142	43	27	34,6	117	146,8	20	60	700	0,94
17384	MKS-KGSP10-60-0	61,6	34,5	10	142	43	27	34,6	117	130	65	60	700	0,94

[2] end position without self locking

Jaw Gripper

Description	Part No.
MKS-KGSP18-XX-0	see table

Type: clamping orientation angled, for clamping screw, clamping lever arm, ground plate without lead-in chamfer, sensor mounting for IDS19, ports (P) G1/8

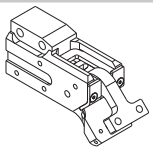

Material:
body: aluminium
clamping lever arm: steel
ground plate: steel
seals: NBR

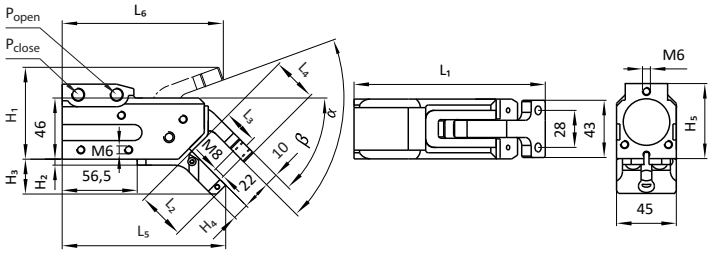

Part No.	Description	H_1 [mm]	H_3 [mm]	H_5 [mm]	L_1 [mm]	L_2 [mm]	L_3 [mm]	L_4 [mm]	L_5 [mm]	L_6 [mm]	α [°]	β [°]	Clamping force [N]	m [kg]
101988	MKS-KGSP18-30-0	111,3	19,4	56,5	145	33	23	30,5	131,2	111,3	65	30	700	0,99
101989	MKS-KGSP18-45-0	69,1	26,3	56,5	144	36	26	33,5	123,1	121,3	65	45	700	0,98
101990	MKS-KGSP18-60-0	61,6	30,3	56,5	142	37	27	34,5	115,5	130	65	60	700	0,98

Description	Part No.
MKS-KGSP12-XX-A	see table

Type: clamping orientation angled, for jaw platen, clamping lever arm, ground plate without lead-in chamfer, ports (P) G1/8

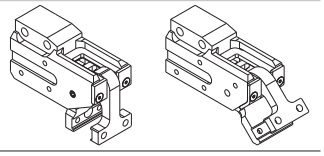

Material:
body: aluminium
clamping lever arm: steel
ground plate: steel
seals: NBR

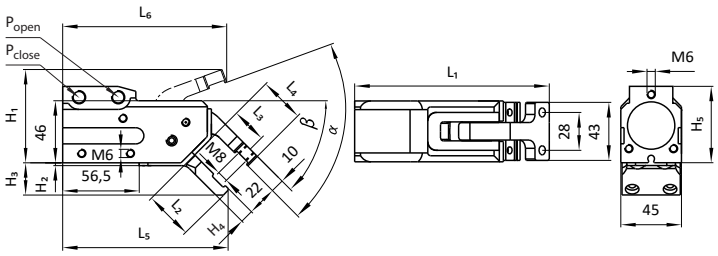

Part No.	Description	H_1 [mm]	H_3 [mm]	H_5 [mm]	L_1 [mm]	L_2 [mm]	L_3 [mm]	L_4 [mm]	L_5 [mm]	L_6 [mm]	α [°]	β [°]	Clamping force [N]	m [kg]
17387	MKS-KGSP12-30-A	111,3	16,7	56,5	145	33	23	30,5	130,7	111,3	65	30	700	0,92
17389	MKS-KGSP12-45-A	69,1	23,9	56,5	144	36	26	33,5	122,4	121,3	65	45	700	0,93
17391	MKS-KGSP12-60-A	61,6	28,2	56,5	142	37	27	34,5	115	130	65	60	700	0,93
17560	MKS-KGSP12-90-A	49,5	22,5	60	112,5	22	14,5	22	80,5	132	65	90	900	0,86

Jaw Gripper

Description	Part No.
MKS-KGSP10-XX-A-XX	see table

Type: clamping orientation angled, for jaw plate, clamping lever arm, ground plate without lead-in chamfer, sensor mounting for IDS02, ports (P) G1/8

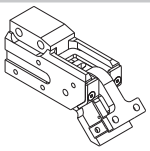

Material:
body: aluminium
clamping lever arm: steel
ground plate: steel
seals: NBR

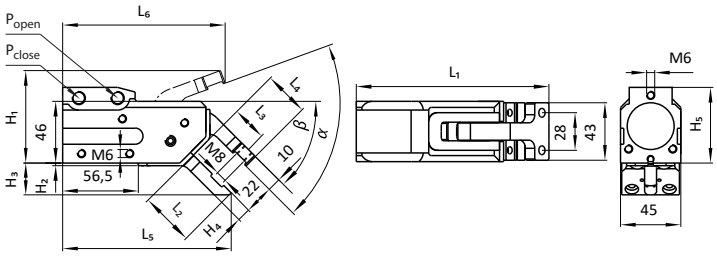

Part No.	Description	H_1 [mm]	H_3 [mm]	H_5 [mm]	L_1 [mm]	L_2 [mm]	L_3 [mm]	L_4 [mm]	L_5 [mm]	L_6 [mm]	α [°]	β [°]	Clamping force [N]	m [kg]
17381	MKS-KGSP10-30-A	111,3	16,7	56,5	145	37	23	30,5	134,6	111,3	65	30	700	0,89
103608	MKS-KGSP10-45-A-30°	38,1	23,9	56,5	144	40	26	33,5	126	141,3	30	45	700	0,88
17383	MKS-KGSP10-45-A	69,1	23,9	56,5	144	40	26	33,5	126	121,3	65	45	700	0,88
103612	MKS-KGSP10-60-A-30°	25,6	31,7	56,5	142	41	27	34,5	117,5	146,2	30	60	700	0,94
17385	MKS-KGSP10-60-A	61,6	31,7	56,5	142	41	27	34,5	117,5	130	65	60	700	0,94

Description	Part No.
MKS-KGSP11-XX-X-XX	see table

Type: clamping orientation angled, for clamping screw, clamping lever arm narrow, ports (P) G1/8

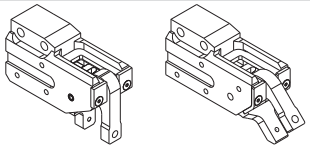

Material:
body: aluminium
clamping lever arm: steel
ground plate: steel
seals: NBR

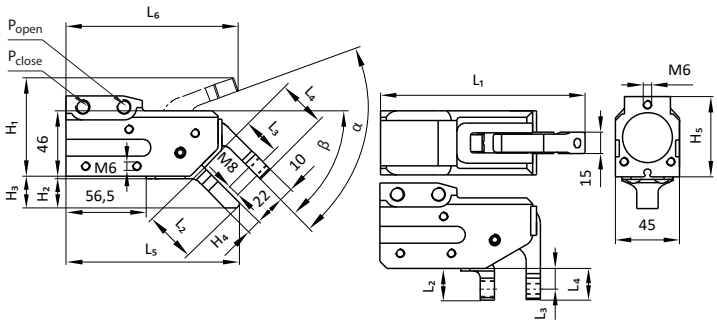

Part No.	Description	H_1 [mm]	H_3 [mm]	H_5 [mm]	L_1 [mm]	L_2 [mm]	L_3 [mm]	L_4 [mm]	L_5 [mm]	L_6 [mm]	α [°]	β [°]	Clamping force [N]	m [kg]
17556	MKS-KGSP11-90-0	-	22,5	60	112,5	22,5	14,5	22	80,5	132,1	65	90	900	0,81
104380	MKS-KGSP11-OS-90-0 [2]	-	22,5	60	112,5	22,5	14,5	22	80,5	132,1	65	90	900	0,81
100930	MKS-KGSP11-30-0	76	13,7	56,5	145	33	23	30,5	126,2	111,3	65	30	700	0,84
103730	MKS-KGSP11-45-0-30°	38,1	20,4	56,5	144	36	26	33,5	116	141,3	30	45	700	0,83
100931	MKS-KGSP11-45-0	69	20,4	56,5	144	36	26	33,5	116	121,3	65	45	700	0,83
100932	MKS-KGSP11-60-0	61,7	28,2	56,5	142	37	27	34,5	107	130	65	60	700	0,84

[2] end position without self locking

Jaw Gripper

Description	Part No.
MKS-KGSP19-XX-X-XX	see table

Type: clamping orientation angled, for clamping screw, clamping lever arm narrow, ground plate without lead-in chamfer, with sensor mounting for IDS19, ports (P) G1/8

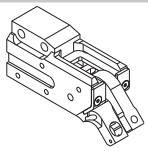

Material:
- body: aluminium
- clamping lever arm: steel
- ground plate: steel
- seals: NBR

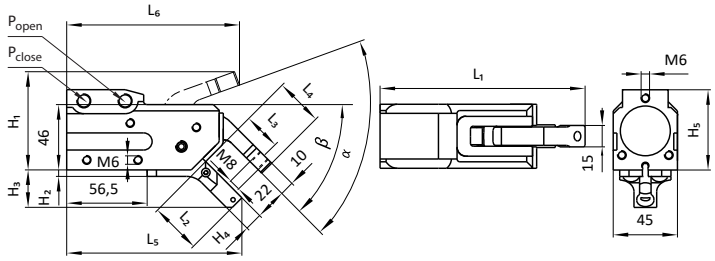

Part No.	Description	H_1 [mm]	H_3 [mm]	L_1 [mm]	L_2 [mm]	L_3 [mm]	L_4 [mm]	L_5 [mm]	L_6 [mm]	α [°]	β [°]	Clamping force [N]	m [kg]
103686	MKS-KGSP19-30-0-30°	50,9	19,3	145	33	23	30,5	125	135,1	30	30	700	0,85
101983	MKS-KGSP19-30-0	76	19,3	145	33	23	30,5	125	111,3	65	30	700	0,85
103690	MKS-KGSP19-45-0-30°	38,1	26,3	144	36	26	33,5	114,3	141,3	30	45	700	0,84
101984	MKS-KGSP19-45-0	69	26,3	144	36	26	33,5	114,3	121,3	65	45	700	0,84
101985	MKS-KGSP19-60-0	61,6	30,3	142	37	27	34,5	104,7	130	65	60	700	0,87

Description	Part No.
MKS-KGSP11-XX-A	see table

Type: clamping orientation angled, for jaw plate, clamping lever arm narrow, ground plate without lead-in chamfer, ports (P) G1/8

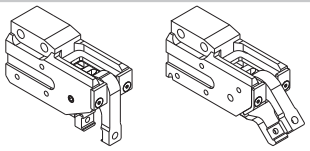

Material:
- body: aluminium
- clamping lever arm: steel
- ground plate: steel
- seals: NBR

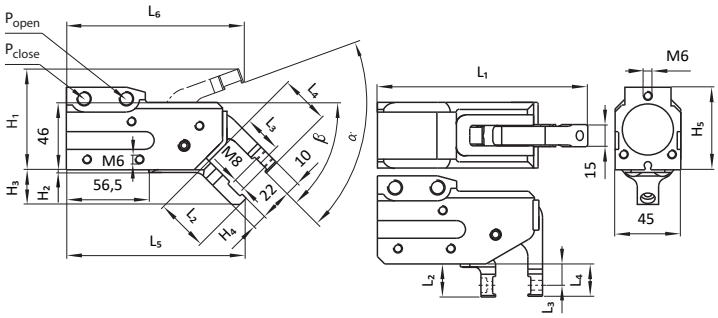

Part No.	Description	H_1 [mm]	H_3 [mm]	H_5 [mm]	L_1 [mm]	L_2 [mm]	L_3 [mm]	L_4 [mm]	L_5 [mm]	L_6 [mm]	α [°]	β [°]	Clamping force [N]	m [kg]
101723	MKS-KGSP11-30-A	76	16,7	56,5	145	33	23	30,5	126,2	111,5	65	30	700	0,83
101724	MKS-KGSP11-45-A	69,1	23,8	56,5	144	36	26	33,5	116	121,5	65	45	700	0,83
101725	MKS-KGSP11-60-A	61,6	28,2	56,5	142	37	27	34,5	107	130	65	60	700	0,84
17559	MKS-KGSP11-90-A	-	-	60	112,5	22,5	14,5	22	70,5	132	65	90	900	0,80

Jaw Gripper

Description	Part No.
MKS-KGSP12-XX-90-XX	see table

Type: clamping orientation 90°, for clamping screw, clamping lever arm, ground plate without lead-in chamfer, with / without sensor mounting for IDS23, ports (P) G1/8

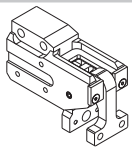

Material:
- body: aluminium
- clamping lever arm: steel
- ground plate: steel
- seals: NBR

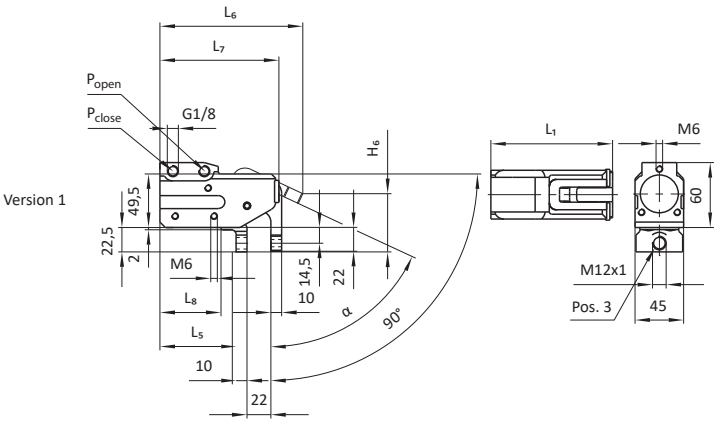

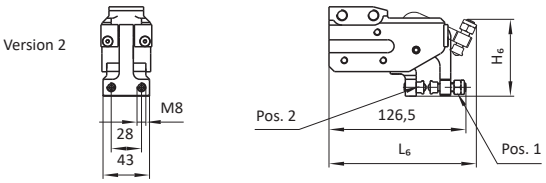

Part No.	Description	L_1 [mm]	L_5 [mm]	L_6 [mm]	L_7 [mm]	Clamping force [N]	m [kg]	Version	Clamping screw [Pos. 1]	Clamping screw [Pos. 2]	Sensor mounting [Pos. 3]
17557	MKS-KGSP12-90-0	112,5	70,5	132	110	900	0,88	1	-	-	yes
103508	MKS-KGSP12-OS-90-0 [2]	112,5	70,5	132	110	900	0,88	1	-	-	yes
107540	MKS-KGSP12-90-0-M [1]	118,5	76,5	138	116	900	0,92	1	-	-	yes
19958	MKS-KGSP12-90-M8	112,5	70,5	132	110	900	0,88	2	-	-	no
19978	MKS-KGSP12-90-M8-S1	126,5	70,5	136,1	110	900	0,93	2	MKS-SPS11-35 (2x)	MKS-SPS11-20 (2x)	no

[1] end position query piston position [2] end position without self locking

Description	Part No.
MKS-KGSP18-XX-X-XX	see table

Type: clamping orientation 0°, for clamping screw, clamping lever arm, ground plate without lead-in chamfer, sensor mounting for IDS19, ports (P) G1/8

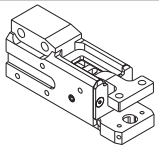

Material:
- body: aluminium
- clamping lever arm: steel
- ground plate: steel
- seals: NBR

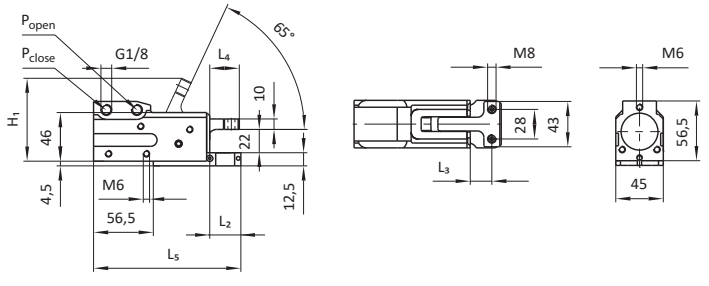

Part No.	Description	H_1 [mm]	L_2 [mm]	L_3 [mm]	L_4 [mm]	L_5 [mm]	α [°]	Clamping force [N]	m [kg]
104646	MKS-KGSP18-00-0-K-20	58,3	29,5	20,5	28	139,5	20	650	0,96
101987	MKS-KGSP18-00-0-K	78,5	29,5	20,5	28	139,5	65	650	0,96
105661	MKS-KGSP18-00-0-35-K-20°	63,2	44	35	42,5	154	20	560	0,90

Description	Part No.
MKS-KGSP10-30-0-K	104661

Type: clamping orientation 30°, for clamping screw, clamping lever arm, ground plate without lead-in chamfer, sensor mounting for IDS02, ports (P) G1/8

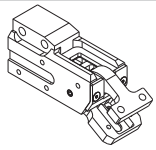

Material:
- body: aluminium
- clamping lever arm: steel
- ground plate: steel
- seals: NBR

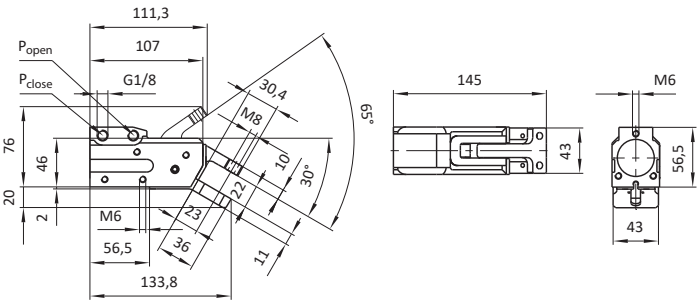

Part No.	Description	Clamping force [N]	m [kg]
104661	MKS-KGSP10-30-0-K	700	0,91

Jaw Gripper

Description	Part No.
MKS-KGSP11-90-0-S1	102508

Type: clamping orientation 90°, for clamping screw, clamping lever arm narrow, ground plate without lead-in chamfer, with sensor mounting for IDS04, ports (P) G1/8

Material: body: aluminium
clamping lever arm: steel
ground plate: steel
seals: NBR

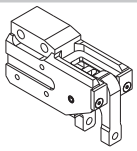

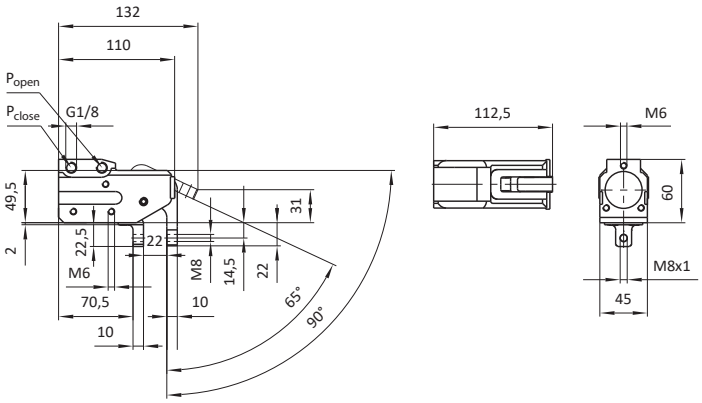

Part No.	Description	Clamping force [N]	m [kg]
102508	MKS-KGSP11-90-0-S1	900	0,84

Description	Part No.
MKS-KGSP14-00-A	102397

Type: clamping orientation 0°, for jaw plate, clamping lever arm, recessed ground plate without lead-in chamfer, with sensor mounting for IDS02, ports (P) G1/8

Material: body: aluminium
clamping lever arm: steel
ground plate: steel
seals: NBR

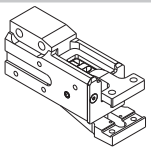

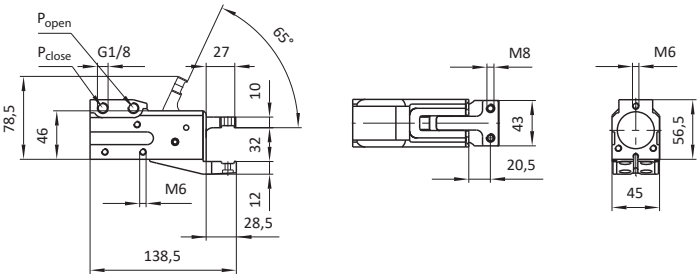

Part No.	Description	Clamping force [N]	m [kg]
102397	MKS-KGSP14-00-A	650	0,98

Description	Part No.
MKS-KGSP19-00-0-S1	102255

Type: clamping orientation 0°, for clamping screw, clamping lever arm narrow, recessed ground plate with lead-in chamfer, sensor mounting for IDS19, ports (P) G1/8

Material: body: aluminium
clamping lever arm: steel
ground plate: steel
seals: NBR

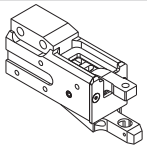

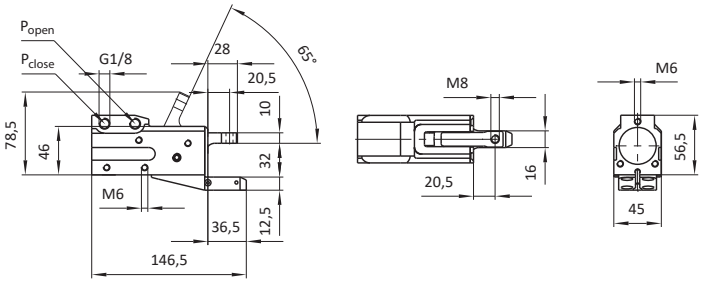

Part No.	Description	Clamping force [N]	m [kg]
102255	MKS-KGSP19-00-0-S1	650	0,91

Description	Part No.
MKS-KGSP14-00-0-K	104435

Type: clamping orientation 0°, for clamping screw, clamping lever arm, recessed ground plate with lead-in chamfer, with sensor mounting for IDS02, ports (P) G1/8

Material: body: aluminium
clamping lever arm: steel
ground plate: steel
seals: NBR

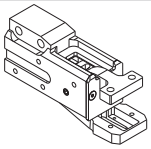

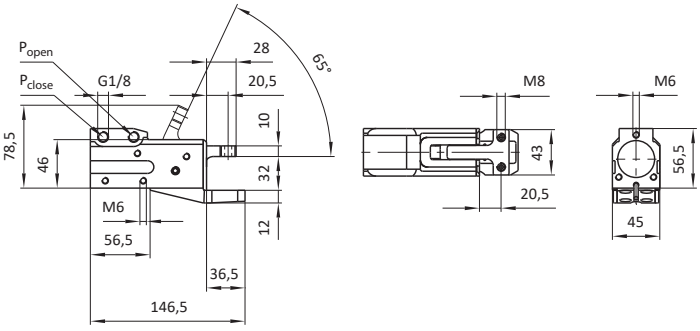

Part No.	Description	Clamping force [N]	m [kg]
104435	MKS-KGSP14-00-0-K	650	0,98

Jaw Gripper

Description	Part No.
MKS-KGSP11-00-0-S2	100457

Type: clamping orientation 0°, for clamping screw, clamping lever arm medium, ground plate with lead-in chamfer, ports (P) G1/8

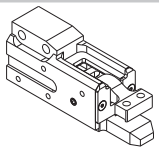

Material:		
	body:	aluminium
	clamping lever arm:	steel
	ground plate:	steel
	seals:	NBR

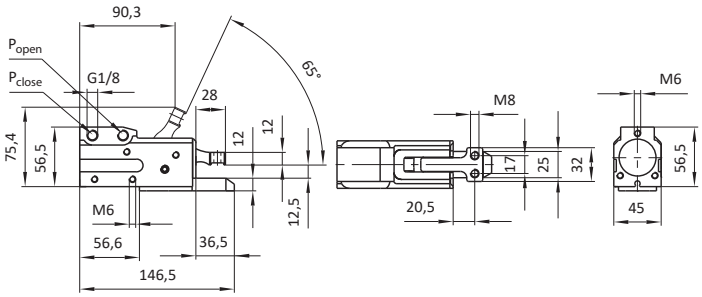

Part No.	Description	Clamping force [N]	m [kg]
100457	MKS-KGSP11-00-0-S2	650	0,93

Description	Part No.
MKS-KGSP12-90-A	17560

Type: clamping orientation 90°, for jaw plate, clamping lever arm, with sensor preparation IDS23, ports (P) G1/8

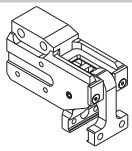

Material:		
	body:	aluminium
	clamping lever arm:	steel
	ground plate:	steel
	seals:	NBR

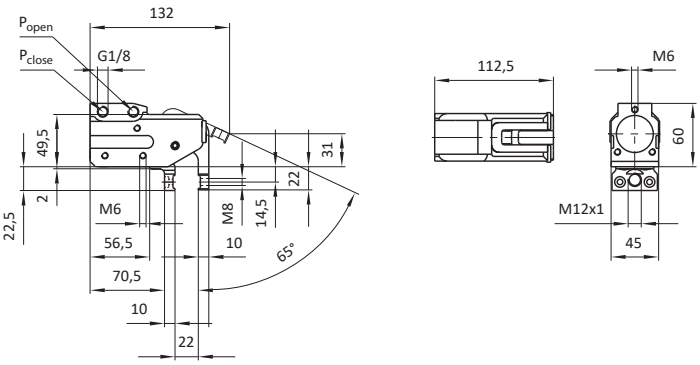

Part No.	Description	Clamping force [N]	m [kg]
17560	MKS-KGSP12-90-A	900	0,86

Description	Part No.
MKS-KGSP10-00-0-50-20°-PB	111482

Type: clamping orientation 0°, for clamping screw, clamping lever arm extended, ground plate with lead-in chamfer, with sensor mounting for IDS02, ports (P) G1/8

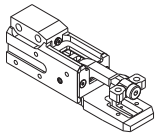

Material:		
	body:	aluminium
	clamping lever arm:	steel
	ground plate:	steel
	seals:	NBR

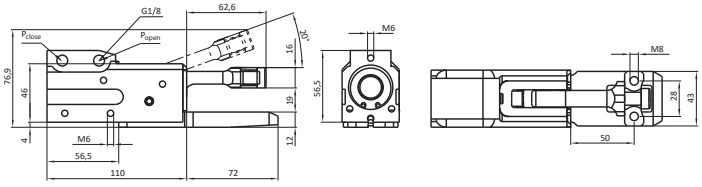

Part No.	Description	Clamping force [N]	m [kg]
111482	MKS-KGSP10-00-0-50-20°-PB	470	1,17

Description	Part No.
MKS-KGSP10-00-0-20-65°-PB	113899

Type: clamping orientation 0°, for clamping screw, clamping lever arm, ground plate with lead-in chamfer, with sensor mounting for IDS02, ports (P) G1/8

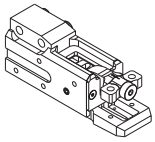

Material:		
	body:	aluminium
	clamping lever arm:	steel
	ground plate:	steel
	seals:	NBR

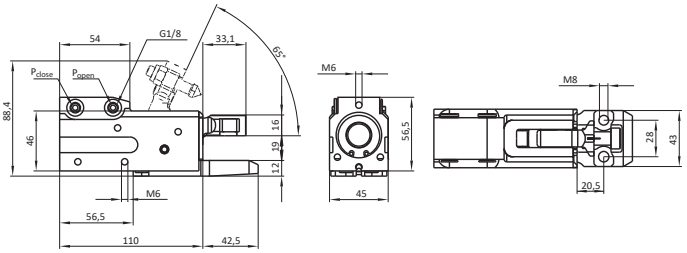

Part No.	Description	Clamping force [N]	m [kg]
113899	MKS-KGSP10-00-0-20-65°-PB	650	1,00

Accessories for Jaw Gripper

Description	Part No.
MKS-HST08	101797

Type: back up roll for sheet

Material: steel

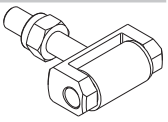

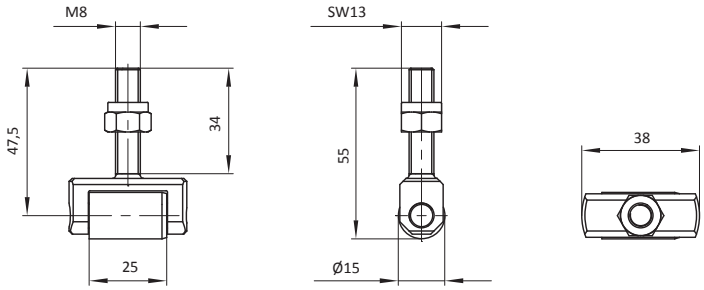

Part No.	Description	m [kg]
101797	MKS-HST08	0,08

Gripper Mounting (Jaw Gripper)

Description	Part No.
MKSXX-GB94-XX-XX	see table

Type: tube with flange, assembly rear end

Material: see table

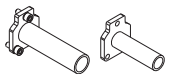

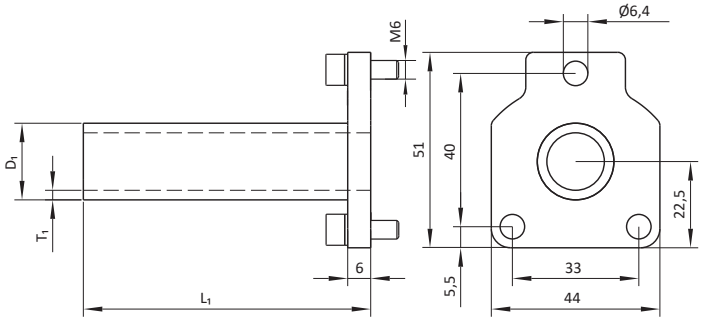

Part No.	Description	D_1 [mm]	L_1 [mm]	T_1 [mm]	Mounting screw	Material	m [kg]
16111	MKS20-GB94-D100	20	100	2,5	no	D	0,18
16113	MKS20-GB94-D200	20	200	2,5	no	D	0,29
16115	MKS20-GB94-D300	20	300	2,5	no	D	0,39
19630	MKS20-GB94-D400	20	400	2,5	no	D	0,51
19631	MKS20-GB94-D500	20	500	2,5	no	D	0,61
16117	MKS25-GB94-D100	25	100	2,5	yes	D	0,22
16119	MKS25-GB94-D200	25	200	2,5	yes	D	0,36
16121	MKS25-GB94-D300	25	300	2,5	yes	D	0,50
16891	MKS25-GB94-D400	25	400	2,5	yes	D	0,64
17694	MKS25-GB94-D500	25	500	2,5	yes	D	0,78
16123	MKS30-GB94-D100	30	100	2,5	no	D	0,23
16125	MKS30-GB94-D200	30	200	2,5	no	D	0,40
16127	MKS30-GB94-D300	30	300	2,5	no	D	0,56
19090	MKS30-GB94-D400	30	400	2,5	no	D	0,74
19629	MKS30-GB94-D500	30	500	2,5	no	D	0,90
19965	MKS30-GB94-D600	30	600	2,5	no	D	1,07
106210	MKS30-GB94-65-AL	30	65	5	yes	A	0,11

Description	Part No.
MKSXX-GBXXX-X-XXX	see table

Type: clamp seat with flange, assembly rear end

Material: see table

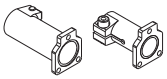

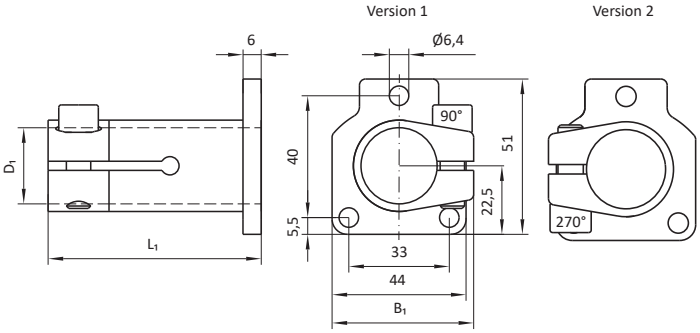

Part No.	Description	D_1 [mm]	L_1 [mm]	Material	m [kg]	Version
16130	MKS30-GB95	30	91	D	0,26	1
16129	MKS25-GB95	25	70	D	0,21	1
16128	MKS20-GB95	20	60	D	0,18	1
19691	MKS30-GB95-2	30	91	D	0,26	2
106209	MKS30-GB95-2-AL	30	91	A	0,12	2
106208	MKS30-GB95-AL	30	91	A	0,12	1
103361	KMS20-GB135-KAR	20	62	D	0,19	2
103362	MKS25-GB135-KAR	25	72	D	0,36	2

Description	Part No.
MKS-GB152	108010

Type: ball with flange, assembly rear end

Material: steel

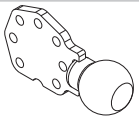

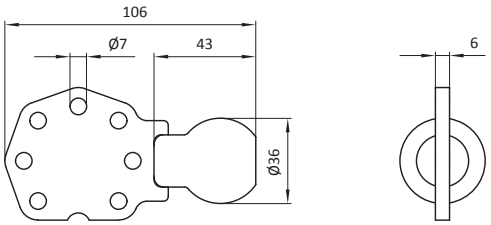

Part No.	Description	m [kg]
108010	MKS-GB152	0,35

Material
A → aluminium
D → steel

Technical changes and errors are subject to change without notice!
www.springer.group
Document Date: CW 16.2025

Gripper Mounting (Jaw Gripper)

Description	Part No.
MKS-GB9X-L	see table

Type: ball with flange, assembly left

Material: steel

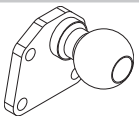

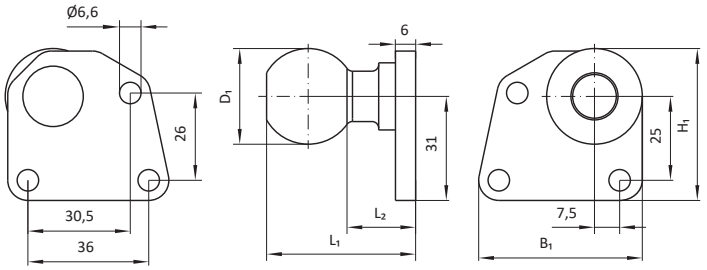

Part No.	Description	D_1 [mm]	H_1 [mm]	B_1 [mm]	L_1 [mm]	L_2 [mm]	m [kg]
16108	MKS-GB93-L	28,5	45,3	48,8	44,4	32	0,17
16131	MKS-GB96-L	36	49	52,5	50	35	0,27

Description	Part No.
MKS-GB9X-R	see table

Type: ball with flange, assembly right

Material: steel

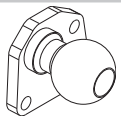

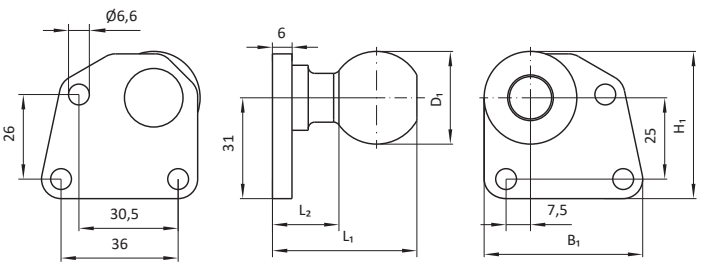

Part No.	Description	D_1 [mm]	H_1 [mm]	B_1 [mm]	L_1 [mm]	L_2 [mm]	m [kg]
16109	MKS-GB93-R	28,5	45,3	48,8	44,4	32	0,17
16132	MKS-GB96-R	36	49	52,5	50	35	0,27

Description	Part No.
MKS-GB9X-L-X-XX	see table

Type: ball with flange and guiding, assembly left

Material: see table

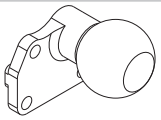

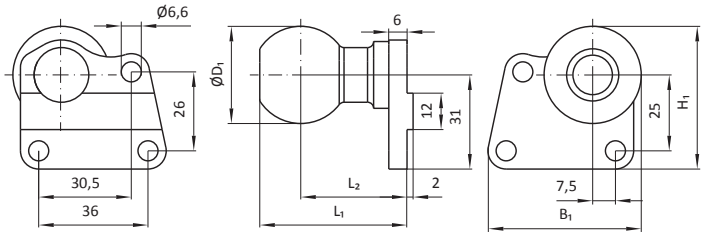

Part No.	Description	D_1 [mm]	H_1 [mm]	B_1 [mm]	L_1 [mm]	L_2 [mm]	Material	m [kg]
16853	MKS-GB93-L-1	28,5	45,3	48,6	44,4	32	D	0,18
19962	MKS-GB96-L-2	32	47	50,4	48,5	35	D	0,23
16855	MKS-GB96-L-1	36	49	52,4	50	35	D	0,27
101552	MKS-GB96-L-1-AL	36	49	52,5	50	35	A	0,11

Description	Part No.
MKS-GB9X-R-X-XX	see table

Type: ball with flange and guiding, assembly right

Material: see table

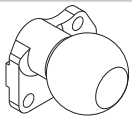

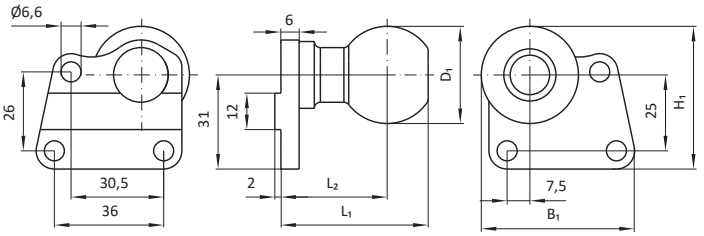

Part No.	Description	D_1 [mm]	H_1 [mm]	B_1 [mm]	L_1 [mm]	L_2 [mm]	Material	m [kg]
16854	MKS-GB93-R-1	28,5	45,3	48,6	44,4	32	D	0,18
19963	MKS-GB96-R-2	32	47	50,4	48,5	35	D	0,23
16856	MKS-GB96-R-1	36	49	52,4	50	35	D	0,27
101553	MKS-GB96-R-1-AL	36	49	52,5	50	35	A	0,11

Description	Part No.
MKS-GB96-L/R-3-XXX	see table

Type: ball with flange, assembly left or right

Material: steel

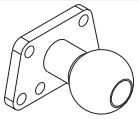

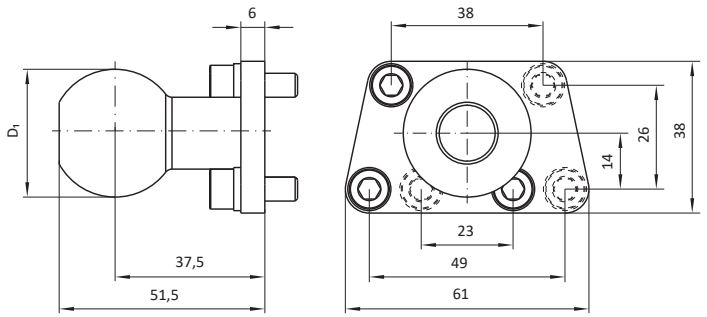

Part No.	Description	D_1 [mm]	m [kg]
106802	MKS-GB96-L/R-3-K32	32	0,24
108011	MKS-GB96-L/R-3-K36	36	0,26

Description	Part No.
MKS-GB96-L/R-3-W20	107755

Type: rod journal with flange, assembly right or left, with holes

Material: steel



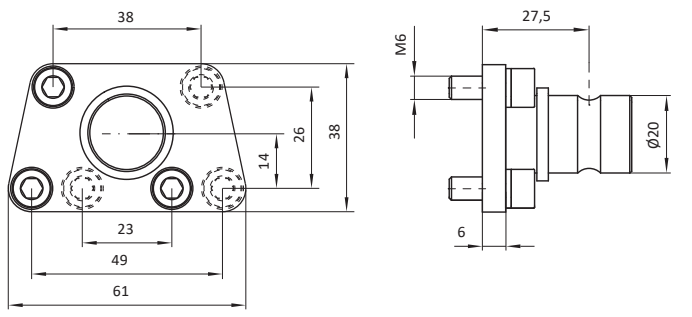

Part No.	Description	m [kg]
107755	MKS-GB96-L/R-3-W20	0,25

Material
A → aluminium
D → steel

Gripper Mounting (Jaw Gripper)

Description	Part No.
MKS-GB113-X	see table

Type: ball left with flange, assembly rear end

Material: steel

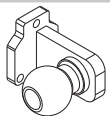

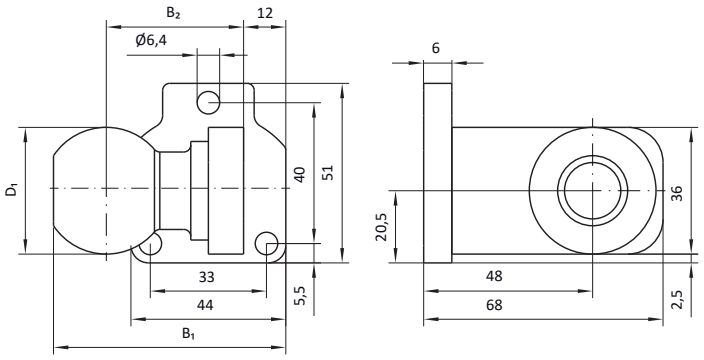

Part No.	Description	D_1 [mm]	B_1 [mm]	B_2 [mm]	m [kg]
104043	MKS-GB113-7	28,5	60,4	36	0,34
104157	MKS-GB113-8	32	64,5	39	0,39
100442	MKS-GB113-4	36	66	39	0,46

Description	Part No.
MKS-GB113-X	see table

Type: ball right with flange, assembly rear end

Material: steel

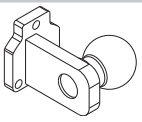

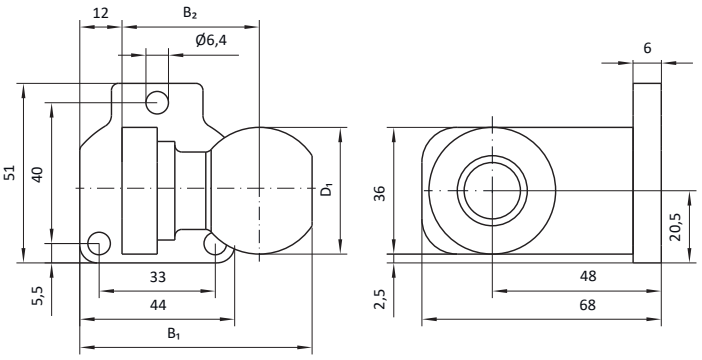

Part No.	Description	D_1 [mm]	B_1 [mm]	B_2 [mm]	m [kg]
100186	MKS-GB113-3	28,5	60,4	36	0,34
19976	MKS-GB113-2	32	64,5	39	0,39
19718	MKS-GB113-1	36	66	39	0,46

Description	Part No.
MKS-GB113-X	see table

Type: ball up /down with flange, assembly rear end

Material: steel

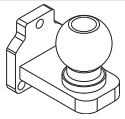

Version 1 Version 2

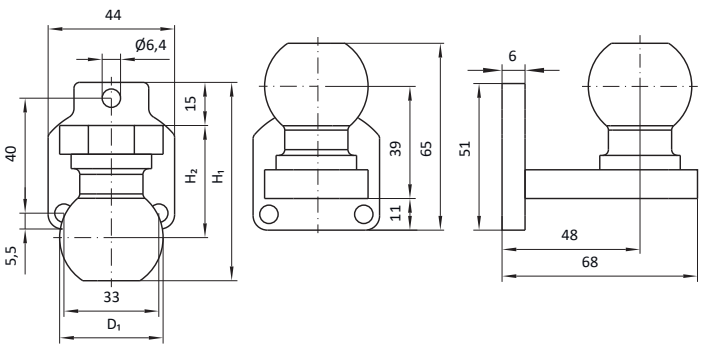

Part No.	Description	D_1 [mm]	H_1 [mm]	H_2 [mm]	m [kg]	Version
104859	MKS-GB113-9	28,5	63,4	36	0,34	1
112951	MKS-GB113-16	32	67,5	39	0,39	1
103980	MKS-GB113-6	36	69	39	0,46	1
107714	MKS-GB113-10	28,5	-	-	0,34	2
112950	MKS-GB113-15	32	-	-	0,39	2
103979	MKS-GB113-5	36	-	-	0,46	2

Description	Part No.
MKS-GB96-4-K32	107756

Type: ball with flange, assembly rear end

Material: steel

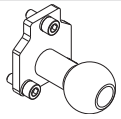

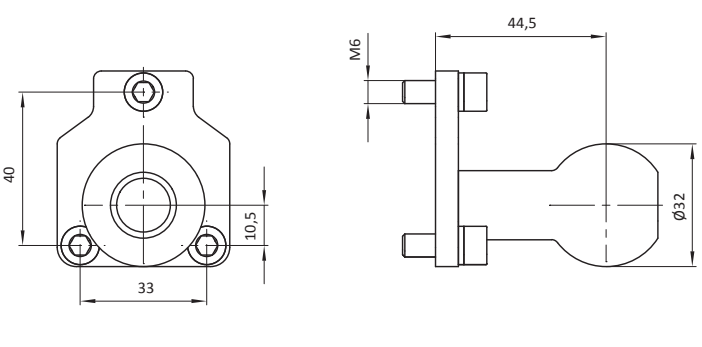

Part No.	Description	m [kg]
107756	MKS-GB96-4-K32	0,26

Strain Relief (Jaw Gripper)

Description	Part No.
MKS-SCH05-01	19624

Type: for jaw gripper

Material: material mix

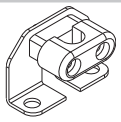

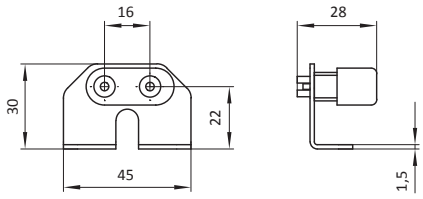

Part No.	Description	m [kg]
19624	MKS-SCH05-01	0,02

Description	Part No.
MKS-SCH05-03	103306

Type: for jaw gripper

Material: material mix

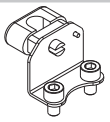

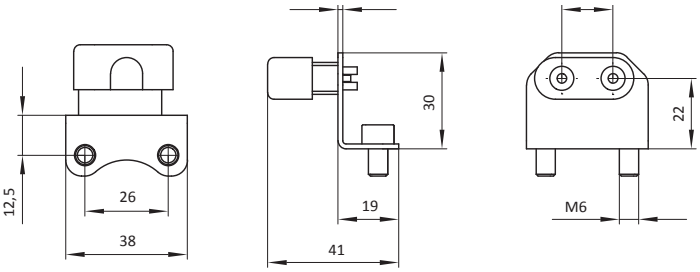

Part No.	Description	m [kg]
103306	MKS-SCH05-03	0,04

Description	Part No.
MKS-SCH13	103310

Type: for jaw gripper, mounting for connector and strain relief

Material: aluminium

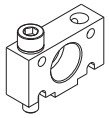

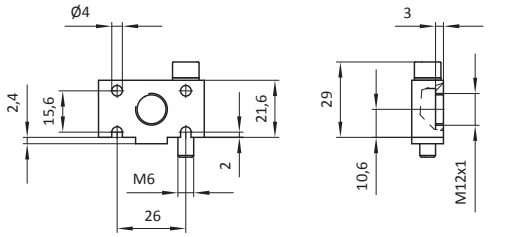

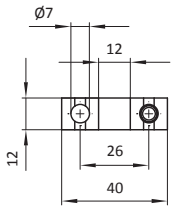

Part No.	Description	m [kg]
103310	MKS-SCH13	0,03

Description	Part No.
MKS-SCH08	101410

Type: strain relief for MKS-IDS11/12

Material: material mix

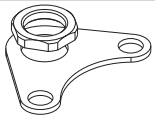

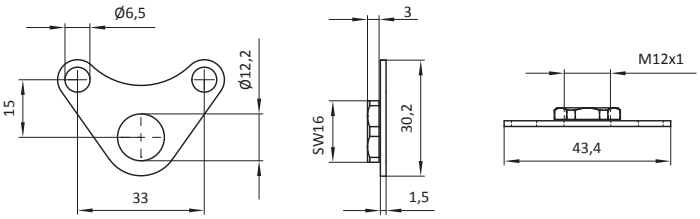

Part No.	Description	m [kg]
101410	MKS-SCH08	0,02

Open Angle Limiter (Jaw Gripper)

Description	Part No.
MKS-DP02-XX°	see table

Type: spacer

Material: composite

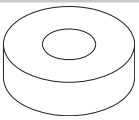

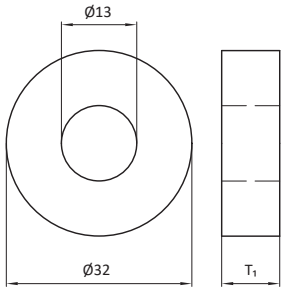

Part No.	Description	T_1 [mm]	m [kg]
17273	MKS-DP02-10°	10	0,01
101869	MKS-DP02-15°	8,6	0,01
17274	MKS-DP02-20°	7,4	0,01
17275	MKS-DP02-30°	5,3	0,01
104446	MKS-DP02-45°	3	0,01

Jaw Gripper - compact type

Description	Part No.
MKS-KGSP50/25/St-00-XX-XX-0	see table

Type: body steel, clamping orientation 0°, clamping type wide, clamping lever arm up for clamping screw, clamping lever arm down plain, ports (P) G1/8

Material: body: steel; clamping lever arm: steel; seals: NBR

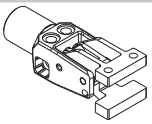

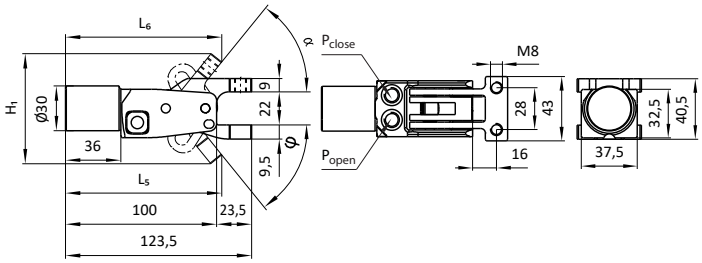

Part No.	Description	H_1 [mm]	L_5 [mm]	L_6 [mm]	α [°]	φ [°]	Clamping force [N]	m [kg]
103190	MKS-KGSP50/25/St-00-20-03-0	51,3	123	117,9	20	3	1000	0,55
103189	MKS-KGSP50/25/St-00-20-20-0	59,3	117,9	117,9	20	20	1000	0,55
103188	MKS-KGSP50/25/St-00-51-03-0	66,5	123	103,5	51	3	1000	0,55
103094	MKS-KGSP50/25/St-00-51-51-0	73,7	103,5	103,5	51	51	1000	0,55
103093	MKS-KGSP50/25/St-00-70-03-0	69,5	123	92,8	70	3	1000	0,55

Description	Part No.
MKS-KGSP50/25/St-00-XX-XX-A-XX	see table

Type: body steel, clamping orientation 0°, clamping type wide, clamping lever arm up for jaw plate, clamping lever arm down for jaw plate, ports (P) G1/8

Material: body: steel; clamping lever arm: steel; seals: NBR

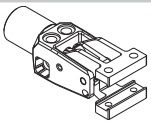

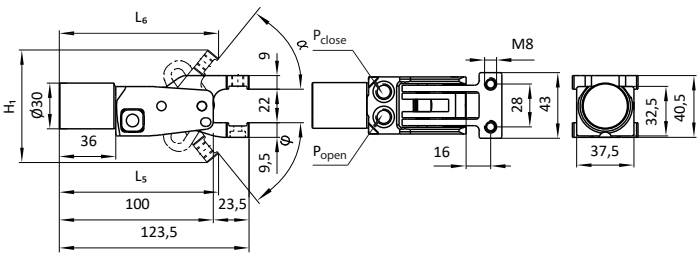

Part No.	Description	H_1 [mm]	L_5 [mm]	L_6 [mm]	α [°]	φ [°]	Clamping force [N]	m [kg]	Temperature range
103206	MKS-KGSP50/25/St-00-20-03-A	51,5	123	117,9	20	3	1000	0,55	normal
103205	MKS-KGSP50/25/St-00-20-20-A	59,3	117,9	117,9	20	20	1000	0,55	normal
103204	MKS-KGSP50/25/St-00-51-03-A	66,5	123	103,5	51	3	1000	0,55	normal
103096	MKS-KGSP50/25/St-00-51-51-A	73,7	103,5	103,5	51	51	1000	0,55	normal
103095	MKS-KGSP50/25/St-00-70-03-A	70	123	92,8	70	3	1000	0,55	normal
107430	MKS-KGSP50/25/St-00-70-03-A-S2	70	123	92,8	70	3	1000	0,55	high

normal: -5…+100°C / high: -5…+150°C

Description	Part No.
MKS-KGSP52/25/St-00-XX-XX-0	see table

Type: body steel, clamping orientation 0°, clamping type wide, with sensor preparation IDS19, clamping lever arm up for clamping screw, clamping lever arm down plain for sensor, ports (P) G1/8

Material: body: steel; clamping lever arm: steel; seals: NBR

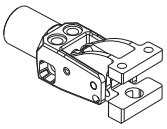

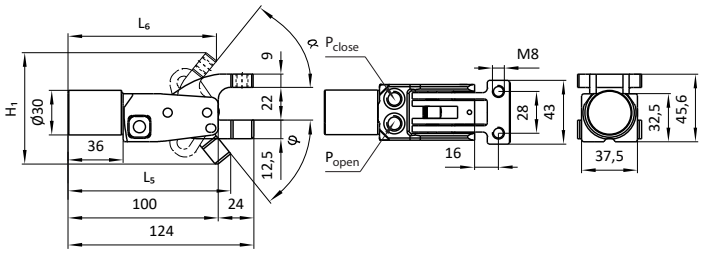

Part No.	Description	H_1 [mm]	L_5 [mm]	L_6 [mm]	α [°]	φ [°]	Clamping force [N]	m [kg]
103195	MKS-KGSP52/25/St-00-20-03-0	54,2	123,7	116	20	3	1000	0,51
103194	MKS-KGSP52/25/St-00-51-03-0	70,2	123,7	98,8	51	3	1000	0,51
107088	MKS-KGSP52/25/St-00-70-00-0	71,5	124	87,2	70	0,8*	1000	0,51
103101	MKS-KGSP52/25/St-00-70-03-0	71,5	123,7	87,2	70	3	1000	0,51

*technically conditioned

Description	Part No.
MKS-KGSP52/25/St-00-XX-XX-A	see table

Type: body steel, clamping orientation 0°, clamping type wide, with sensor preparation IDS19, clamping lever arm up for jaw plate, clamping lever arm down plain for sensor, ports (P) G1/8

Material: body: steel; clamping lever arm: steel; seals: NBR

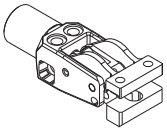

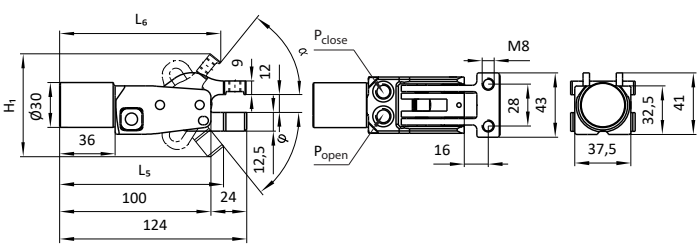

Part No.	Description	H_1 [mm]	L_5 [mm]	L_6 [mm]	α [°]	φ [°]	Clamping force [N]	m [kg]
103203	MKS-KGSP52/25/St-00-20-03-A	44,7	124,7	119,3	20	3	1000	0,51
103202	MKS-KGSP52/25/St-00-51-03-A	64	123,7	106,6	51	3	1000	0,51
103102	MKS-KGSP52/25/St-00-70-03-A	68,1	123,7	96,6	70	3	1000	0,51

Jaw Gripper - compact type

Description	Part No.
MKS-KGSP52/25/St-00-XX-XX-0-35	see table

Type: body steel, clamping orientation 0°, clamping type wide extended, with sensor preparation IDS19, clamping lever arm up for clamping screw, clamping lever arm down plain for sensor, ports (P) G1/8

Material: body: steel; clamping lever arm: steel; seals: NBR

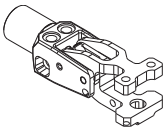

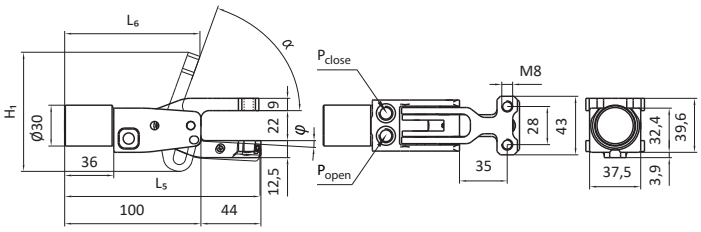

Part No.	Description	H_1 [mm]	L_5 [mm]	L_6 [mm]	α [°]	φ [°]	Clamping force [N]	m [kg]
107529	MKS-KGSP52/25/St-00-20-20-0-35	75	137,2	135,8	20	20	500	0,61
107530	MKS-KGSP52/25/St-00-51-0F-0-35	81	144	115,5	51	0,8*	500	0,61
107535	MKS-KGSP52/25/St-00-70-03-0-35	87,5	143,4	99,3	70	3	500	0,61

*technically conditioned

Description	Part No.
MKS-KGSP52/25/St-00-65-20-0-35-S1	107536

Type: body steel, clamping orientation 0°, clamping type wide, with sensor preparation IDS19, clamping lever arm up for clamping screw cranked, clamping lever arm down plain for sensor, ports (P) G1/8

Material: body: steel; clamping lever arm: steel; seals: NBR

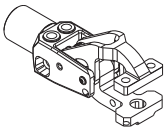

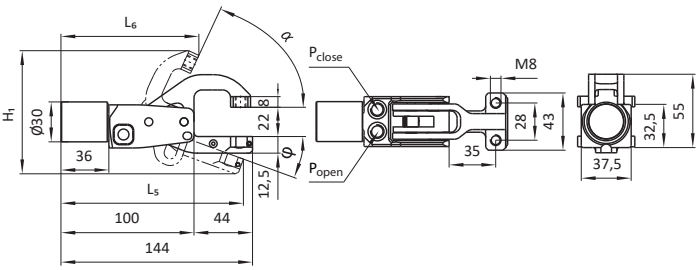

Part No.	Description	H_1 [mm]	L_5 [mm]	L_6 [mm]	α [°]	φ [°]	Clamping force [N]	m [kg]
107536	MKS-KGSP52/25/St-00-65-20-0-35-S1	92,3	137,2	103,7	65	20	500	0,62

Description	Part No.
MKS-KGSP50/25/St-00-XX-XX-X	see table

Type: body steel, clamping orientation 0°, clamping type wide, clamping lever arm up / down, with / without serration, ports (P) G1/8

Material: body: steel; clamping lever arm: steel; seals: NBR

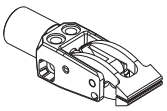

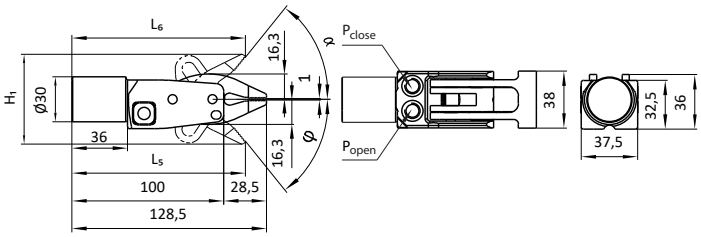

Part No.	Description	H_1 [mm]	L_5 [mm]	L_6 [mm]	α [°]	φ [°]	Clamping force [N]	m [kg]	Gripping surface serrated
103148	MKS-KGSP50/25/St-00-20-03-B	37,3	128,4	126	20	3	800	0,51	yes
103290	MKS-KGSP50/25/St-00-20-20-B	37,3	126	126	20	20	800	0,51	yes
103289	MKS-KGSP50/25/St-00-51-03-B	59	128,4	114,4	51	3	800	0,51	yes
103288	MKS-KGSP50/25/St-00-51-51-B	59,9	114,4	114,4	51	51	800	0,51	yes
103287	MKS-KGSP50/25/St-00-70-03-B	67,9	128,4	104,2	70	3	800	0,51	yes
103300	MKS-KGSP50/25/St-00-20-03-C	37,3	128,4	126	20	3	800	0,51	no
103299	MKS-KGSP50/25/St-00-20-20-C	37,3	126	126	20	20	800	0,51	no
103298	MKS-KGSP50/25/St-00-51-03-C	59	128,4	114,4	51	3	800	0,51	no
103297	MKS-KGSP50/25/St-00-51-51-C	59,9	114,4	114,4	51	51	800	0,51	no
103296	MKS-KGSP50/25/St-00-70-03-C	67,9	128,4	104,2	70	3	800	0,51	no

Description	Part No.
MKS-KGSP51/25/St-00-XX-XX-0	see table

Type: body steel, clamping orientation 0°, clamping type narrow, clamping lever arm up for clamping screw, clamping lever arm down plain, ports (P) G1/8

Material: body: steel; clamping lever arm: steel; seals: NBR

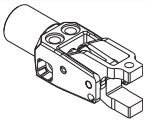

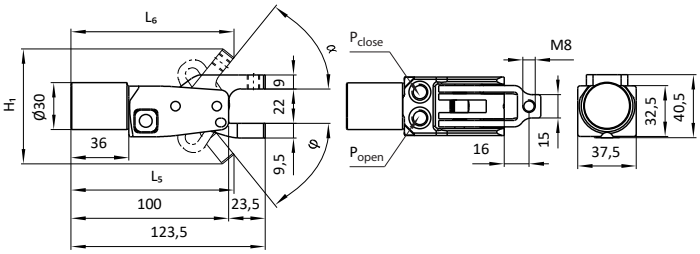

Part No.	Description	H_1 [mm]	L_5 [mm]	L_6 [mm]	α [°]	φ [°]	Clamping force [N]	m [kg]
103280	MKS-KGSP51/25/St-00-20-03-0	51,5	122,9	117,9	20	3	1000	0,52
103279	MKS-KGSP51/25/St-00-20-20-0	59,3	117,9	117,9	20	20	1000	0,52
103278	MKS-KGSP51/25/St-00-51-03-0	66,5	123	103,5	51	3	1000	0,52
103098	MKS-KGSP51/25/St-00-51-51-0	73,7	103,5	103,5	51	51	1000	0,52
103097	MKS-KGSP51/25/St-00-70-03-0	69,5	123	92,8	70	3	1000	0,52

Jaw Gripper - compact type

Description	Part No.
MKS-KGSP51/25/St-00-XX-XX-A	see table

Type: body steel, clamping orientation 0°, clamping type narrow, clamping lever arm up for jaw plate, clamping lever arm down for jaw plate, ports (P) G1/8

Material: body: steel; clamping lever arm: steel; seals: NBR

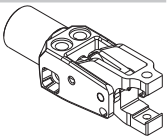

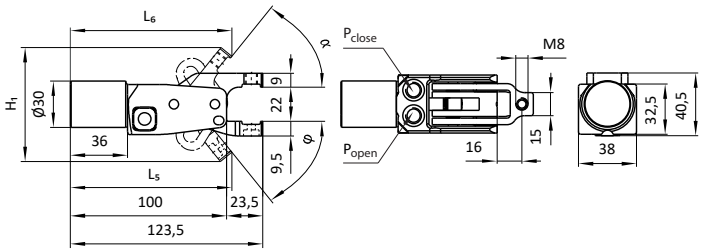

Part No.	Description	H_1 [mm]	L_5 [mm]	L_6 [mm]	α [°]	φ [°]	Clamping force [N]	m [kg]
103186	MKS-KGSP51/25/St-00-20-03-A	51,5	122,9	117,9	20	3	1000	0,49
103187	MKS-KGSP51/25/St-00-20-20-A	59,3	117,9	117,9	20	20	1000	0,49
103185	MKS-KGSP51/25/St-00-51-03-A	58,8	123	103,5	51	3	1000	0,49
103100	MKS-KGSP51/25/St-00-51-51-A	73,7	103,5	103,5	51	51	1000	0,49
103099	MKS-KGSP51/25/St-00-70-03-A	69,5	123	92,8	70	3	1000	0,49

Description	Part No.
MKS-KGSP53/25/St-00-XX-XX-0	see table

Type: body steel, clamping orientation 0°, clamping type narrow, with sensor preparation IDS19, clamping lever arm up for clamping screw, clamping lever arm down plain for sensor, ports (P) G1/8

Material: body: steel; clamping lever arm: steel; seals: NBR

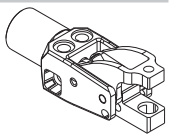

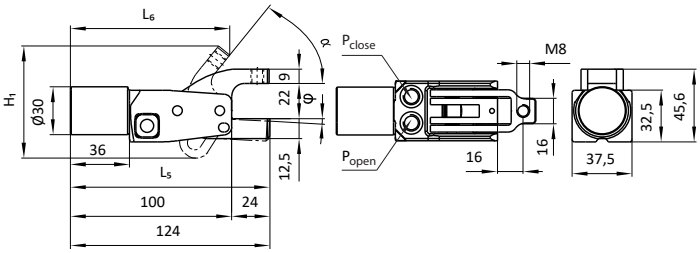

Part No.	Description	H_1 [mm]	L_5 [mm]	L_6 [mm]	α [°]	φ [°]	Clamping force [N]	m [kg]
103198	MKS-KGSP53/25/St-00-20-03-0	54,2	123,7	115,9	20	3	1000	0,51
105386	MKS-KGSP53/25/St-00-30-03-0	61,1	123,7	111	30	3	1000	0,51
103197	MKS-KGSP53/25/St-00-51-03-0	70,3	123,7	98,8	51	3	1000	0,51
107089	MKS-KGSP53/25/St-00-70-00-0	71,5	124	87,2	70	0,8*	1000	0,51
103103	MKS-KGSP53/25/St-00-70-03-0	71,5	123,7	87,2	70	3	1000	0,51

*technically conditioned

Description	Part No.
MKS-KGSP53/25/St-00-70-03-A	103104

Type: body steel, clamping orientation 0°, clamping type narrow, with sensor preparation IDS19, clamping lever arm up for jaw plate, clamping lever arm down plain for sensor, ports (P) G1/8

Material: body: steel; clamping lever arm: steel; seals: NBR

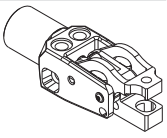

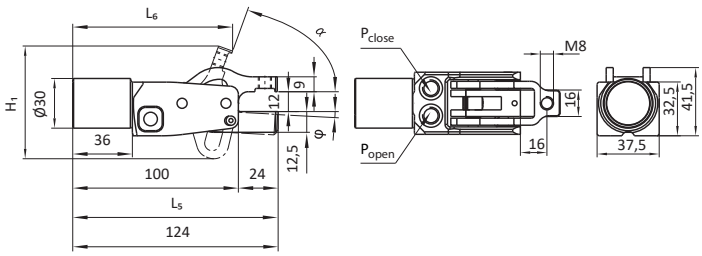

Part No.	Description	H_1 [mm]	L_5 [mm]	L_6 [mm]	α [°]	φ [°]	Clamping force [N]	m [kg]
103104	MKS-KGSP53/25/St-00-70-03-A	68,1	123,7	96,5	70	3	1000	0,51

Description	Part No.
MKS-KGSP53/25/St-00-XX-XX-0-35	see table

Type: body steel, clamping orientation 0°, clamping type narrow extended, with sensor preparation IDS19, clamping lever arm up for clamping screw, clamping lever arm down plain for sensor, ports (P) G1/8

Material: body: steel; clamping lever arm: steel; seals: NBR

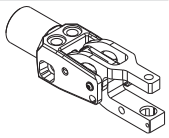

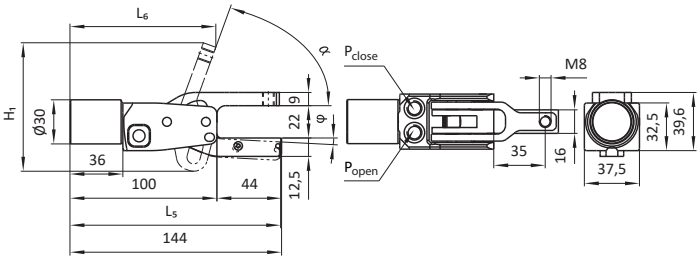

Part No.	Description	H_1 [mm]	L_5 [mm]	L_6 [mm]	α [°]	φ [°]	Clamping force [N]	m [kg]
107527	MKS-KGSP53/25/St-00-20-20-0-35	74,7	137,2	135,8	20	20	500	0,54
107528	MKS-KGSP53/25/St-00-51-0F-0-35	81	144	115,5	51	0	500	0,51
107534	MKS-KGSP53/25/St-00-70-03-0-35	87,5	143,4	99,3	70	3	500	0,51
107678	MKS-KGSP53/25/St-00-20-03-0-35	62	143,4	135,8	20	3	500	0,54

Jaw Gripper - compact type

Description	Part-No.
MKS-KGSP53/25/AL-00-20-0F-0-XX	see table

Type: body aluminium, clamping orientation 0°, clamping type extended, narrow, clamping lever arm up for clamping screw, clamping lever arm down for sensor, single side opened, ports (P) G1/8

Material: body: aluminium
clamping lever: steel
seals: NBR

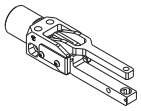

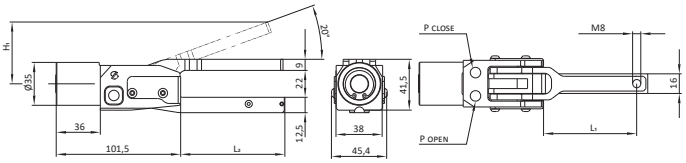

Part-No.	Description	clamping force [N]	H1 [mm]	L1 [mm]	L2 [mm]	m. [kg]
111557	MKS-KGSP53/25/AL-00-20-0F-0-50	230	41,5	50	59,5	0,494
111558	MKS-KGSP53/25/AL-00-20-0F-0-76	230	50,4	76	85,5	0,541

Description	Part-No.
MKS-KGSP52/25/AL-00-20-0F-0-XX	see table

Type: body aluminium, clamping orientation 0°, clamping type extended, wide, clamping lever arm up for clamping screw, clamping lever arm down for sensor, single side opened, ports (P) G1/8

Material: body: aluminium
clamping leve: steel
seals: NBR

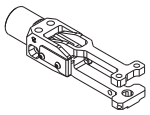

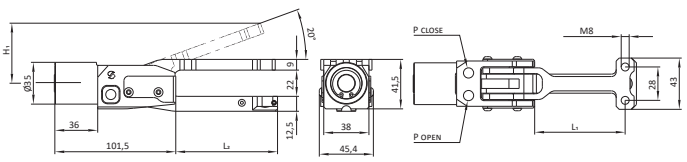

Part-No.	Description	clamping force [N]	H1 [mm]	L1 [mm]	L2 [mm]	m. [kg]
111559	MKS-KGSP52/25/AL-00-20-0F-0-50	230	41,5	50	59,5	0,543
111560	MKS-KGSP52/25/AL-00-20-0F-0-76	230	50,4	76	85,5	0,589

Description	Part No.
MKS-KGSP51/25/St-00-10-10-A-35	107686

Type: body steel, clamping orientation 0°, clamping type narrow, clamping lever arm up for jaw plate, clamping lever arm down for jaw plate, ports (P) G1/8

Material: body: steel
clamping lever arm: steel
seals: NBR

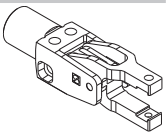

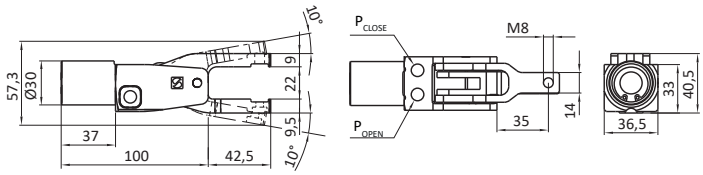

Part No.	Description	H_1 [mm]	L_5 [mm]	L_6 [mm]	α [°]	φ [°]	Clamping force [N]	m [kg]
107686	MKS-KGSP51/25/St-00-10-10-A-35	57,25	139,9	139,9	10	10	500	0,53

Jaw Gripper - compact type

Description	Part No.
MKS-KGSP50/25/St-90-XX-00-0-XX	see table

Type: body steel, clamping orientation 90°, clamping type wide, with sensor preparation IDS04, clamping lever arm up for clamping screw, clamping lever arm down plain with M8x1 for sensor, ports (P) G1/8

Material: body: steel; clamping lever arm: steel; seals: NBR

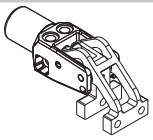

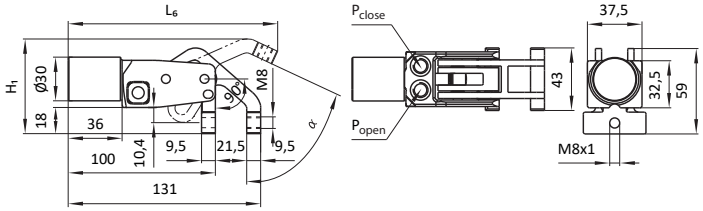

Part No.	Description	H_1 [mm]	L_6 [mm]	α [°]	Clamping force [N]	m [kg]	End position with self locking
103105	MKS-KGSP50/25/St-90-51-00-0	57,8	146	51	800	0,55	yes
104068	MKS-KGSP50/25/St-90-51-00-0-OS	57,8	146	51	240	0,55	no

Description	Part No.
MKS-KGSP50/25/St-90-51-00-A-XX	see table

Type: body steel, clamping orientation 90°, clamping type wide, with sensor preparation IDS04, clamping lever arm up for jaw plate, clamping lever arm down for jaw plate with M8x1 for sensor, ports (P) G1/8

Material: body: steel; clamping lever arm: steel; seals: NBR

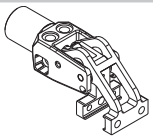

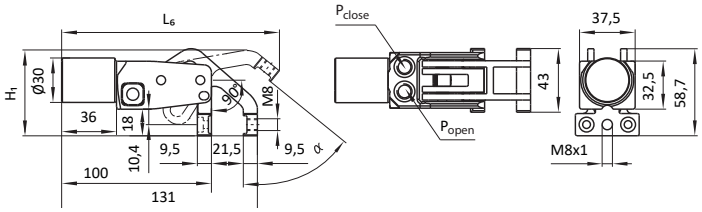

Part No.	Description	H_1 [mm]	L_6 [mm]	α [°]	Clamping force [N]	m [kg]	End position with self locking	Tempera-ture range
103106	MKS-KGSP50/25/St-90-51-00-A	58,8	146	51	800	0,56	yes	normal
106258	MKS-KGSP50/25/St-90-51-00-A-S2	58,8	146	51	800	0,56	yes	high
104069	MKS-KGSP50/25/St-90-51-00-A-OS	58,8	146	51	240	0,56	no	normal

normal: -5...+100°C / high: -5...+150°C

Description	Part No.
MKS-KGSP51/25/St-90-51-00-0-XX	see table

Type: body steel, clamping orientation 90°, clamping type narrow, clamping lever arm up for clamping screw, clamping lever arm down plain, ports (P) G1/8

Material: body: steel; clamping lever arm: steel; seals: NBR

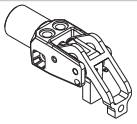

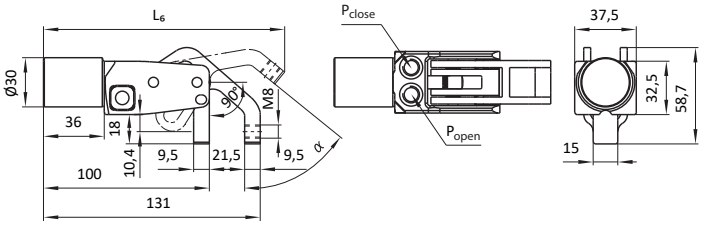

Part No.	Description	H_1 [mm]	L_6 [mm]	α [°]	Clamping force [N]	m [kg]	End position with self locking
103285	MKS-KGSP51/25/St-90-51-00-0	57,6	146	51	800	0,58	yes
104070	MKS-KGSP51/25/St-90-51-00-0-OS	65	142,8	51	240	0,52	no

Description	Part No.
MKS-KGSP51/25/St-90-51-00-A-XX	see table

Type: body steel, clamping orientation 90°, clamping type narrow, clamping lever arm up for jaw plate, clamping lever arm down for jaw plate, ports (P) G1/8

Material: body: steel; clamping lever arm: steel; seals: NBR

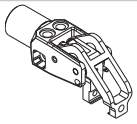

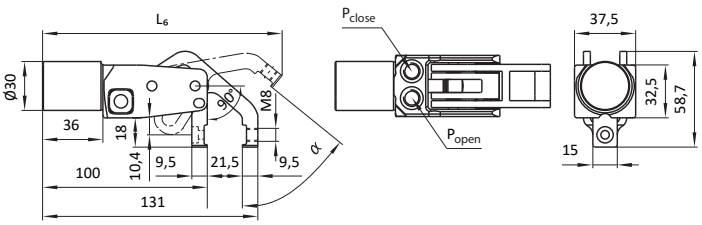

Part No.	Description	H_1 [mm]	L_6 [mm]	α [°]	Clamping force [N]	m [kg]	End position with self locking	Temperature range
103286	MKS-KGSP51/25/St-90-51-00-A	57,6	146	51	800	0,52	yes	normal
106463	MKS-KGSP51/25/St-90-51-00-A-S2	57,6	146	51	800	0,52	yes	high
104071	MKS-KGSP51/25/St-90-51-00-A-OS	57,6	146	51	240	0,52	no	normal

normal: -5...+100°C / high: -5...+150°C

Jaw Gripper - compact type

Description	Part No.
MKS-KGSP53/25/St-90-XX-00-0-XX-XX	see table

Type: body steel, clamping orientation 90°, clamping type narrow, with sensor preparation IDS04, clamping lever arm up for clamping screw, clamping lever arm down plain with M8x1 for sensor, ports (P) G1/8

Material: body: steel
clamping lever arm: steel
seals: NBR

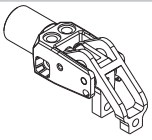

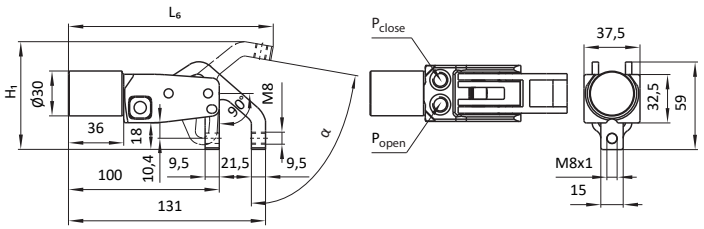

Part No.	Description	H_1 [mm]	L_6 [mm]	α [°]	Clamping force [N]	m [kg]	End position with self locking
103953	MKS-KGSP53/25/St-90-51-00-0-S1	57,6	146	51	800	0,52	yes
105390	MKS-KGSP53/25/St-90-80-00-0-S1	72,3	136,2	80	800	0,52	yes
107532	MKS-KGSP53/25/St-90-65-0F-0-S1	57,6	146	65	800	0,58	yes
104072	MKS-KGSP53/25/St-90-51-00-0-S1-OS	57,6	146	51	240	0,52	no

Description	Part No.
MKS-KGSP51/25/Al-90-51-D-M-XX	see table

Type: body aluminium, clamping orientation 90°, clamping type narrow, clamping lever arm up for toggle locator, ports (P) G1/8

Material: body: aluminium
clamping lever arm: steel
seals: NBR

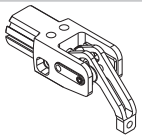

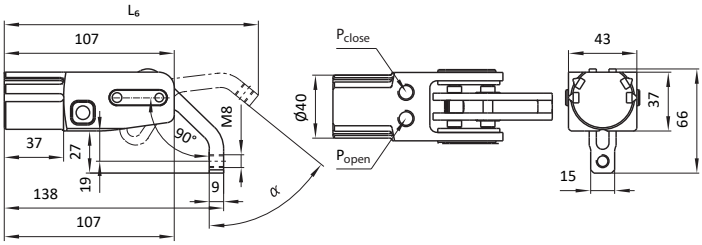

Part No.	Description	α [°]	Clamping force [N]	m [kg]	Sensor preparation
105667	MKS-KGSP51/25/Al-90-51-D-M	51	800	0,48	with magnet piston

Description	Part No.
MKS-KGSP51/XX/Al-90-51-00-D-M	see table

Type: body aluminium, clamping orientation 90°, clamping type narrow, clamping lever arm up for toggle locator, clamping lever arm down for toggle locator, with sensor preparation for piston query, ports (P) G1/8

Material: body: aluminium
clamping lever arm: steel
seals: NBR

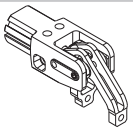

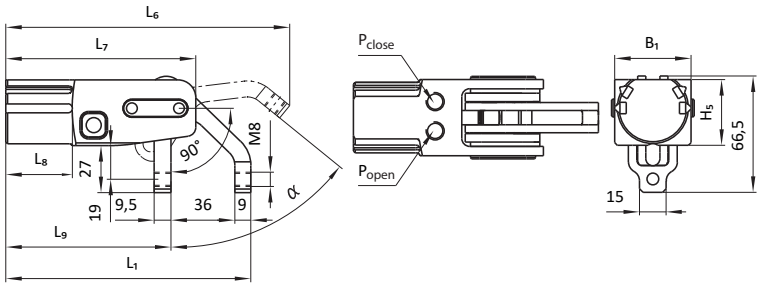

Part No.	Description	H_1 [mm]	H_5 [mm]	L_1 [mm]	L_6 [mm]	L_7 [mm]	L_8 [mm]	L_9 [mm]	B_1 [mm]	D_1 [mm]	α [°]	Clamping force [N]	m [kg]	Ø piston [mm]
105169	MKS-KGSP51/25/Al-90-51-00-D-M	63,5	37	138	160	107	36	93	43	40	51	800	0,55	25
106280	MKS-KGSP51/32/Al-90-51-00-D-M	66,5	40	134,5	159,4	111,5	40	89,5	47	47	51	1300	0,48	32

Jaw Gripper - compact type

Description	Part No.
MKS-KGSP50/20/Al-00-XX-XX-0	see table

Type: body aluminium, clamping orientation 0°, clamping type wide, clamping lever arm up for clamping screw, clamping lever arm down plain, ports (P) G1/8

Material: body: aluminium; clamping lever arm: steel; seals: NBR

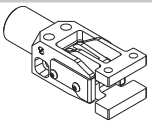

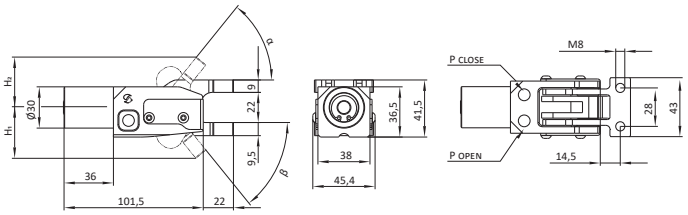

Part-No.	Description	H_1 [mm]	H_2 [mm]	α [°]	β [°]	clamping force [N]	m [kg]
111510	MKS-KGSP50/20/Al-00-20-0F-0	20,5	29,4	20	0	800	0,451
111511	MKS-KGSP50/20/Al-00-20-20-0	29,9	29,4	20	20	600	0,430
111512	MKS-KGSP50/20/Al-00-51-0F-0	29,8	36,7	51	0	800	0,448
111513	MKS-KGSP50/20/Al-00-51-51-0	37,0	36,7	51	51	600	0,432
111514	MKS-KGSP50/20/Al-00-70-0F-0	32,9	35,9	70	0	800	0,445

Description	Part No.
MKS-KGSP50/20/Al-00-XX-XX-A-XX	see table

Type: body aluminium, clamping orientation 0°, clamping type wide, clamping lever arm up for jaw plate, clamping lever arm down for jaw plate, ports (P) G1/8

Material: body: aluminium; clamping lever arm: steel; seals: NBR

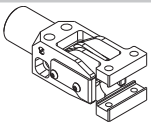

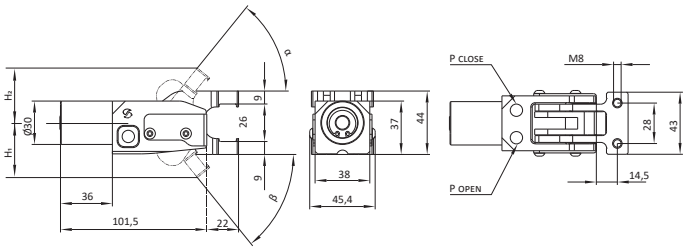

Part-No.	Description	H_1 [mm]	H_2 [mm]	α [°]	β [°]	clamping force [N]	m [kg]
111515	MKS-KGSP50/20/Al-00-20-0F-A	22,0	31,3	20	0	800	0,465
111516	MKS-KGSP50/20/Al-00-20-20-A	31,3	31,3	20	20	600	0,453
111517	MKS-KGSP50/20/Al-00-51-0F-A	29,8	37,9	51	0	800	0,462
111518	MKS-KGSP50/20/Al-00-51-51-A	37,9	37,9	51	51	600	0,447
111519	MKS-KGSP50/20/Al-00-70-0F-A	33,5	36,7	70	0	800	0,461

Description	Part No.
MKS-KGSP52/20/Al-00-XX-XX-0	see table

Type: body aluminium, clamping orientation 0°, clamping type wide, with sensor preparation IDS19, clamping lever arm up for clamping screw, clamping lever arm down plain for sensor, ports (P) G1/8

Material: body: aluminium; clamping lever arm: steel; seals: NBR

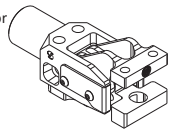

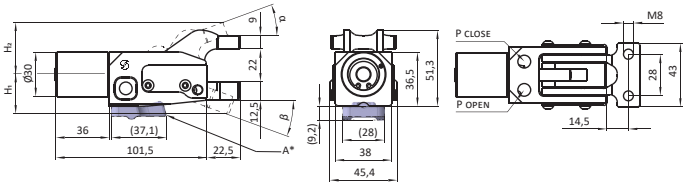

Part-No.	Description	H_1 [mm]	H_2 [mm]	α [°]	β [°]	clamping force [N]	m [kg]
111498	MKS-KGSP52/20/Al-00-20-20-0	27,2	35,0	20	20	600	0,447
111521	MKS-KGSP52/20/Al-00-20-0F-0	17,5	35,0	20	0	800	0,471
111522	MKS-KGSP52/20/Al-00-51-0F-0	29,8	40,5	51	0	800	0,467
111523	MKS-KGSP52/20/Al-00-70-0F-0	33,5	38,0	70	0	800	0,465

A*: strain relief 320851 (not included) is mandatory when using the inductive sensor

Description	Part No.
MKS-KGSP52/20/Al-00-XX-XX-A	see table

Type: body aluminium, clamping orientation 0°, clamping type wide, with sensor preparation IDS19, clamping lever arm up for jaw plate, clamping lever arm down plain for sensor, ports (P) G1/8

Material: body: aluminium; clamping lever arm: steel; seals: NBR

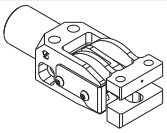

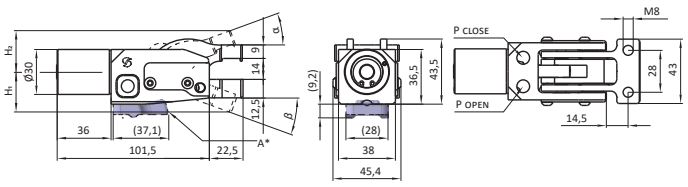

Part-No.	Description	H_1 [mm]	H_2 [mm]	α [°]	β [°]	clamping force [N]	m [kg]
111499	MKS-KGSP52/20/Al-00-20-20-A	27,2	27,5	20	20	600	0,443
111524	MKS-KGSP52/20/Al-00-20-0F-A	17,5	27,5	20	0	800	0,467
111525	MKS-KGSP52/20/Al-00-51-0F-A	29,8	35,4	51	0	800	0,464
111526	MKS-KGSP52/20/Al-00-70-0F-A	33,5	35,3	70	0	800	0,461

A*: strain relief 320851 (not included) is mandatory when using the inductive sensor

Jaw Gripper - compact type

Description	Part No.
MKS-KGSP52/20/Al-00-XX-XX-0-35	see table

Type: body aluminium, clamping orientation 0°, clamping type wide extended, with sensor preparation IDS19, clamping lever arm up for clamping screw, clamping lever arm down plain for sensor, ports (P) G1/8

Material: body: aluminium
clamping lever arm: steel
seals: NBR

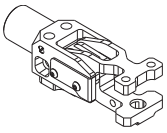

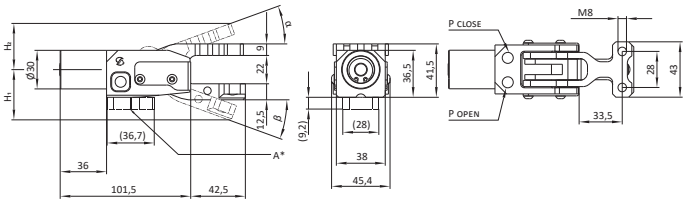

Part-No.	Description	H_1 [mm]	H_2 [mm]	α [°]	β [°]	clamping force [N]	m [kg]
111593	MKS-KGSP52/20/Al-00-20-0F-0-35	23,5	35,9	20	0	450	0,447
111703	MKS-KGSP52/20/Al-00-20-20-0-35	39,0	35,9	20	20	330	0,471
111765	MKS-KGSP52/20/Al-00-51-0F-0-35	29,7	51,4	51	0	450	0,467
111766	MKS-KGSP52/20/Al-00-70-0F-0-35	33,5	53,8	70	0	450	0,465

A*: strain relief 320851 (not included) is mandatory when using the inductive sensor

Description	Part No.
MKS-KGSP50/20/Al-00-XX-XX-A-35	see table

Type: body aluminium, clamping orientation 0°, clamping type wide extended, clamping lever arm up for jaw plate, clamping lever arm down for jaw plate, ports (P) G1/8

Material: body: aluminium
clamping lever arm: steel
seals: NBR

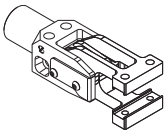

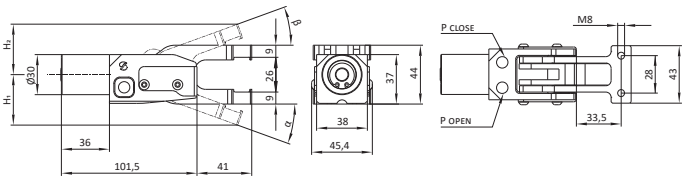

Part-No.	Description	H_1 [mm]	H_2 [mm]	α [°]	β [°]	clamping force [N]	m [kg]
111595	MKS-KGSP50/20/Al-00-20-0F-A-35	20,5	37,8	20	0	450	0,493
111598	MKS-KGSP50/20/Al-00-20-20-A-35	37,8	37,8	20	20	330	0,495
111596	MKS-KGSP50/20/Al-00-51-0F-A-35	29,7	52,7	51	0	450	0,489
111597	MKS-KGSP50/20/Al-00-70-0F-A-35	33,5	54,5	70	0	450	0,488

Description	Part-No.
MKS-KGSP54/20/AL-00-70-0F-0	111528

Type: body aluminium, clamping orientation 0°, clamping type wide, clamping lever arm up for clamping screw, clamping lever arm down recessed, for sensor, single side opened, ports (P) G1/8

Material: body: aluminium
clamping lever: steel
seals: NBR

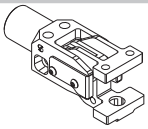

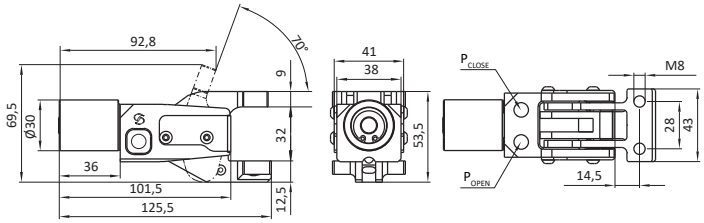

Part-No.	Description	Clamping force [N]	m [kg]
111528	MKS-KGSP54/20/AL-00-70-0F-0	400	0,43

Description	Part No.
MKS-KGSP52/20/Al-00-65-20-0-35-S1	111530

Type: body aluminium, clamping orientation 0°, clamping type wide extended, with sensor preparation IDS19, clamping lever arm up, cranked, for clamping screw, clamping lever arm down plain for sensor, ports (P) G1/8

Material: body: aluminium
clamping lever arm: steel
seals: NBR

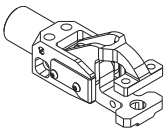

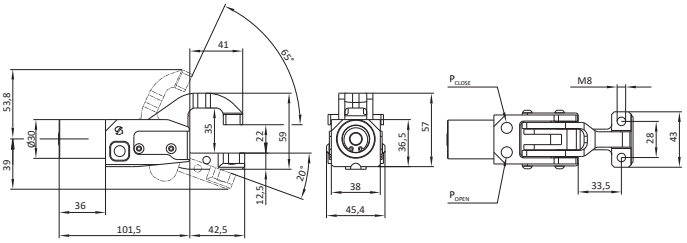

Part-No.	Description	Clamping force [N]	m [kg]
111530	MKS-KGSP52/20/Al-00-65-20-0-35-S1	330	0,489

Description	Part-No.
MKS-KGSP52/20/AL-45-70-0F-0	111529

Type: body aluminium, clamping orientation 45°, clamping type wide, clamping lever arm up for clamping screw, clamping lever arm down for sensor, single side opened, ports (P) G1/8

Material: body: Aluminium
clamping lever: Stahl
seals: NBR

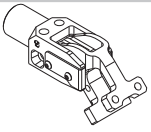

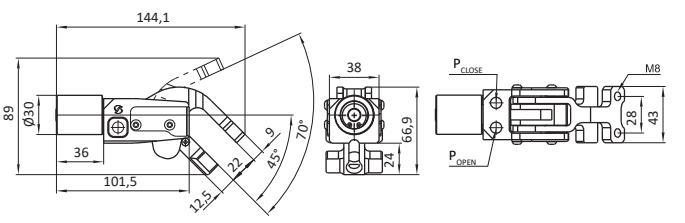

Part-No.	Description	Clamping force [N]	m [kg]
111529	MKS-KGSP52/20/AL-45-70-0F-0	200	0,476

Jaw Gripper - compact type

Description	Part-No.
MKS-KGSP51/20/Al-00-XX-XX-0	see table

Type: body aluminium, clamping orientation 0°, clamping type narrow, clamping lever arm up for clamping screw, clamping lever arm down plain, ports (P) G1/8

Material: body: aluminium; clamping lever arm: steel; seals: NBR

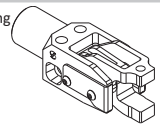

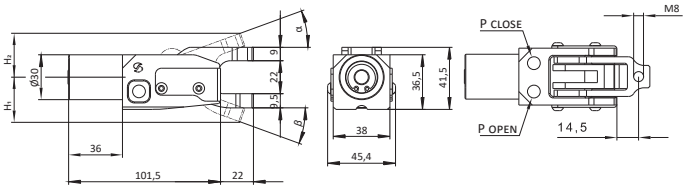

Part-No.	Description	H_1 [mm]	H_2 [mm]	α [°]	β [°]	clamping force [N]	m [kg]
111541	MKS-KGSP51/20/Al-00-20-0F-0	20,5	29,4	20	0	800	0,397
111542	MKS-KGSP51/20/Al-00-20-20-0	29,9	29,4	20	20	600	0,376
111543	MKS-KGSP51/20/Al-00-51-0F-0	29,8	36,7	51	0	800	0,393
111544	MKS-KGSP51/20/Al-00-51-51-0	37,0	36,7	51	51	600	0,377
111545	MKS-KGSP51/20/Al-00-70-0F-0	32,9	35,9	70	0	800	0,391

Bezeichnung	Artikel-Nr.
MKS-KGSP51/20/Al-00-XX-XX-A-XX	see table

Type: body aluminium, clamping orientation 0°, clamping type narrow, clamping lever arm up for jaw plate, clamping lever arm down for jaw plate, ports (P) G1/8

Material: body: aluminium; clamping lever arm: steel; seals: NBR

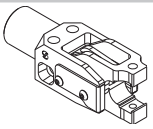

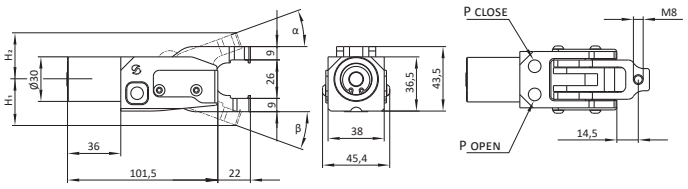

Part-No.	Description	H_1 [mm]	H_2 [mm]	α [°]	β [°]	clamping force [N]	m [kg]
111546	MKS-KGSP51/20/Al-00-20-0F-A	22,0	31,3	20	0	800	0,416
111547	MKS-KGSP51/20/Al-00-20-20-A	31,3	31,3	20	20	600	0,403
111548	MKS-KGSP51/20/Al-00-51-0F-A	29,8	37,9	51	0	800	0,410
111549	MKS-KGSP51/20/Al-00-51-51-A	37,9	37,9	51	51	600	0,394
111550	MKS-KGSP51/20/Al-00-70-0F-A	33,5	36,7	70	0	800	0,408

Description	Part-No.
MKS-KGSP53/20/Al-00-XX-XX-0	see table

Type: body aluminium, clamping orientation 0°, clamping type narrow, with sensor preparation IDS19, clamping lever arm up for clamping screw, clamping lever arm down plain for sensor, ports (P) G1/8

Material: body: aluminium; clamping lever arm: steel; seals: NBR

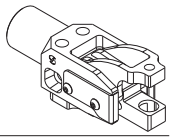

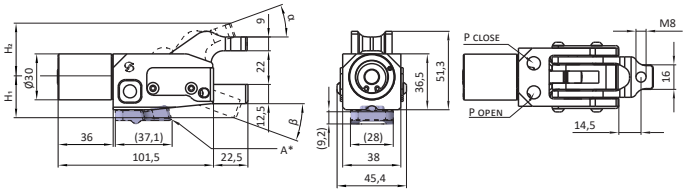

Part-No.	Description	H_1 [mm]	H_2 [mm]	α [°]	β [°]	clamping force [N]	m [kg]
111480	MKS-KGSP53/20/Al-00-20-20-0	27,2	35,0	20	20	600	0,382
111552	MKS-KGSP53/20/Al-00-20-0F-0	17,5	35,0	20	0	800	0,416
111553	MKS-KGSP53/20/Al-00-30-0F-0	23,0	38,0	30	0	800	0,413
111554	MKS-KGSP53/20/Al-00-51-0F-0	29,8	40,5	51	0	800	0,416
111555	MKS-KGSP53/20/Al-00-70-0F-0	33,5	38,0	70	0	800	0,410

A*: strain relief 320851 (not included) is mandatory when using the inductive sensor

Description	Part-No.
MKS-KGSP53/20/Al-00-70-0F-A	see table

Type: body aluminium, clamping orientation 0°, clamping type narrow, with sensor preparation IDS19, clamping lever arm up for jaw plate, clamping lever arm down plain for sensor, ports (P) G1/8

Material: body: aluminium; clamping lever arm: steel; seals: NBR

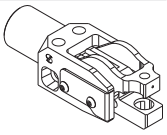

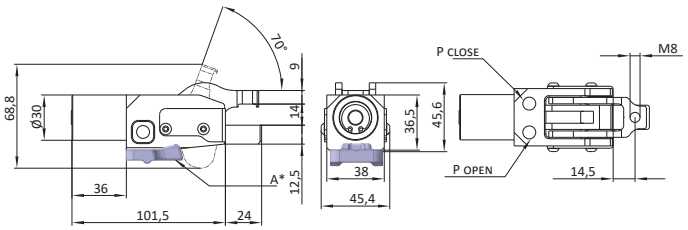

Part-No.	Description	clamping force [N]	m [kg]
111556	MKS-KGSP53/20/Al-00-70-0F-A	800	0,406

A*: strain relief 320851 (not included) is mandatory when using the inductive sensor

Jaw Gripper - compact type

Description	Part-No.
MKS-KGSP53/20/Al-00-XX-XX-0-35	see table

Type: body aluminium, clamping orientation 0°, clamping type narrow extended, with sensor preparation IDS19, clamping lever arm up for clamping screw, clamping lever arm down plain for sensor, ports (P) G1/8

Material: body: aluminium
clamping lever arm: steel
seals: NBR

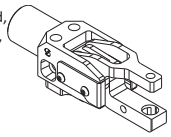

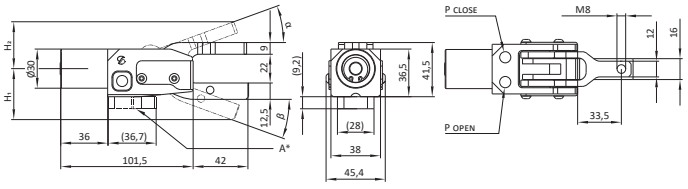

Part-No.	Description	H_1 [mm]	H_2 [mm]	α [°]	β [°]	clamping force [N]	m [kg]
111588	MKS-KGSP53/20/Al-00-20-0F-0-35	23,5	35,9	20	0	450	0,447
111000	MKS-KGSP53/20/Al-00-20-20-0-35	39,0	35,9	20	20	330	0,471
111767	MKS-KGSP53/20/Al-00-51-0F-0-35	29,1	51,4	51	0	450	0,467
111768	MKS-KGSP53/20/Al-00-70-0F-0-35	33,1	53,8	70	0	450	0,465

Description	Part-No.
MKS-KGSP50/20/Al-00-XX-XX-A-35	see table

Type: body aluminium, clamping orientation 0°, clamping type narrow extended, clamping lever arm up for jaw plate, clamping lever arm down for jaw plate, ports (P) G1/8

Material: body: aluminium
clamping lever arm: steel
seals: NBR

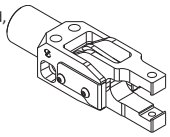

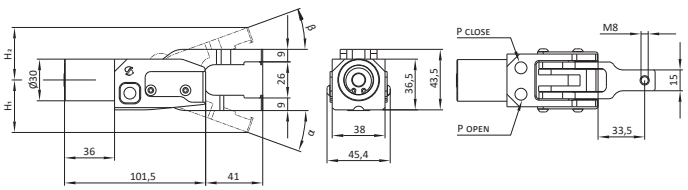

Part-No.	Description	H_1 [mm]	H_2 [mm]	α [°]	β [°]	clamping force [N]	m [kg]
111589	MKS-KGSP51/20/Al-00-20-0F-A-35	20,5	35,9	20	0	450	0,454
111592	MKS-KGSP51/20/Al-00-20-20-A-35	37,8	35,9	20	20	330	0,452
111590	MKS-KGSP51/20/Al-00-51-0F-A-35	29,7	52,7	51	0	450	0,449
111591	MKS-KGSP51/20/Al-00-70-0F-A-35	33,5	54,5	70	0	450	0,446

A*: strain relief 320851 (not included) is mandatory when using the inductive sensor

Description	Part-No.
MKS-KGSP55/20/AL-00-70-0F-0	111527

Type: body aluminium, clamping orientation 0°, clamping type narrow, clamping lever arm up for clamping screw, clamping lever arm down recessed, for sensor, single side opened, ports (P) G1/8, piston Ø20mm

Material: body: aluminium
clamping lever: steel
seals: NBR

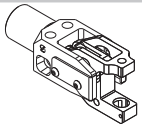

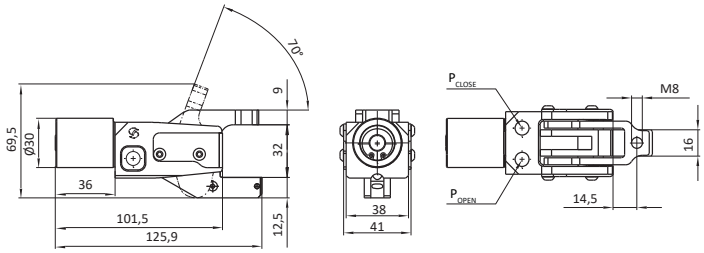

Part-No.	Description	Clamping force [N]	m [kg]
111527	MKS-KGSP55/20/AL-00-70-0F-0	400	0,393

Description	Part-No.
MKS-KGSP53/20/AL-45-70-0F-0	111586

Type: body aluminium, clamping orientation 45°, clamping type narrow, clamping lever arm up for clamping screw, clamping lever arm down for sensor, single side opened, ports (P) G1/8, piston Ø20mm

Material: body: Aluminium
clamping lever: steel
seals: NBR

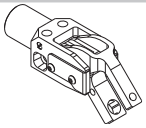

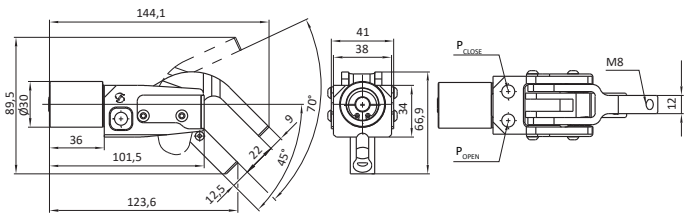

Part-No.	Description	Clamping force [N]	m [kg]
111586	MKS-KGSP53/20/AL-45-70-0F-0	200	0,42

Sliding Link Gripper

Description	Part No.
MKS-KGSP4X-45-0	see table

Type: sliding link gripper

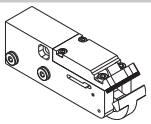

Material: body: aluminium
clamping lever arm: steel
seals: NBR

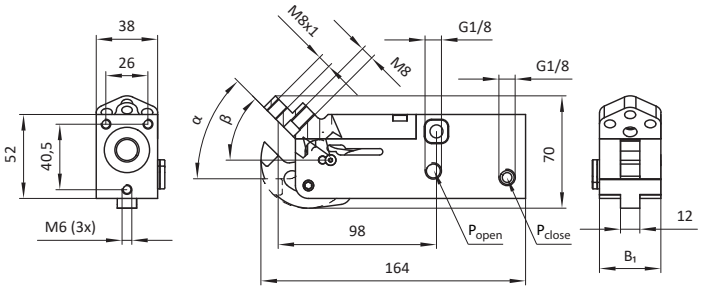

Part No.	Description	B_1 [mm]	α [°]	β [°]	m [kg]
102472	MKS-KGSP40-45-0	12	45°	45°	0,83
102473	MKS-KGSP41-45-0	38	45°	45°	0,84

Gripper Mounting (Jaw Gripper - compact type & Sliding Link Gripper)

Description	Part No.
MKS-GB127-X-XX	see table

Type: ball with square cone, with thread

Material: see table

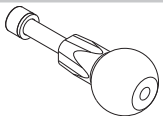

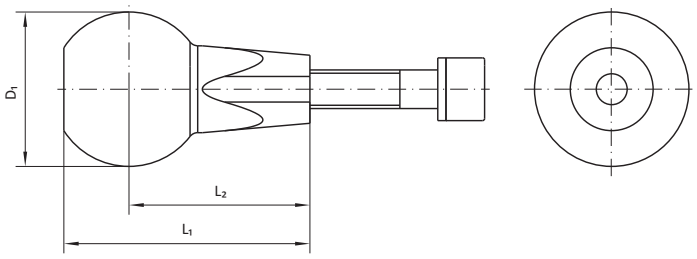

Part No.	Description	D_1 [mm]	L_1 [mm]	L_2 [mm]	Material	m [kg]
102719	MKS-GB127-2	28,5	45,9	33,5	D	0,13
103000	MKS-GB127-2-AL	28,5	45,9	33,5	A	0,06
107634	MKS-GB127-2-G	28,5	45,9	33,5	H	0,14
102718	MKS-GB127-1	32	51	37,5	D	0,18
102999	MKS-GB127-1-AL	32	51	37,5	A	0,08
102474	MKS-GB127	36	58,5	43,5	D	0,25
102998	MKS-GB127-AL	36	58,5	43,5	A	0,10

Description	Part No.
MKS-GB127-X-XX	see table

Type: ball with square cone, with passage hole

Material: see table

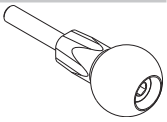

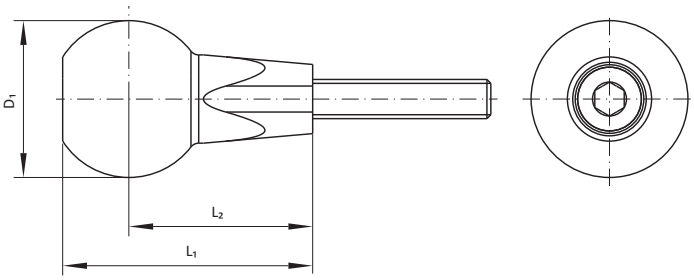

Part No.	Description	D_1 [mm]	L_1 [mm]	L_2 [mm]	Material	m [kg]
105631	MKS-GB127-3	28,5	44,9	33,5	D	0,13
105632	MKS-GB127-3-AL	28,5	44,9	33,5	A	0,65
105633	MKS-GB127-4	32	51	37,5	D	0,17
105634	MKS-GB127-4-AL	32	51	37,5	A	0,80
105635	MKS-GB127-5	36	58,5	43,5	D	0,23
105636	MKS-GB127-5-AL	36	58,5	43,5	A	0,10

Description	Part No.
MKS-GBXXX-X-XX	see table

Type: ball with square cone, staggered, with thread

Material: steel

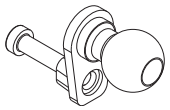

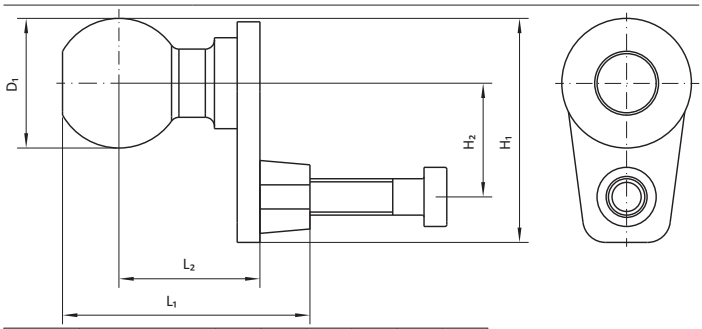

Part No.	Description	D_1 [mm]	H_1 [mm]	H_2 [mm]	L_1 [mm]	L_2 [mm]	m [kg]
104190	MKS-GB138-2	28,5	49,3	25	54,4	31	0,17
107854	MKS-GB149-1-K32	32	61,5	36	62,1	38,1	0,17

Description	Part No.
MKS-GB149-W20	107752

Type: rod journal with square cone, staggered, with thread

Material: steel

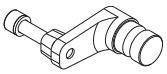

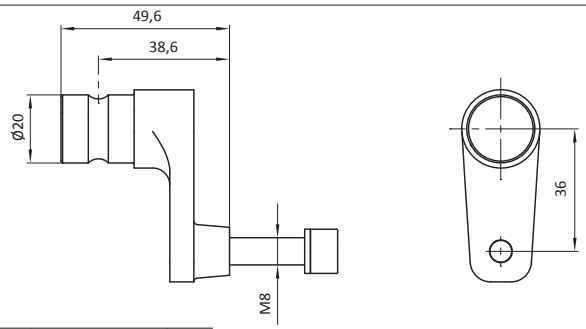

Part No.	Description	m [kg]
107752	MKS-GB149-W20	0,14

Description	Part No.
MKS-GB149-K32	107753

Type: ball with square cone, staggered, with thread

Material: steel

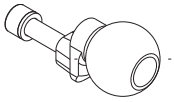

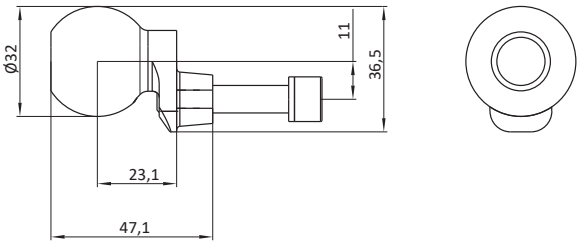

Part No.	Description	m [kg]
107753	MKS-GB149-K32	0,17

Material
A → aluminium
D → steel

Gripper Mounting (Jaw Gripper - compact type & Sliding Link Gripper)

Description	Part No.
MKS3X-GB132-X-XX	see table

Type: ball with clamp fixed, Montage radial

Material: see table

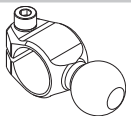

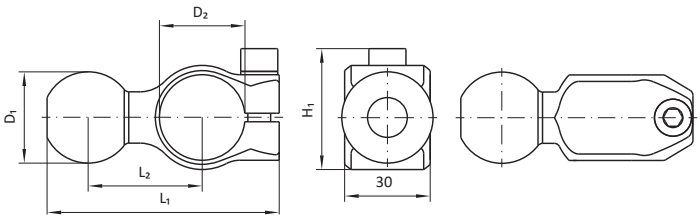

Part No.	Description	D_1 [mm]	D_2 [mm]	H_1 [mm]	L_1 [mm]	L_2 [mm]	Material	m [kg]	Permitted torque [Nm]
103215	MKS30-GB132-2	28,5	30	42,4	79,4	40	D	0,27	40
103218	MKS30-GB132-2-AL	28,5	30	42,4	79,4	40	A	0,10	34
103214	MKS30-GB132-1	32	30	42,4	81,4	40	D	0,29	40
103217	MKS30-GB132-1-AL	32	30	42,4	81,4	40	A	0,11	34
103213	MKS30-GB132	36	30	42,4	88,4	45	D	0,35	40
103216	MKS30-GB132-AL	36	30	42,4	88,4	45	A	0,14	34
111587	MKS35-GB132-2-AL	28,5	35	44	85,4	42,5	A	0,12	34
111663	MKS35-GB132-1-AL	32	35	44	87,4	42,5	A	0,14	34
111662	MKS35-GB132-AL	36	35	44	91,9	45	A	0,16	34

Description	Part No.
MKS30/XX-PV01-XX-AL-FL	see table

Type: tube connection 1: clamp splitted with ball eye joint
tube connection 2: clamp splitted 90°, standard type

Material: aluminium

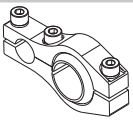

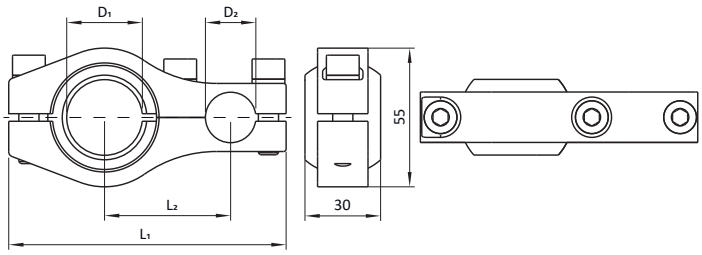

Part No.	Description	D_1 [mm]	D_2 [mm]	L_1 [mm]	L_2 [mm]	m [kg]
106477	MKS30/20-PV01-50-AL-FL	30	20	110	50	0,21
107726	MKS30/30-PV01-80-AL-FL	30	30	146	80	0,21

Description	Part No.
MKS30-GB135-KAR	103363

Type: clamp seat with flange, assembly rear end, for KGSP4X

Material: steel

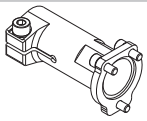

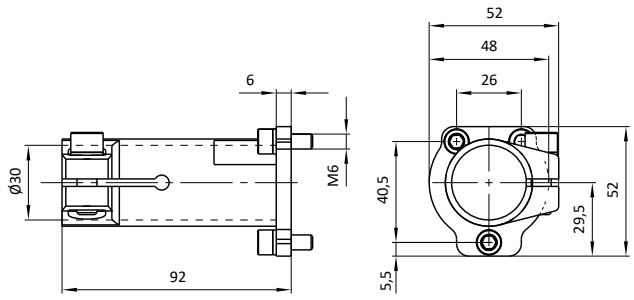

Part No.	Description	m [kg]
103363	MKS30-GB135-KAR	0,29

Material
A → aluminium
D → steel

Technical changes and errors are subject to change without notice!
www.springer.group
Document Date: CW 16.2025

Strain Relief

Description	Part No.
MKS-SCH12	103219

Type: strain relief

Material: composite

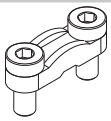

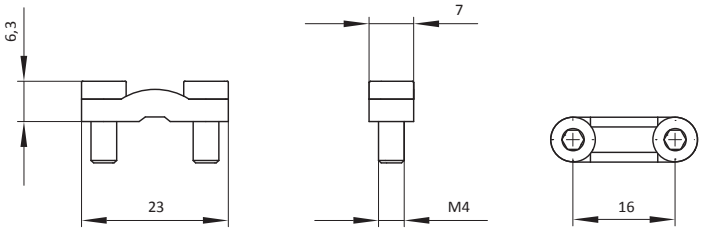

Part No.	Description	m [kg]
103219	MKS-SCH12	0,01

Description	Part No.
Strain relief	320851

Type: strain relief for jaw grippers for series MKS-KGSP5xx with clamping levers that open on both sides

Material: POM (plastic)

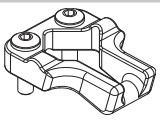

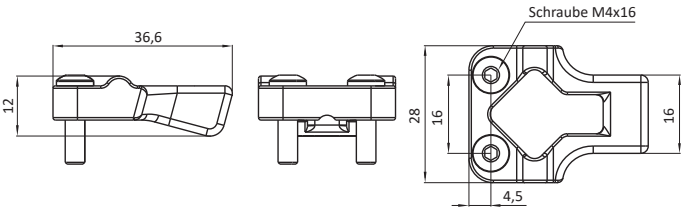

Part No.	Description	m [kg]
320851	Strain relief	0,008

Clamping Screw

Description	Part No.
MKS-SPS05-XX	see table

Type: with tip, with hexagon surface, single part

Material: steel

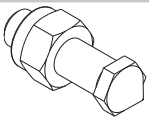

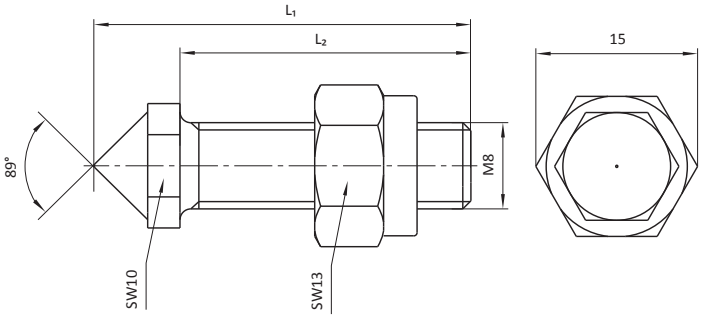

Part No.	Description	L_1 [mm]	L_2 [mm]	m [kg]
14333	MKS-SPS05-35	35	27	0,02
16133	MKS-SPS05-40	40	32	0,02
15603	MKS-SPS05-45	45	37	0,02
100871	MKS-SPS05-55	55	47	0,03

Description	Part No.
MKS-SPS05-1-XX	see table

Type: with tip, with internal hexagon surface, single part

Material: steel

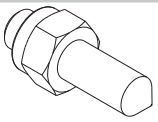

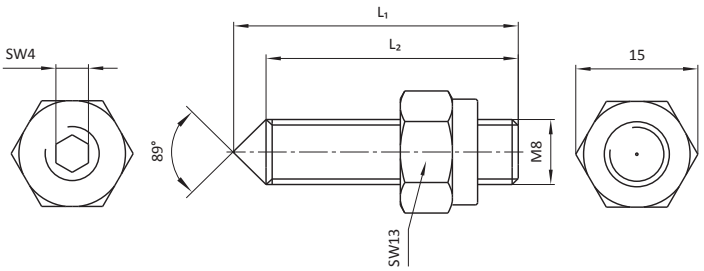

Part No.	Description	L_1 [mm]	L_2 [mm]	m [kg]
106490	MKS-SPS05-1-35	35	31	0,02
106492	MKS-SPS05-1-40	40	36	0,02
106491	MKS-SPS05-1-45	45	41	0,02
106493	MKS-SPS05-1-55	55	51	0,03

Description	Part No.
MKS-SPS11-XX	see table

Type: with ball, with spanner flat, single part

Material: steel

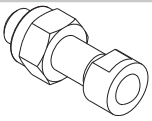

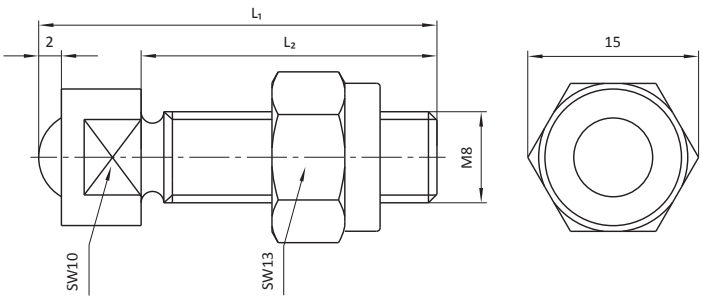

Part No.	Description	L_1 [mm]	L_2 [mm]	m [kg]
19979	MKS-SPS11-20	20	11	0,01
19957	MKS-SPS11-35	35	26	0,02
103435	MKS-SPS11-40	40	31	0,02
101338	MKS-SPS11-45	45	36	0,03

Description	Part No.
MKS-SPS15-40	107452

Type: with toggle locator and prism serration, with hexagon surface, single part

Material: steel

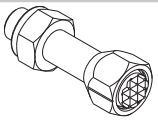

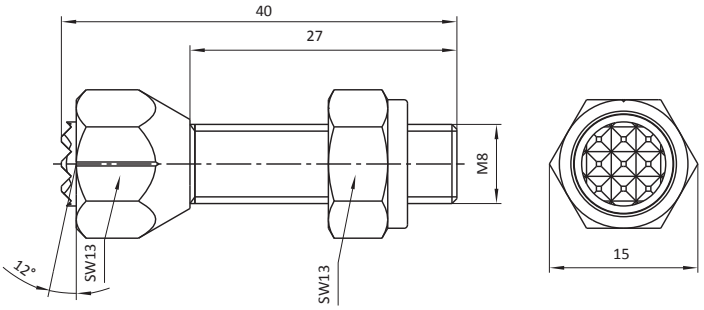

Part No.	Description	m [kg]
107452	MKS-SPS15-40	0,03

Clamping Screw

Description	Part No.
MKS-SPS01-1-XX	see table

Type: with circle serration, with internal hexagon surface, single part

Material: steel

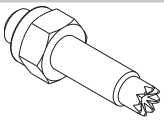

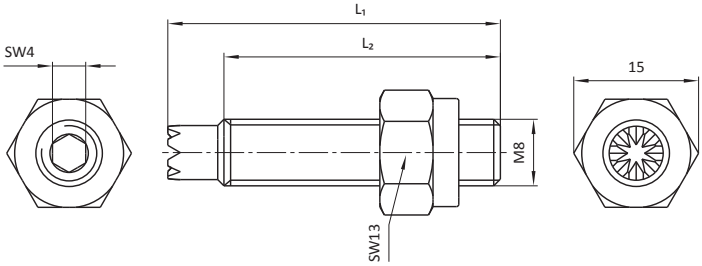

Part No.	Description	L_1 [mm]	L_2 [mm]	m [kg]
106579	MKS-SPS01-1-35	35	28	0,02
106580	MKS-SPS01-1-40	40	33	0,02
106581	MKS-SPS01-1-45	45	38	0,02
106582	MKS-SPS01-1-55	55	48	0,03

Description	Part No.
MKS-SPS01-XX	see table

Type: with prism serration, with spanner flat, single part

Material: steel

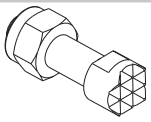

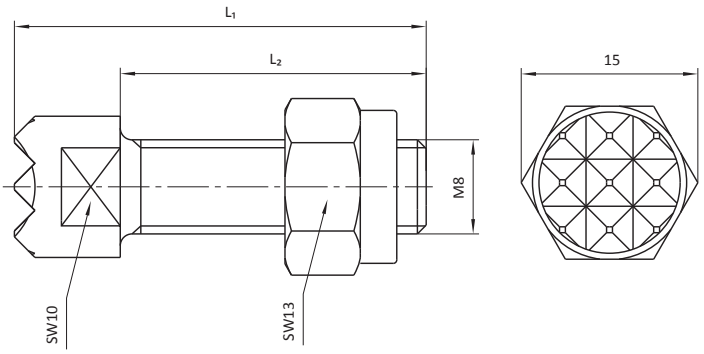

Part No.	Description	L_1 [mm]	L_2 [mm]	m [kg]
13129	MKS-SPS01-35	35	26	0,02
102749	MKS-SPS01-40	40	31	0,03
16467	MKS-SPS01-45	45	36	0,03
100870	MKS-SPS01-55	55	46	0,03

Description	Part No.
MKS-SPS13-X-XX	see table

Type: with vulcanized head, with hexagon surface, single part / segmented

Material: screw: stainless steel
head: polyurethane

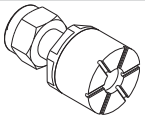

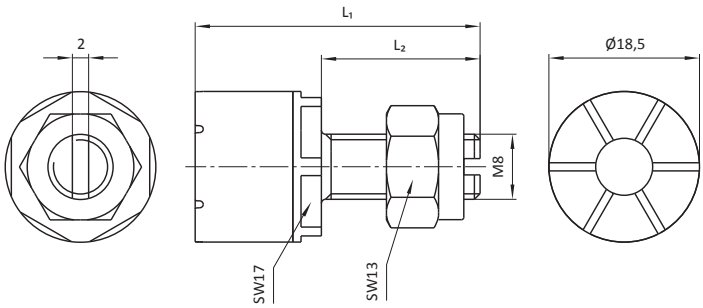

Part No.	Description	L_1 [mm]	L_2 [mm]	m [kg]	Type
103074	MKS-SPS13-35	35	19,5	0,03	single part
102750	MKS-SPS13-40	40	24,5	0,03	single part
100782	MKS-SPS13-45	45	29,5	0,03	single part
102267	MKS-SPS13-55	55	39,5	0,04	single part
105225	MKS-SPS13-1-42	42	26,5	0,03	segmented

Description	Part No.
MKS-SPS14-X-XX	see table

Type: with ring prism serration, with spanner flat, single part / segmented

Material: steel

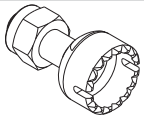

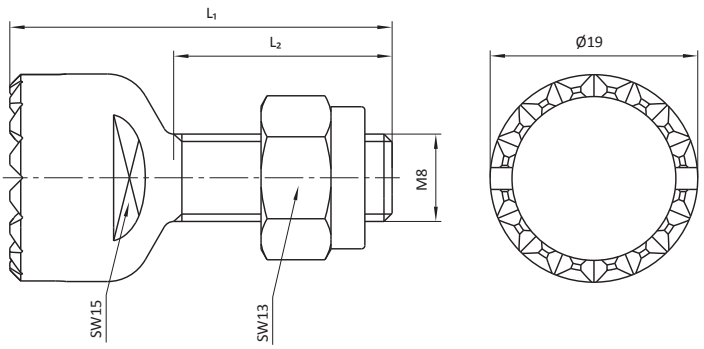

Part No.	Description	L_1 [mm]	L_2 [mm]	m [kg]	Type
103075	MKS-SPS14-35	35	20	0,03	single part
102751	MKS-SPS14-40	40	25	0,03	single part
101991	MKS-SPS14-45	45	30	0,04	single part
102268	MKS-SPS14-55	55	40	0,04	single part
105229	MKS-SPS14-1-42	42	27	0,03	segmented

Jaw Plate

Description	Part No.
MKS-KBSPXX-X	see table

Type: wide, with groove

Material: steel

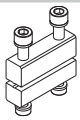

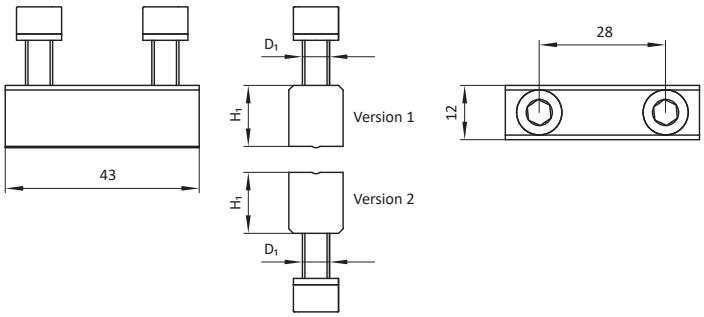

Part No.	Description	D_1 [mm]	H_1 [mm]	m [kg]	For plate thickness	Mounting position on clamping lever arm	Version
16686	MKS-KBSP16-1	M6	13,5	0,06	0,5 to 1,0	up	1
16687	MKS-KBSP16-2	M6	13	0,06	more than 1,0 to 1,5	up	1
16688	MKS-KBSP16-3	M6	12,5	0,06	more than 1,5 to 2,0	up	1
17714	MKS-KBSP16-4	M6	12	0,06	more than 2,0 to 2,5	up	1
16689	MKS-KBSP17	M5	11,5	0,05	-	down	2

Description	Part No.
MKS-KBSPXX-X	see table

Type: narrow, with groove

Material: steel

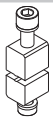

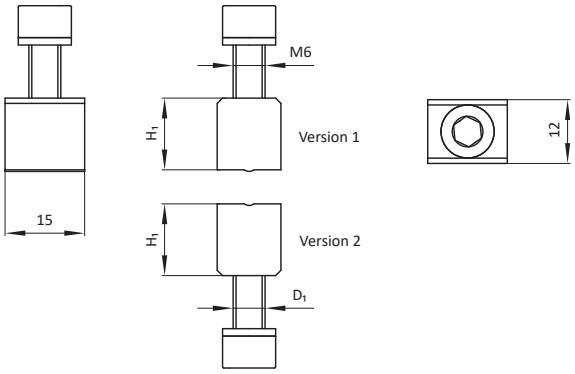

Part No.	Description	D_1 [mm]	H_1 [mm]	m [kg]	For plate thickness	Mounting position on clamping lever arm	Version
16674	MKS-KBSP10-1	M6	13,5	0,03	0,5 to 1,0	up	1
16675	MKS-KBSP10-2	M6	13	0,03	more than 1,0 to 1,5	up	1
16676	MKS-KBSP10-3	M6	12,5	0,03	more than 1,5 to 2,0	up	1
17713	MKS-KBSP10-4	M6	12	0,03	more than 2,0 to 2,5	up	1
16677	MKS-KBSP11	M5	11,5	0,03	-	down	2

Description	Part No.
MKS-KBSPXX-X	see table

Type: wide, with serration

Material: steel

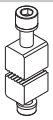

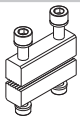

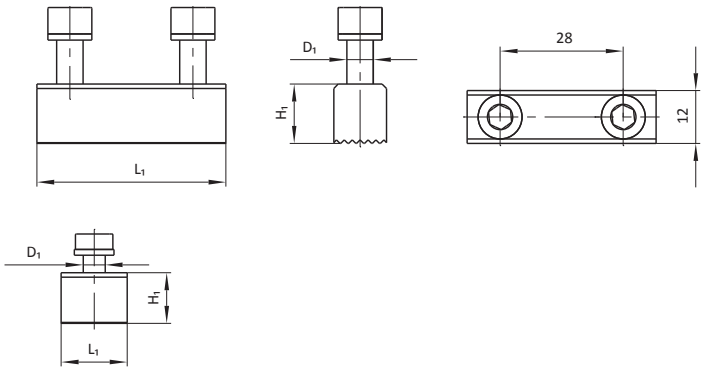

Part No.	Description	D_1 [mm]	H_1 [mm]	L_1 [mm]	m [kg]	For plate thickness	Mounting position on clamping lever arm
16690	MKS-KBSP18-1	M6	13,5	43	0,06	0,5 to 1,0	up
16691	MKS-KBSP18-2	M6	13	43	0,06	more than 1,0 to 1,5	up
16692	MKS-KBSP18-3	M6	12,5	43	0,06	more than 1,5 to 2,0	up
17855	MKS-KBSP18-4	M6	12	43	0,05	more than 2,0 to 2,5	up
16693	MKS-KBSP19	M5	11,5	43	0,05	-	down
16678	MKS-KBSP12-1	M6	13,5	15	0,02	0,5 to 1,0	up
16679	MKS-KBSP12-2	M6	13	15	0,02	more than 1,0 to 1,5	up
16680	MKS-KBSP12-3	M6	12,5	15	0,02	more than 1,5 to 2,0	up
17853	MKS-KBSP12-4	M6	12	15	0,02	more than 2,0 to 2,5	up
16681	MKS-KBSP13	M5	11,5	15	0,02	-	down

Description	Part No.
MKS-KBSP04-X	see table

Type: wide, with hole for component query

Material: steel

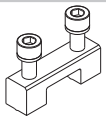

Part No.	Description	H_1 [mm]	m [kg]	For plate thickness	Mounting position on clamping lever arm
16662	MKS-KBSP04-1	13,5	0,05	0,5 to 1,0	up
16663	MKS-KBSP04-2	13	0,05	more than 1,0 to 1,5	up
16664	MKS-KBSP04-3	12,5	0,04	more than 1,5 to 2,0	up
17712	MKS-KBSP04-4	12	0,02	more than 2,0 to 2,5	up

Jaw Plate

Description	Part No.
MKS-KBSP02-X	see table

Type: wide, with flat gripping surface, with hole for component query

Material: steel

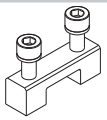

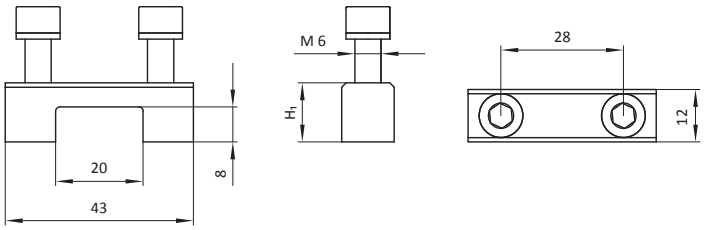

Part No.	Description	H_1 [mm]	m [kg]	For plate thickness	Mounting position on clamping lever arm
16658	MKS-KBSP02-1	13,5	0,05	0,5 to 1,0	up
16659	MKS-KBSP02-2	13	0,05	more than 1,0 to 1,5	up
16660	MKS-KBSP02-3	12,5	0,03	more than 1,5 to 2,0	up
17850	MKS-KBSP02-4	12	0,05	more than 2,0 to 2,5	up

Description	Part No.
MKS-KBSP06-X	see table

Type: wide, with serration, with hole for component query

Material: steel

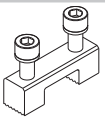

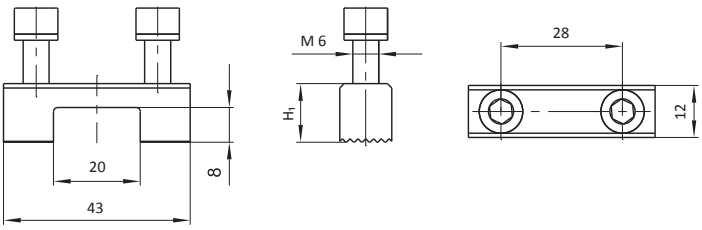

Part No.	Description	H_1 [mm]	m [kg]	For plate thickness	Mounting position on clamping lever arm
16666	MKS-KBSP06-1	13,5	0,05	0,5 to 1,0	up
16667	MKS-KBSP06-2	13	0,03	more than 1,0 to 1,5	up
16668	MKS-KBSP06-3	12,5	0,05	more than 1,5 to 2,0	up
17851	MKS-KBSP06-4	12	0,04	more than 2,0 to 2,5	up

Description	Part No.
MKS-KBSPXX-X	see table

Type: wide, flat gripping surface

Material: steel

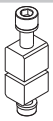

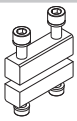

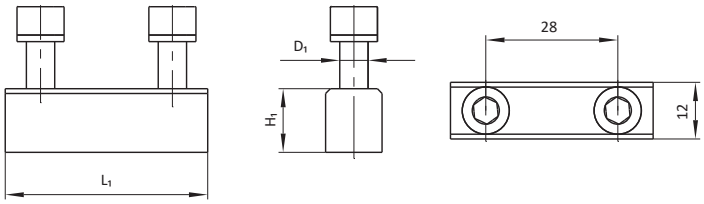

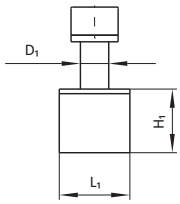

Part No.	Description	D_1 [mm]	H_1 [mm]	L_1 [mm]	m [kg]	for plate thickness	Mounting position on clamping lever arm
16682	MKS-KBSP14-1	M6	13,5	43	0,06	0,5 to 1,0	up
16683	MKS-KBSP14-2	M6	13	43	0,06	more than 1,0 to 1,5	up
16684	MKS-KBSP14-3	M6	12,5	43	0,06	more than 1,5 to 2,0	up
17854	MKS-KBSP14-4	M6	12	43	0,06	more than 2,0 to 2,5	up
16685	MKS-KBSP15	M5	11,5	43	0,05	-	down
16670	MKS-KBSP08-1	M6	13,5	15	0,02	0,5 to 1,0	up
16671	MKS-KBSP08-2	M6	13	15	0,02	more than 1,0 to 1,5	up
16672	MKS-KBSP08-3	M6	12,5	15	0,02	more than 1,5 to 2,0	up
17852	MKS-KBSP08-4	M6	12	15	0,03	more than 2,0 to 2,5	up
16673	MKS-KBSP09	M5	11,5	15	0,02	-	down

Description	Part No.
MKS-KBSP26	102492

Type: with serration, for sliding link gripper

Material: steel

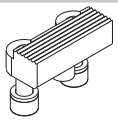

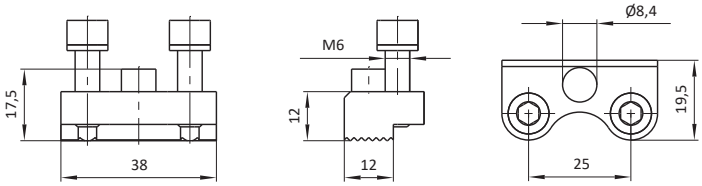

Part No.	Description	m [kg]
102492	MKS-KBSP26	0,06

Jaw Plate

Description	Part No.
MKS-KBSP03	16661

Type: wide, with flat gripping surface, with hole for component query, extended

Material: steel

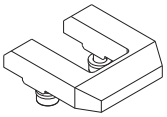

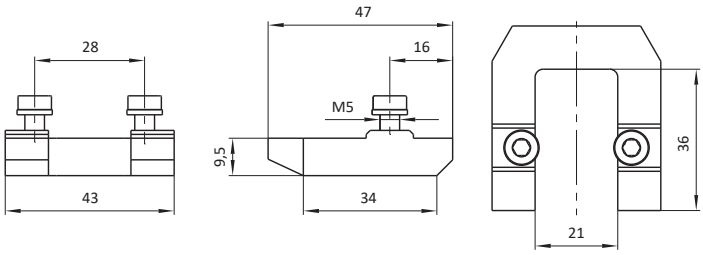

Part No.	Description	m [kg]
16661	MKS-KBSP03	0,09

Description	Part No.
MKS-KBSP07	16669

Type: with serration, extended

Material: steel

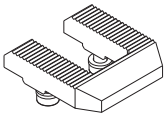

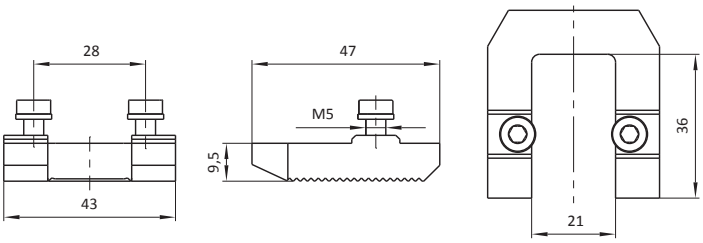

Part No.	Description	m [kg]
16669	MKS-KBSP07	0,09

Description	Part No.
MKS-KBSP05	16665

Type: wide, with hole for component query, extended

Material: steel

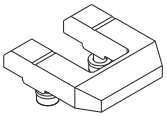

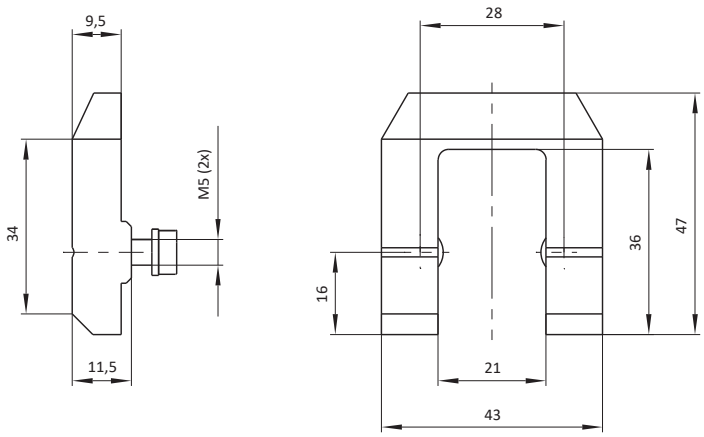

Part No.	Description	m [kg]
16665	MKS-KBSP05	0,09

Spacer Plate

Description	Part No.
MKS-APSP01-0X	see table

Type: spacer plate for MKS-KGSP41-...

Material: stainless steel



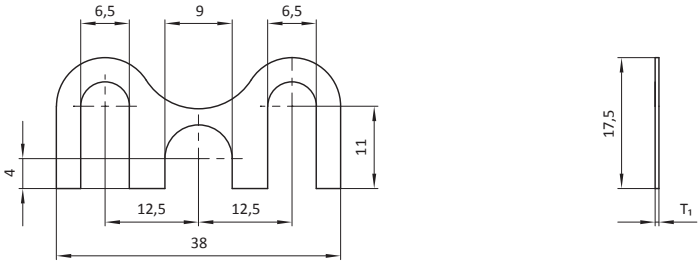

Part No.	Description	T_1 [mm]	m [kg]
102494	MKS-APSP01-02	0,2	0,001
102495	MKS-APSP01-05	0,5	0,001

Jaw Gripper Manual (spring pre-loaded)

Description	Part No.
MKS20-KGSP32-300	101712

Type: with pre-loaded spring, with roll lever arm

Material: material mix

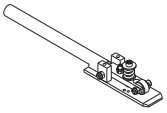

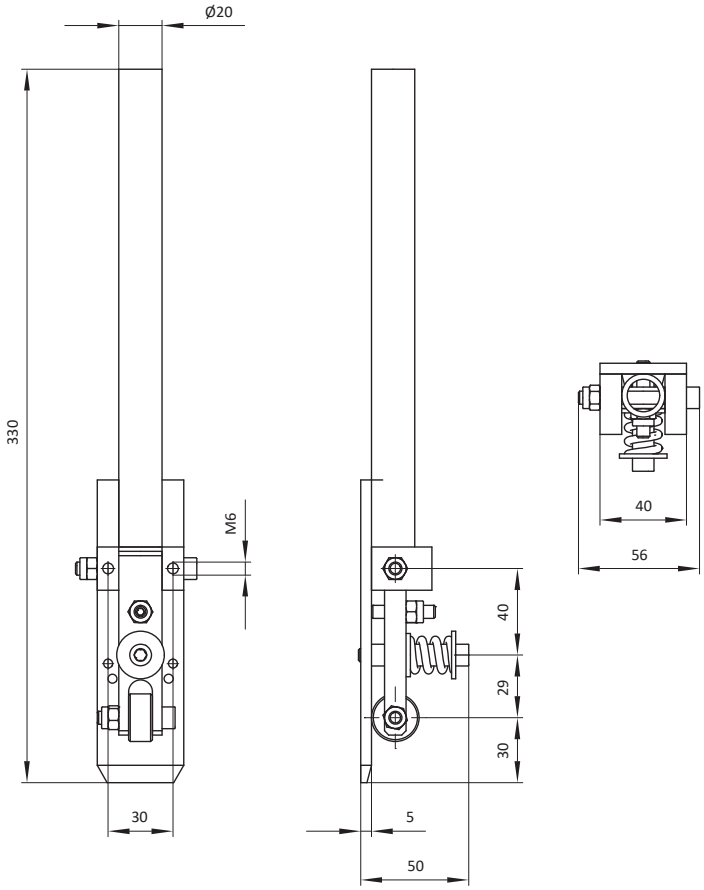

Part No.	Description	m [kg]
101712	MKS20-KGSP32-300	0,87

Magnet Gripper

Description	Part No.
MKS-MG01-XX	see table

Type: single stage, magnet fixed, with ball, initial position scraper extracted, port (P) G1/4

Material: body: aluminium; ball: steel; seals: NBR

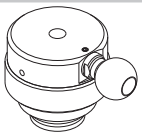

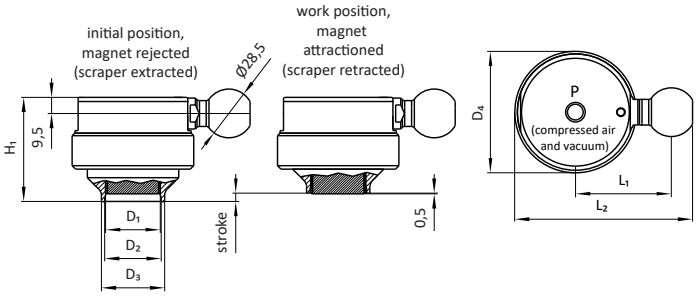

Part No.	Description	Stroke [mm]	D_1 [mm]	D_2 [mm]	D_3 [mm]	D_4 [mm]	H_1 [mm]	L_1 [mm]	L_2 [mm]	LH[1] [mm]	m [kg]
17873	MKS-MG01-25	8,5	20	21	25	55	52	48	88	0,5	0,35
15991	MKS-MG01-30	9,5	25	36	30	55	58	48	88	0,5	0,40
17880	MKS-MG01-37	11,5	32	33	37	71	68	56	104	0,5	0,70

[1] overhang magnet in work position

Description	Part No.
MKS-MG01-W-XX	see table

Type: single stage, magnet fixed, with rod journal, initial position scraper extracted, port (P) G1/4

Material: body: aluminium; rod journal: steel; seals: NBR

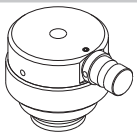

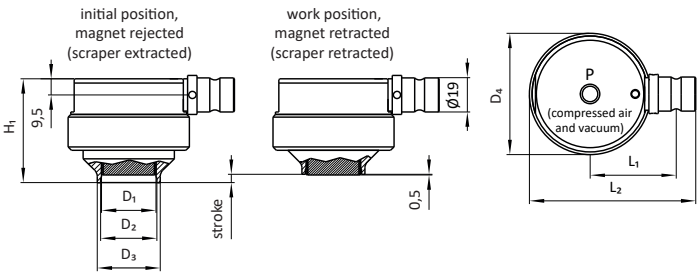

Part No.	Description	Stroke [mm]	D_1 [mm]	D_2 [mm]	D_3 [mm]	D_4 [mm]	H_1 [mm]	L_1 [mm]	L_2 [mm]	LH[1] [mm]	m [kg]
17022	MKS-MG01-W-25	8,5	20	21	25	55	52	42,5	81,5	0,5	0,35
17023	MKS-MG01-W-30	9,5	25	36	30	55	58	42,5	81,5	0,5	0,40
17024	MKS-MG01-W-37	11,5	32	33	37	71	68	50,5	97,5	0,5	0,70

[1] overhang magnet in work position

Description	Part No.
MKS-MGXX-XX-X	see table

Type: single stage, scraper fixed, with ball, initial position magnet retracted, ports (P) G1/8

Material: body: aluminium; ball: steel; seals: NBR

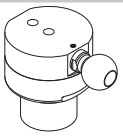

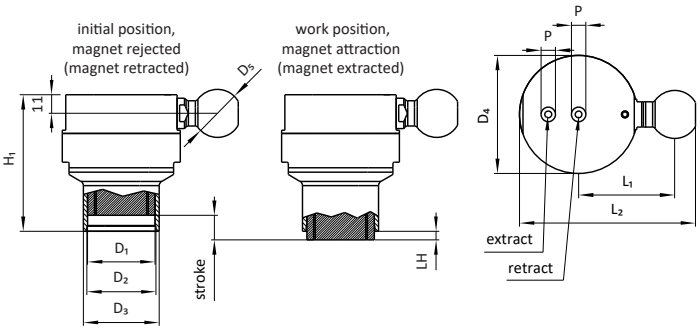

Part No.	Description	Stroke [mm]	D_1 [mm]	D_2 [mm]	D_3 [mm]	D_4 [mm]	D_5 [mm]	H_1 [mm]	L_1 [mm]	L_2 [mm]	LH[1] [mm]	m [kg]
17736	MKS-MG03-30	10	25	26	30	55	28,5	63,5	49,5	89,5	0,5	0,41
17737	MKS-MG03-35	10	30	31	35	60	28,5	70,5	52	94,5	0,5	0,52
17738	MKS-MG03-45	12	40	41	45	70	28,5	81,5	57	104,5	0,5	0,80
17741	MKS-MG03-35-1	10	30	31	34	60	32	70,5	56	100,5	0,5	0,52
17887	MKS-MG03-45-1	12	40	41	45	70	32	81,5	61	110,5	0,5	0,80
17733	MKS-MG04-30	15	25	26	30	55	28,5	64	49,5	89,5	5	0,41
17734	MKS-MG04-35	15	30	31	35	60	28,5	71	52	94,5	5	0,53
17735	MKS-MG04-45	17	40	41	45	70	28,5	83	57	104,5	5	0,83

[1] overhang magnet in work position

Description	Part No.
MKS-MG03-WXX-XX	see table

Type: single stage, scraper fixed, with rod journal, initial position magnet retracted, ports (P) G1/8

Material: body: aluminium; rod journal: steel; seals: NBR

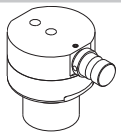

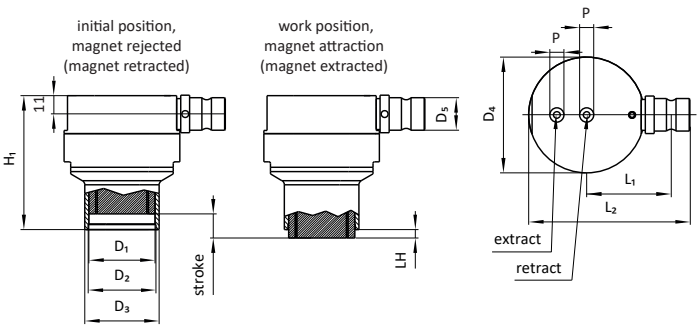

Part No.	Description	Stroke [mm]	D_1 [mm]	D_2 [mm]	D_3 [mm]	D_4 [mm]	D_5 [mm]	H_1 [mm]	L_1 [mm]	L_2 [mm]	LH[1] [mm]	m [kg]
104697	MKS-MG03-W19-30	10	25	26	30	55	19	63	46,5	87	0,5	0,41
104698	MKS-MG03-W19-35	10	30	31	35	60	19	70	49	92	0,5	0,52
104699	MKS-MG03-W19-45	12	40	41	45	70	19	81	54	102	0,5	0,80
17808	MKS-MG03-W-30	10	25	26	30	55	20	63	44	83	0,5	0,41
17809	MKS-MG03-W-35	10	30	31	35	60	20	70	46,5	88	0,5	0,52
17810	MKS-MG03-W-45	12	40	41	45	70	20	81	51,5	98	0,5	0,80
100274	MKS-MG04-W-35	15	30	31	35	60	20	71	46,5	88	5	0,53

[1] overhang magnet in work position

Magnet Gripper

Description	Part No.
MKS-MG05-35-XX	see table

Type: double-stage, with flange, initial position magnet retracted, scraper extracted, ports (P) G1/8

Material: body: aluminium
seals: NBR

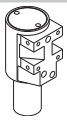

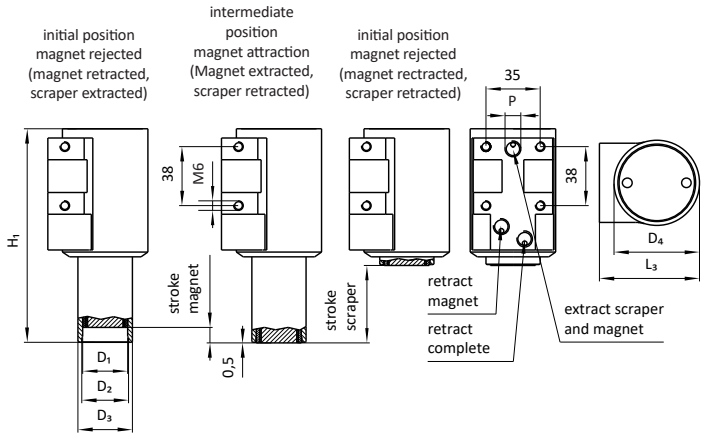

Part No.	Description	Stroke magnet [mm]	Stroke scraper [mm]	D_1 [mm]	D_2 [mm]	D_3 [mm]	D_4 [mm]	H_1 [mm]	L_3 [mm]	LH^1 [mm]	m [kg]
17862	MKS-MG05-35-10	10	10	29	30	35	55	77,5	72	0,5	0,61
17860	MKS-MG05-35-30	10	30	29	30	35	55	97,5	72	0,5	0,65
17847	MKS-MG05-35-50	10	50	29	30	35	55	137,5	72	0,5	0,67

[1] overhang magnet in work position

Description	Part No.
MKS-MG02-XX-XX	see table

Type: double-stage, with flange, initial position magnet retracted, scraper retracted, ports (P) G1/8

Material: body: aluminium
seals: NBR

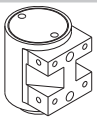

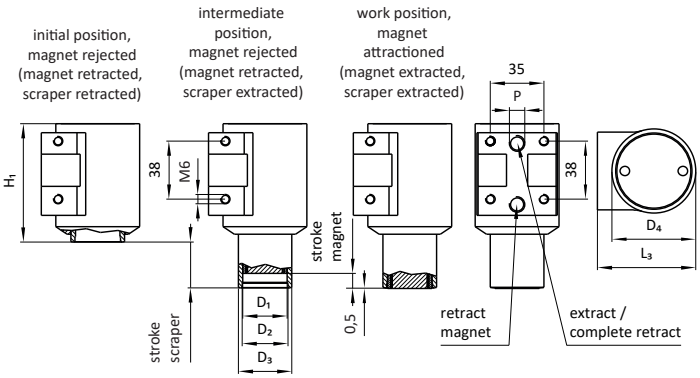

Part No.	Description	Stroke magnet [mm]	Stroke scraper [mm]	D_1 [mm]	D_2 [mm]	D_3 [mm]	D_4 [mm]	H_1 [mm]	L_3 [mm]	LH^1 [mm]	m [kg]
17739	MKS-MG02-35-10	10	10	29	30	35	55	77,5	64,5	0,5	0,63
17740	MKS-MG02-35-30	10	30	29	30	35	55	77,5	64,5	0,5	0,66
102530	MKS-MG02-45-10	12	10	39	40	45	70	102	82	0,5	0,73
102526	MKS-MG02-45-30	12	30	39	40	45	70	102	82	0,5	0,73

[1] overhang magnet in work position

Gripper Mounting (Magnet Gripper)

Description	Part No.
MKS-AKU62-X	see table

Type: ball with flange, with / without guiding, mounting double-sided

Material: steel

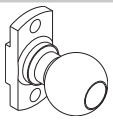

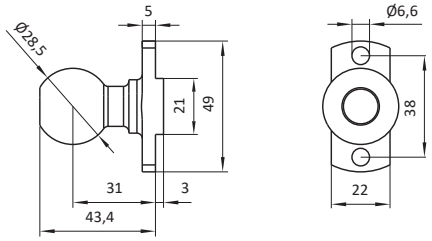

Part No.	Description	m [kg]
17093	MKS-AKU62-2	0,14

Description	Part No.
MKS-AKUXX-X	see table

Type: ball with flange, for magnet gripper

Material: steel

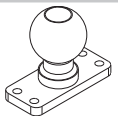

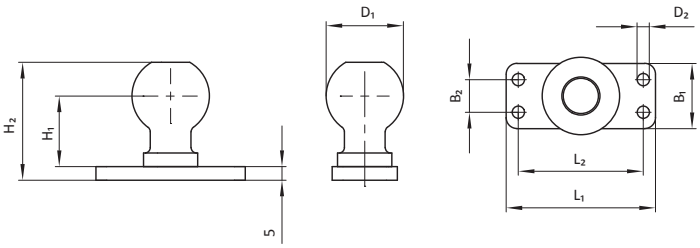

Part No.	Description	D_1 [mm]	D_2 [mm]	H_1 [mm]	H_2 [mm]	B_1 [mm]	B_2 [mm]	L_1 [mm]	L_2 [mm]	m [kg]
107101	MKS-AKU32-1	32	-	31,5	50,5	40	-	40	-	0,20
103061	MKS-AKU62-5	28,5	4,5	26	43,4	24	12	55	46	0,14
103062	MKS-AKU62-6	28,5	5,5	26	43,4	25	15	70	58	0,16

Description	Part No.
MKS-AKU62-2	17093

Type: ball with flange, for magnet gripper

Material: steel

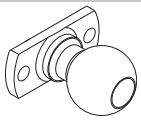

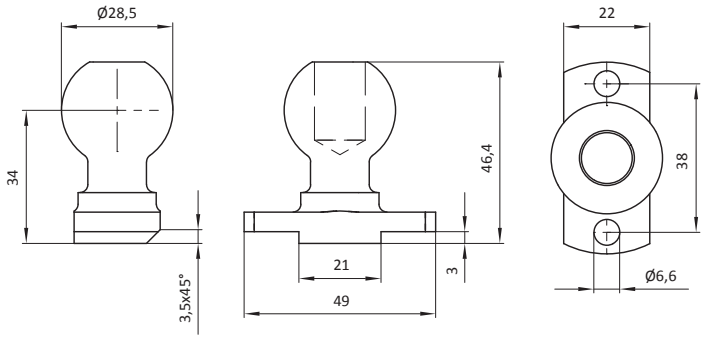

Part No.	Description	m [kg]
17093	MKS-AKU62-2	0,14

Description	Part No.
MKS-AW3X-W19	see table

Type: recessed rod journal (apple core) with flange, for MG07-30 [-40]

Material: steel

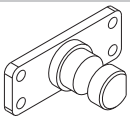

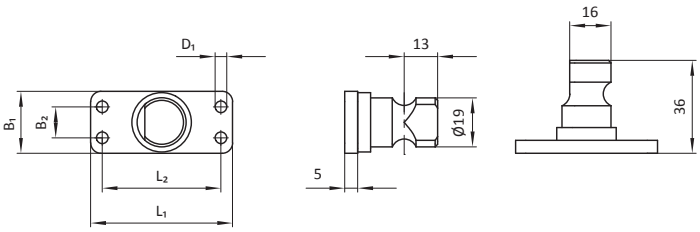

Part No.	Description	D_1 [mm]	B_1 [mm]	B_2 [mm]	L_1 [mm]	L_2 [mm]	m [kg]
101863	MKS-AW36-W19	4,5	24	12	55	46	0,11
101864	MKS-AW37-W19	5,5	26	15	69	58	0,11

Technical changes and errors are subject to change without notice!

9. Elements for additional Motions

Index

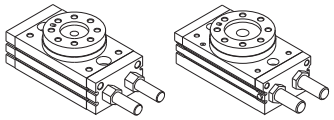
Swivel Drive 261

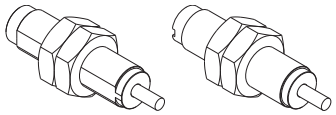
Shock Absorber for Swivel Drive 263

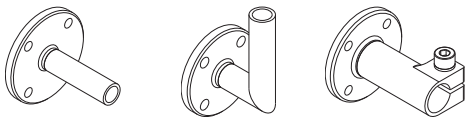
Adapter for Swivel Drive..... 264

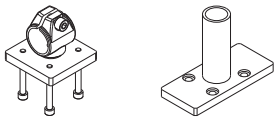
Adapter for Guiding Unit 269

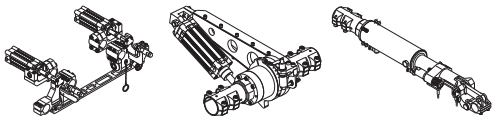
Swivel Device 271

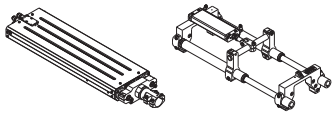
Slide Unit 273

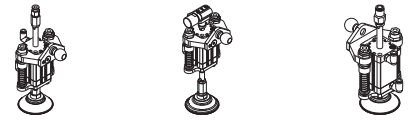
Suction Cup Mounting with additional Stroke..... 274

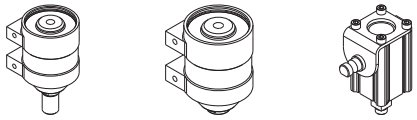
Suction Cup Mounting with Stroke 275

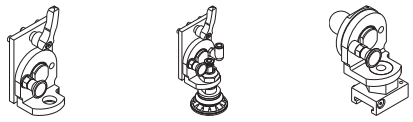
Suction Cup Mounting swivelling..... 276

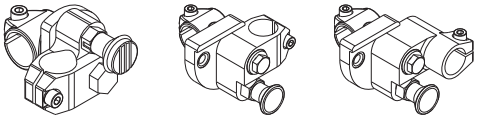
Hinge Connector..... 278

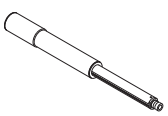
Taboo Area Cylinder 279

9. Elements for additional Motions

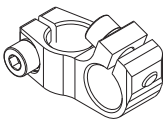
cessories for Taboo Area Cylinder 280

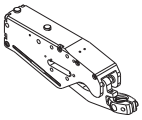
ed Gripper 281


cessories for Feed Gripper 282

Swivel Drive

Description	Part No.
MKS-SW02-X	see table

Type: max. swivel motion 190°, with adjustable swivel angle

Material: material mix

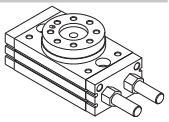

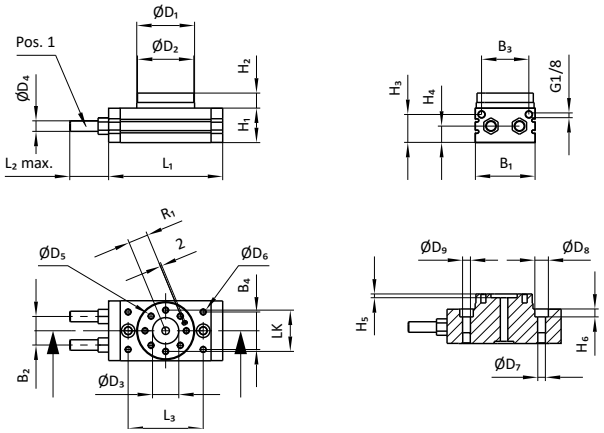

Part No.	Description	D_1 [mm]	D_2 [mm]	D_3 [mm]	D_4 [mm]	D_5 [mm]	D_6 [mm]	D_7 [mm]	D_8 [mm]	D_9 [mm]	R_1 [mm]	B_1 [mm]	B_2 [mm]	B_3 [mm]	B_4 [mm]	H_1 [mm]	H_2 [mm]	H_3 [mm]	H_4 [mm]	H_5 [mm]	H_6 [mm]	LK [mm]
15454	MKS-SW02-1	67	65	32	M10x1 (2x)	M6 (8x; 10 deep)	M6 (4x; 8 deep)	M10 (15 deep)	14	8,6	23	70	29	50	37	40	17	32	18,5	4,5	8,5	48
14619	MKS-SW02	77	75	35	M14x1,5 (2x)	M8 (8x; 12 deep)	M8 (4x; 8 deep)	M12 (18 deep)	18	10,5	26,5	80	38	63	50	46	20	37,5	22	5	10,5	55
105602	MKS-SW02-5	77	75	35	M14x1,5 (2x)	M8 (8x; 12 deep)	M8 (4x; 8 deep)	M12 (18 deep)	18	10,5	26,5	80	38	63	50	46	20	37,5	22	5	10,5	55

Part No.	Description	L_1 [mm]	L_2 max. [mm]	L_3 [mm]	m [kg]	Adjustable stop/shock absorber [Pos.1]
15454	MKS-SW02-1	127	25	84	1,29	2x adjustable stop
14619	MKS-SW02	152	31,4	100	2,06	2x adjustable stop
105602	MKS-SW02-5	152	31,4	100	2,06	2x MKS-STD01-50 (shock absorber)

Swivel Drive

Description	Part No.
MKS-SW02-X	see table

Type: max. swivel motion 190°, with adjustable swivel angle

Material: material mix

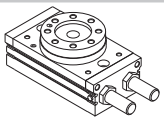

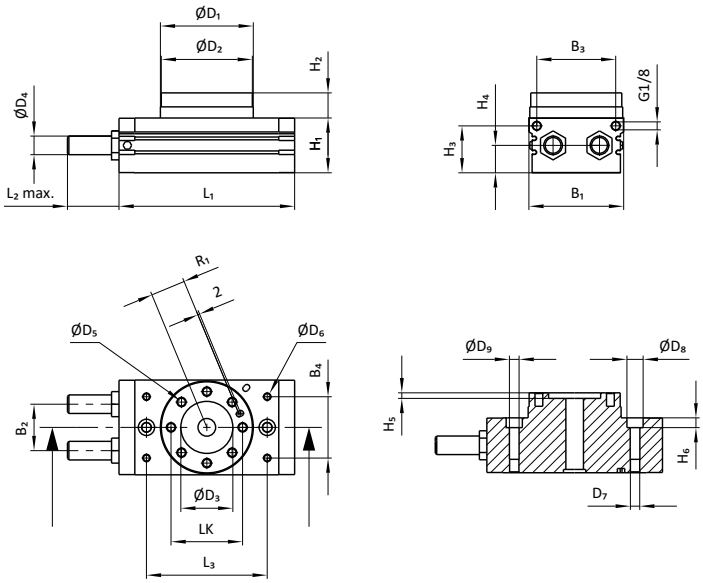

Part No.	Description	D_1 [mm]	D_2 [mm]	D_3 [mm]	D_4 [mm]	D_5 [mm]	D_6 [mm]	D_7 [mm]	D_8 [mm]	D_9 [mm]	R_1 [mm]	B_1 [mm]	B_2 [mm]	B_3 [mm]	B_4 [mm]	H_1 [mm]	H_2 [mm]	H_3 [mm]	H_4 [mm]	H_5 [mm]	H_6 [mm]
15455	MKS-SW02-2	90	88	46	M20x1,5 (2x)	M8 (8x; 12,5 deep)	M8 (8x; 10 deep)	M12 (18 deep)	17,5	10,4	32,5	90	42	75	57	53	22	44,5	25,5	5	10,5
17585	MKS-SW02-3	100	98	56	M20x1,5 (2x)	M10 (8x; 14,5 deep)	M8 (8x; 10 deep)	M12 (18 deep)	17,5	10,4	37,5	101	50	85	66	59	27	50,5	29,5	6	10,5

Part No.	Description	LK [mm]	L_1 [mm]	L_2 max. [mm]	L_3 [mm]	m [kg]
15455	MKS-SW02-2	67	170	34,2	110	2,88
17585	MKS-SW02-3	77	189	34,3	130	4,09

Shock Absorber for Swivel Drive

Description	Part No.
MKS-STD01-XX	see table

Type: with spanner flat

Material: material mix

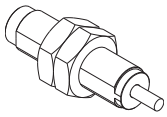

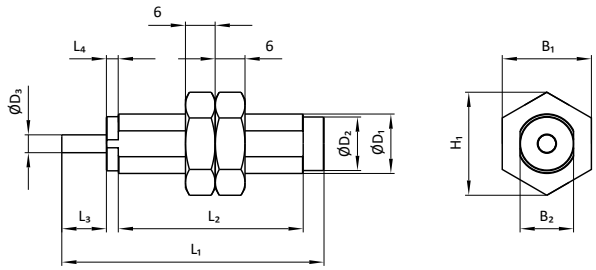

Part No.	Description	B_1 [mm]	B_2 [mm]	D_1 [mm]	D_2 [mm]	D_3 [mm]	H_1 [mm]	L_1 [mm]	L_2 [mm]	L_3 [mm]	L_4 [mm]	m [kg]	for swivel drive
15457	MKS-STD01-50	SW19	SW12	M14x1,5	12	5	21,9	78,3	58,8	11	3,5	0,07	MKS-SW02
15458	MKS-STD01-70	SW27	SW18	M20x1,5	18	6	31,2	88,2	62,2	15	4	0,15	MKS-SW02-2 & MKS-SW02-3

Description	Part No.
MKS-STD01-30	15456

Type: with groove for screwdriver

Material: material mix

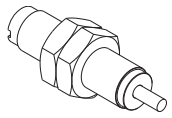

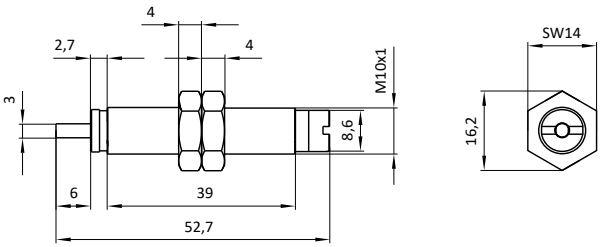

Part No.	Description	m [kg]	for swivel drive
15456	MKS-STD01-30	0,03	MKS-SW02-1

Adapter for Swivel Drive

Description	Part No.
MKSXX-ASWXX-XXXX	see table

Type: with flange, with tube

Material: steel

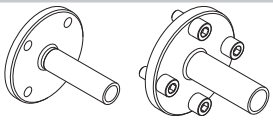

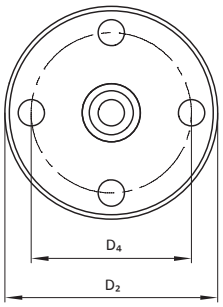

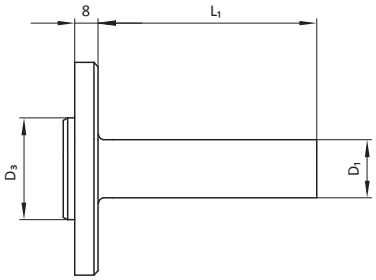

Part No.	Description	D_1 [mm]	D_2 [mm]	D_3 [mm]	D_4 / LK [mm]	L_1 [mm]	m [kg]	for swivel drive
11557	MKS20-ASW01-075	20	73	35	55	75	0,32	MKS-SW02
11558	MKS20-ASW01-100	20	73	35	55	100	0,35	MKS-SW02
15057	MKS20-ASW01-150	20	73	35	55	150	0,41	MKS-SW02
14027	MKS20-ASW01-200	20	73	35	55	200	0,46	MKS-SW02
11565	MKS20-ASW11-075	20	86	46	67	75	0,41	MKS-SW02-2
11566	MKS20-ASW11-100	20	86	46	67	100	0,45	MKS-SW02-2
16784	MKS20-ASW11-200	20	86	46	67	200	0,54	MKS-SW02-2
104452	MKS20-ASW49-D75	20	58	28	43	75	0,19	SMC EMSQB20
104453	MKS20-ASW49-D100	20	58	28	43	100	0,23	SMC EMSQB20
11553	MKS25-ASW01-075	25	73	35	55	75	0,35	MKS-SW02
11554	MKS25-ASW01-100	25	73	35	55	100	0,39	MKS-SW02
14811	MKS25-ASW01-150	25	73	35	55	150	0,45	MKS-SW02
14812	MKS25-ASW01-200	25	73	35	55	200	0,53	MKS-SW02
106464	MKS25-ASW01-250	25	73	35	55	250	0,59	MKS-SW02
104264	MKS25-ASW07-75	25	63	32	48	75	0,25	MKS-SW02-1
104265	MKS25-ASW07-100	25	63	32	48	100	0,29	MKS-SW02-1
11561	MKS25-ASW11-075	25	86	46	67	75	0,43	MKS-SW02-2
11562	MKS25-ASW11-100	25	86	46	67	100	0,47	MKS-SW02-2
17626	MKS25-ASW11-150	25	86	46	67	150	0,54	MKS-SW02-2
12573	MKS30-ASW01-075	30	73	35	55	75	0,40	MKS-SW02
12574	MKS30-ASW01-100	30	73	35	55	100	0,42	MKS-SW02
105077	MKS30-ASW01-150	30	73	35	55	150	0,50	MKS-SW02
17704	MKS30-ASW01-200	30	73	35	55	200	0,59	MKS-SW02
17722	MKS30-ASW01-450	30	73	35	55	450	1,00	MKS-SW02
16248	MKS30-ASW11-075	30	86	46	67	75	0,47	MKS-SW02-2
16249	MKS30-ASW11-100	30	86	46	67	100	0,51	MKS-SW02-2
16250	MKS30-ASW11-150	30	86	46	67	150	0,58	MKS-SW02-2
16251	MKS30-ASW11-200	30	86	46	67	200	0,67	MKS-SW02-2
101229	MKS30-ASW43-75	30	96	56	77	75	0,56	MKS-SW02-3
101251	MKS30-ASW43-100	30	96	56	77	100	0,61	MKS-SW02-3
101252	MKS30-ASW43-150	30	96	56	77	150	0,69	MKS-SW02-3
101253	MKS30-ASW43-200	30	96	56	77	200	0,78	MKS-SW02-3
107816	MKS25-ASW43-D075	25	96	56	77	75	0,80	MKS-SW02-3
107817	MKS25-ASW43-D100	25	96	56	77	100	0,84	MKS-SW02-3
107818	MKS25-ASW43-D150	25	96	56	77	150	0,91	MKS-SW02-3

Adapter for Swivel Drive

Description	Part No.
MKS30-ASW48-D100	104080

Type: with flange, with tube (height-adjustable)

Material: steel

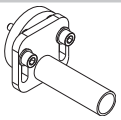

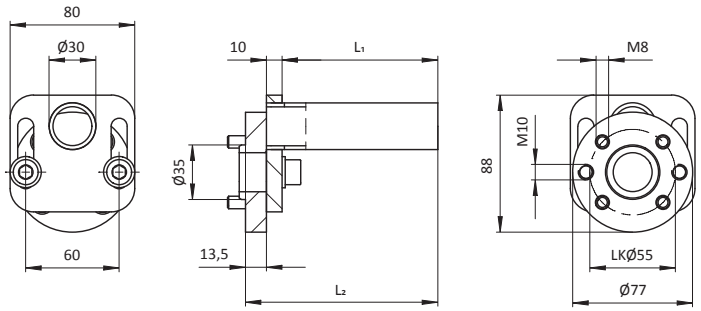

Part No.	Description	L_1 [mm]	L_2 [mm]	m [kg]	for swivel drive
104080	MKS30-ASW48-D100	100	123,5	0,95	for MKS-SW02

Description	Part No.
MKSXX-ASWX1-XXX	see table

Type: with flange, round, with tube 90°, angled

Material: steel

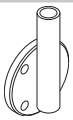

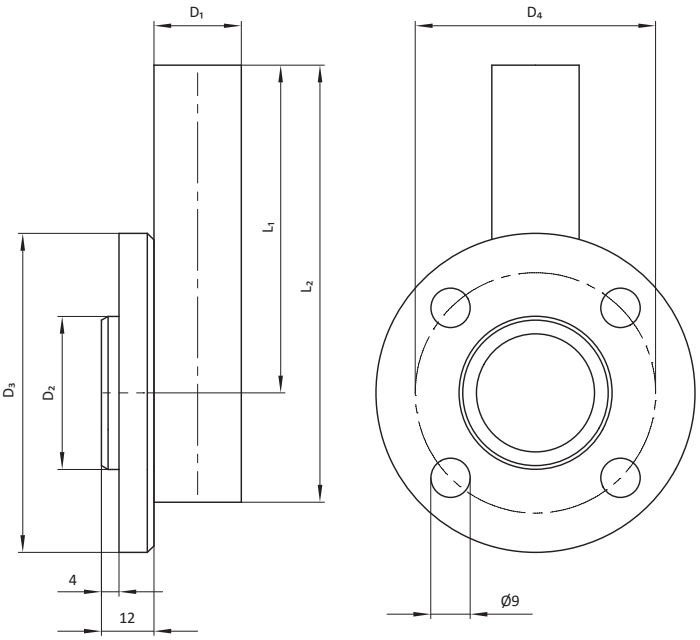

Part No.	Description	D_1 [mm]	D_2 [mm]	D_3 [mm]	D_4 [mm]	L_1 [mm]	L_2 [mm]	m [kg]	for swivel drive
102463	MKS20-ASW21-200	20	35	73	55	200	225	0,48	for MKS-SW02
106320	MKS20-ASW31-100	20	46	86	67	100	130	0,46	for MKS-SW02-2
106321	MKS20-ASW31-150	20	46	86	67	150	180	0,51	for MKS-SW02-2
106322	MKS20-ASW31-200	20	46	86	67	200	230	0,57	for MKS-SW02-2
16266	MKS25-ASW21-100	25	35	73	55	100	125	0,39	for MKS-SW02
16267	MKS25-ASW21-150	25	35	73	55	150	175	0,48	for MKS-SW02
16268	MKS25-ASW21-200	25	35	73	55	200	225	0,58	for MKS-SW02
16269	MKS25-ASW21-300	25	35	73	55	300	325	0,69	for MKS-SW02
17856	MKS25-ASW31-100	25	46	86	67	100	130	0,50	for MKS-SW02-2
17857	MKS25-ASW31-200	25	46	86	67	200	230	0,65	for MKS-SW02-2
17858	MKS25-ASW31-300	25	46	86	67	300	330	0,78	for MKS-SW02-2
104326	MKS30-ASW31-100	30	46	86	67	100	130	0,62	for MKS-SW02-2
104325	MKS30-ASW31-150	30	46	86	67	150	180	0,63	for MKS-SW02-2
17563	MKS30-ASW31-200	30	46	86	67	200	230	0,72	for MKS-SW02-2
102990	MKS30-ASW31-300	30	46	86	67	300	330	0,96	for MKS-SW02-2

Adapter for Swivel Drive

Description	Part No.
MKSXX-ASWX2-XXX	see table

Type: with flange, round, with tube 90° angled

Material: steel

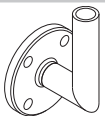

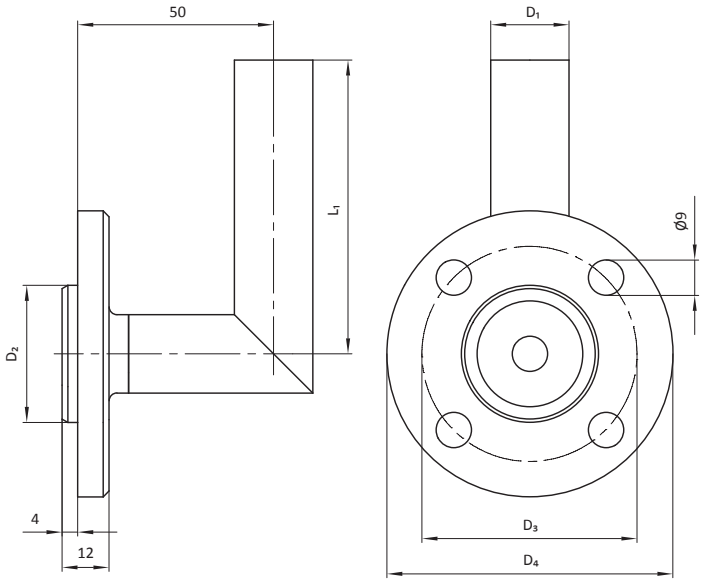

Part No.	Description	D_1 [mm]	D_2 [mm]	D_3 [mm]	D_4 [mm]	L_1 [mm]	m [kg]	for swivel drive
11559	MKS20-ASW02-075	20	35	55	73	75	0,37	MKS-SW02
11560	MKS20-ASW02-100	20	35	55	73	100	0,40	MKS-SW02
15058	MKS20-ASW02-150	20	35	55	73	150	0,45	MKS-SW02
15075	MKS20-ASW02-200	20	35	55	73	200	0,50	MKS-SW02
11567	MKS20-ASW12-075	20	46	67	86	75	0,45	MKS-SW02-2
11568	MKS20-ASW12-100	20	46	67	86	100	0,48	MKS-SW02-2
11555	MKS25-ASW02-075	25	35	55	73	75	0,41	MKS-SW02
11556	MKS25-ASW02-100	25	35	55	73	100	0,45	MKS-SW02
105078	MKS25-ASW02-150	25	35	55	73	150	0,51	MKS-SW02
105079	MKS25-ASW02-200	25	35	55	73	200	0,58	MKS-SW02
11563	MKS25-ASW12-075	25	46	67	86	75	0,49	MKS-SW02-2
11564	MKS25-ASW12-100	25	46	67	86	100	0,52	MKS-SW02-2
12575	MKS30-ASW02-075	30	35	55	73	75	0,45	MKS-SW02-2
12576	MKS30-ASW02-100	30	35	55	73	100	0,49	MKS-SW02
105080	MKS30-ASW02-150	30	35	55	73	150	0,57	MKS-SW02
103870	MKS30-ASW02-200	30	35	55	73	200	0,69	MKS-SW02
105082	MKS30-ASW12-075	30	46	67	86	75	0,53	MKS-SW02-2
105081	MKS30-ASW12-100	30	46	67	86	100	0,57	MKS-SW02-2

Description	Part No.
MKS20-ASW07-KAR	107398

Type: with flange, round, with clamp seat

Material: steel

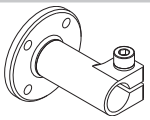

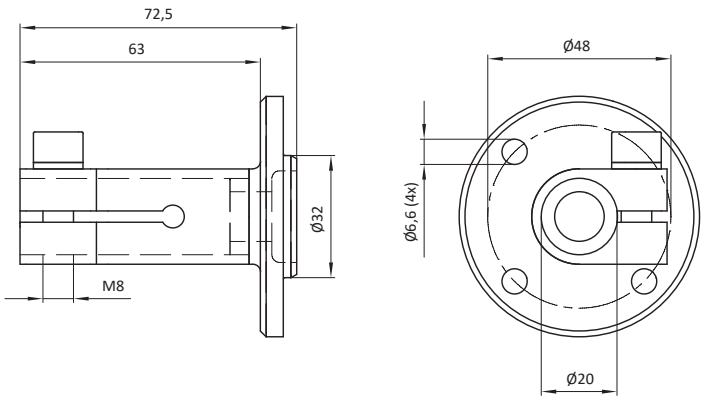

Part No.	Description	m [kg]	for swivel drive
107398	MKS20-ASW07-KAR	0,30	MKS-SW02-1

Adapter for Swivel Drive

Description	Part No.
MKSXX-ASWXX-XXX	see table

Type: with flange, round, with tube

Material: steel

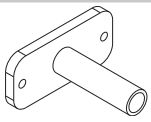

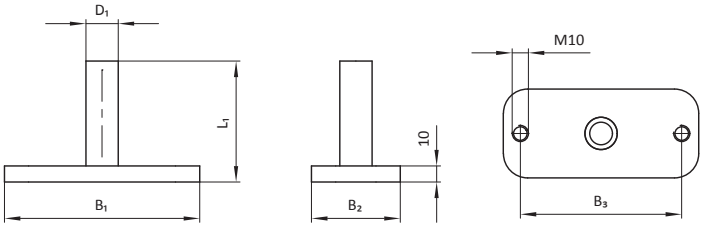

Part No.	Description	D_1 [mm]	B_1 [mm]	B_2 [mm]	B_3 [mm]	L_1 [mm]	m [kg]	for swivel drive
16165	MKS20-ASW04-100	20	121	55	100	100	0,60	MKS-SW02
16166	MKS20-ASW04-150	20	121	55	100	150	0,66	MKS-SW02
15958	MKS25-ASW04-100	25	121	55	100	100	0,61	MKS-SW02
15959	MKS25-ASW04-150	25	121	55	100	150	0,70	MKS-SW02
14603	MKS30-ASW04-100	30	121	55	100	100	0,64	MKS-SW02
14604	MKS30-ASW04-150	30	121	55	100	150	0,74	MKS-SW02
19084	MKS30-ASW04-200	30	121	55	100	200	0,84	MKS-SW02
105397	MKS30-ASW51-100	30	155	77	130	100	1,07	MKS-SW02-3
105398	MKS30-ASW51-150	30	155	77	130	150	1,15	MKS-SW02-3
105399	MKS30-ASW51-200	30	155	77	130	200	1,26	MKS-SW02-3

Description	Part No.
MKSXX-ASW14-XXX	see table

Type: with flange, with tube

Material: steel

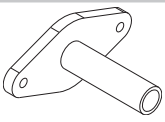

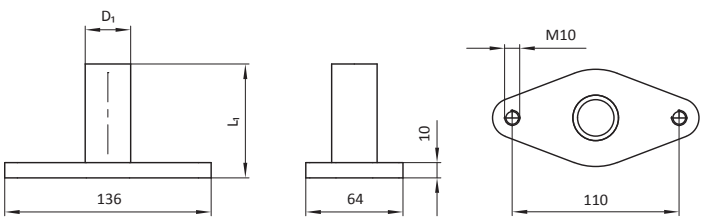

Part No.	Description	D_1 [mm]	L_1 [mm]	m [kg]	for swivel drive
16646	MKS25-ASW14-100	25	100	0,60	MKS-SW02-2
16647	MKS25-ASW14-150	25	150	0,70	MKS-SW02-2
102396	MKS30-ASW14-75	30	75	0,55	MKS-SW02-2
16252	MKS30-ASW14-100	30	100	0,60	MKS-SW02-2
16253	MKS30-ASW14-150	30	150	0,70	MKS-SW02-2
100055	MKS30-ASW14-200	30	200	0,80	MKS-SW02-2

Description	Part No.
MKS30-ASW14-R-XXX	see table

Type: with flange, with tube 90°, right staggered

Material: steel

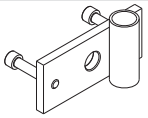

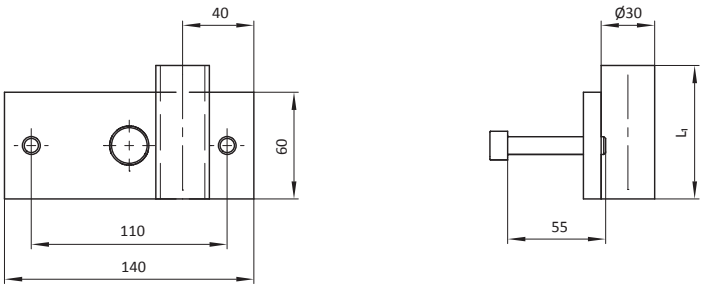

Part No.	Description	L_1 [mm]	m [kg]	for swivel drive
105086	MKS30-ASW14-R-100	100	0,89	MKS-SW02-2
105087	MKS30-ASW14-R-150	150	0,96	MKS-SW02-2
105088	MKS30-ASW14-R-200	200	1,06	MKS-SW02-2
15655	MKS30-ASW14-R-300	300	1,23	MKS-SW02-2

Description	Part No.
MKS30-ASW14-L-XXX	see table

Type: with flange, with tube 90°, left staggered

Material: steel

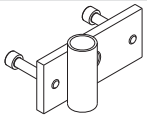

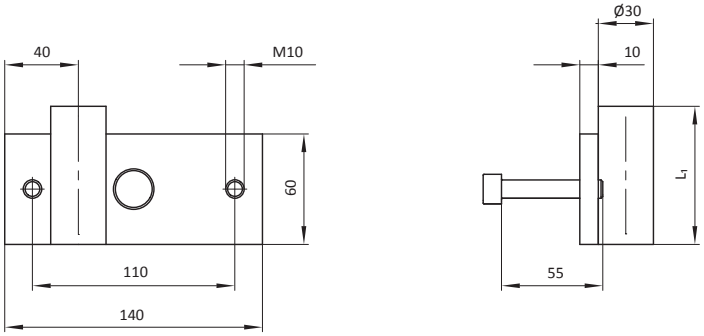

Part No.	Description	L_1 [mm]	m [kg]	for swivel drive
105083	MKS30-ASW14-L-100	100	0,89	MKS-SW02-2
105084	MKS30-ASW14-L-150	150	0,96	MKS-SW02-2
105085	MKS30-ASW14-L-200	200	1,06	MKS-SW02-2
15656	MKS30-ASW14-L-300	300	1,23	MKS-SW02-2

Adapter for Swivel Drive

Description	Part No.
MKSXX-ASWXX-R-XXX	see table

Type: with flange, with tube 90°, right staggered

Material: steel

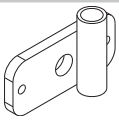

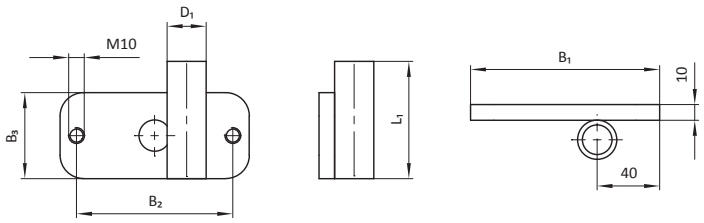

Part No.	Description	D_1 [mm]	B_1 [mm]	B_2 [mm]	B_3 [mm]	L_1 [mm]	m [kg]	for swivel drive
16643	MKS25-ASW04-R-300	25	121	100	55	300	0,97	MKS-SW02
16644	MKS25-ASW14-R-300	25	140	110	70	300	1,20	MKS-SW02-2
102024	MKS30-ASW04-R-100	30	121	100	55	100	0,67	MKS-SW02
102025	MKS30-ASW04-R-150	30	121	100	55	150	0,77	MKS-SW02
102026	MKS30-ASW04-R-200	30	121	100	55	200	0,87	MKS-SW02
106889	MKS30-ASW50-R-100	30	155	130	77	177	1,24	MKS-SW02-3
106890	MKS30-ASW50-R-150	30	155	130	77	227	1,34	MKS-SW02-3
106885	MKS30-ASW50-R-200	30	155	130	77	277	1,64	MKS-SW02-3

Description	Part No.
MKSXX-ASWXX-L-XXX	see table

Type: with flange, with tube 90°, left staggered

Material: steel

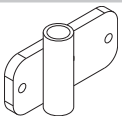

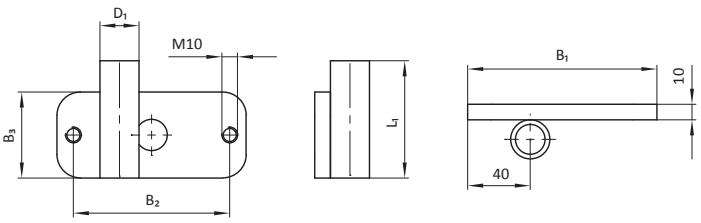

Part No.	Description	D_1 [mm]	B_1 [mm]	B_2 [mm]	B_3 [mm]	L_1 [mm]	m [kg]	for swivel drive
16642	MKS25-ASW04-L-300	25	121	100	55	300	0,97	MKS-SW02
16645	MKS25-ASW14-L-300	25	140	110	70	300	1,20	MKS-SW02-2
102021	MKS30-ASW04-L-100	30	121	100	55	100	0,70	MKS-SW02
102022	MKS30-ASW04-L-150	30	121	100	55	150	0,80	MKS-SW02
102023	MKS30-ASW04-L-200	30	121	100	55	200	0,90	MKS-SW02
105400	MKS30-ASW50-L-100	30	155	130	77	177	1,24	MKS-SW02-3
105401	MKS30-ASW50-L-150	30	155	130	77	227	1,34	MKS-SW02-3
105402	MKS30-ASW50-L-200	30	155	130	77	277	1,64	MKS-SW02-3

Description	Part No.
MKSXX-ASW06-1-KS	see table

Type: with flange, with clamp fixed

Material: steel

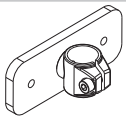

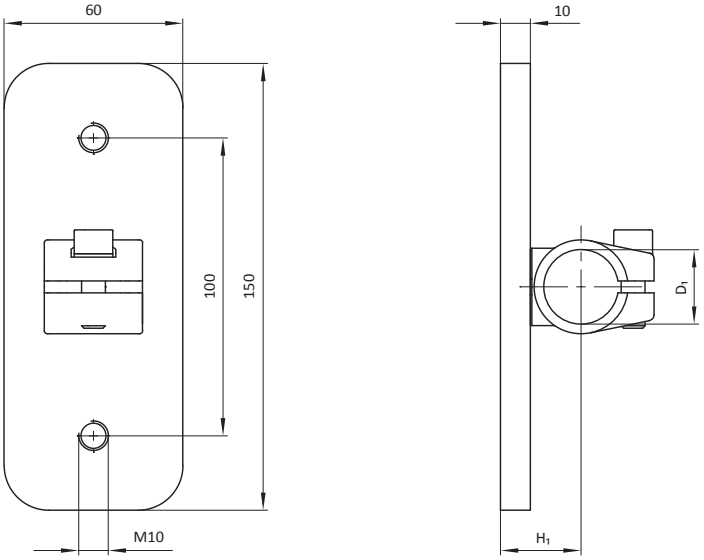

Part No.	Description	D_1 [mm]	H_1 [mm]	m [kg]	for swivel drive
103496	MKS25-ASW06-1-KS	25	27	0,80	MKS-SW02
103495	MKS20-ASW06-1-KS	20	27	0,80	MKS-SW02
103497	MKS30-ASW06-1-KS	30	30,5	0,80	MKS-SW02

Description	Part No.
MKS30-ASW14-1-100	17657

Type: with flange, with tube, left staggered

Material: steel

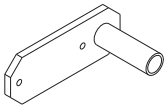

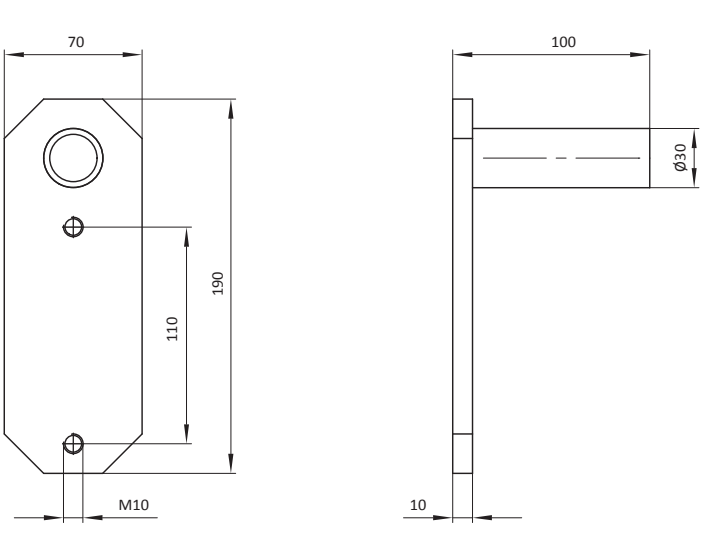

Part No.	Description	m [kg]	for swivel drive
17657	MKS30-ASW14-1-100	1,30	MKS-SW02-2

Adapter for Guiding Unit

Description	Part No.
MKS30-AFE18	18081

Type: for guiding unit Festo DFM-..., square, with clamp fixed

Material: steel

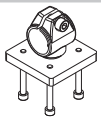

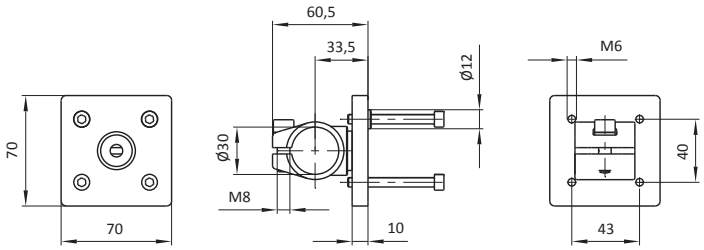

Part No.	Description	m [kg]
18081	MKS30-AFE18	0,41

Description	Part No.
MKSXX-AFE04-X	see table

Type: for guiding unit SMC MGPM..., rectangular, with clamp fixed

Material: steel

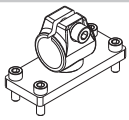

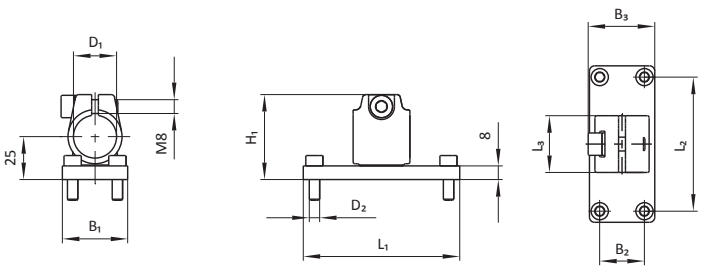

Part No.	Description	D_1 [mm]	D_2 [mm]	H_1 [mm]	B_1 [mm]	B_2 [mm]	B_3 [mm]	L_1 [mm]	L_2 [mm]	L_3 [mm]	m [kg]
100612	MKS20-AFE04-1	20	M6	47	38	26	36,7	91	78	28	0,33
103038	MKS20-AFE04-2	20	M8	47	45	30	42,2	110	96	28	0,37
17755	MKS25-AFE04-1	25	M6	49,5	38	26	37,7	91	78	33	0,36
17762	MKS25-AFE04-2	25	M8	49,5	45	30	42,2	110	96	33	0,48
17905	MKS25-AFE04-3	25	M8	49,5	45	30	42,2	118	104	33	0,48

Description	Part No.
MKSXX-AFE25-DXXX	see table

Type: for guiding unit Festo DFM-..., rectangular, with tube

Material: steel

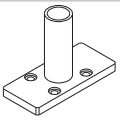

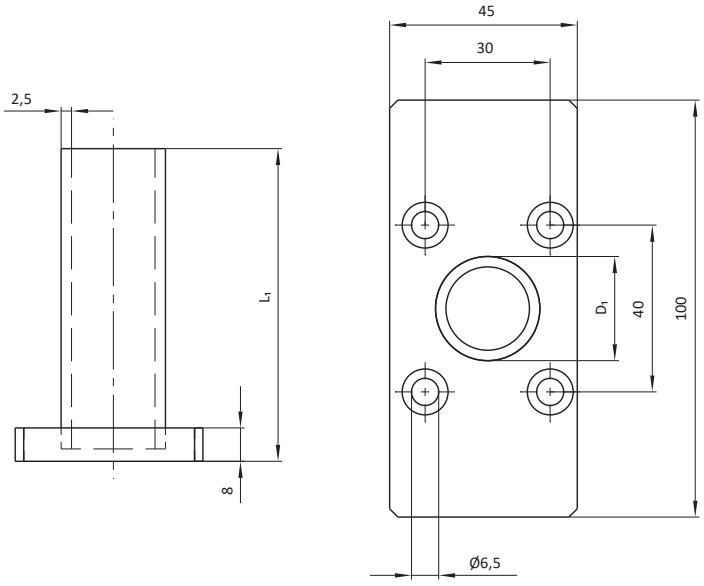

Part No.	Description	D_1 [mm]	L_1 [mm]	m [kg]
104764	MKS20-AFE25-D75	20	75	0,33
104765	MKS20-AFE25-D100	20	100	0,36
104766	MKS20-AFE25-D150	20	150	0,41
104309	MKS25-AFE25-D75	25	75	0,44
104310	MKS25-AFE25-D100	25	100	0,47
104311	MKS25-AFE25-D150	25	150	0,54
104312	MKS30-AFE25-D75	30	75	0,48
104313	MKS30-AFE25-D100	30	100	0,52
104314	MKS30-AFE25-D150	30	150	0,60
104339	MKS30-AFE25-D200	30	200	0,64

Adapter for Guiding Unit

Description	Part No.
MKSXX-AFEXX-XXX	see table

Type: for guiding unit Festo DFM-..., flange with tube 90°

Material: steel

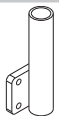

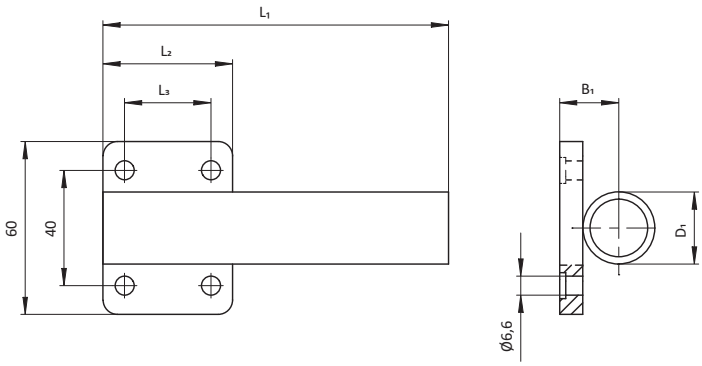

Part No.	Description	D_1 [mm]	B_1 [mm]	L_1 [mm]	L_2 [mm]	L_3 [mm]	m [kg]
100091	MKS25-AFE19-100	25	20,5	145	45	30	0,36
100092	MKS25-AFE19-150	25	20,5	195	45	30	0,43
100093	MKS25-AFE19-200	25	20,5	245	45	30	0,50
100094	MKS25-AFE19-250	25	20,5	295	45	30	0,57
100095	MKS25-AFE19-300	25	20,5	345	45	30	0,64
100096	MKS25-AFE19-350	25	20,5	395	45	30	0,71
100172	MKS30-AFE19-100	30	23	145	45	30	0,41
100173	MKS30-AFE19-150	30	23	195	45	30	0,49
100174	MKS30-AFE19-200	30	23	245	45	30	0,58
100175	MKS30-AFE19-250	30	23	295	45	30	0,66
100176	MKS30-AFE19-300	30	23	345	45	30	0,75
100177	MKS30-AFE19-350	30	23	395	45	30	0,83
102041	MKS25-AFE21-100	25	20,5	135	35	20	0,36
102042	MKS25-AFE21-150	25	20,5	185	35	20	0,43
102043	MKS25-AFE21-200	25	20,5	235	35	20	0,50
102044	MKS25-AFE21-250	25	20,5	285	35	20	0,57
102045	MKS25-AFE21-300	25	20,5	335	35	20	0,64
102046	MKS25-AFE21-350	25	20,5	385	35	20	0,71

Swivel Device

Description	Part No.
MKS40-SCE31-4	104127

Type: swivel angle 30° [-15° to +15°], wide type

Material: material mix

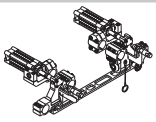

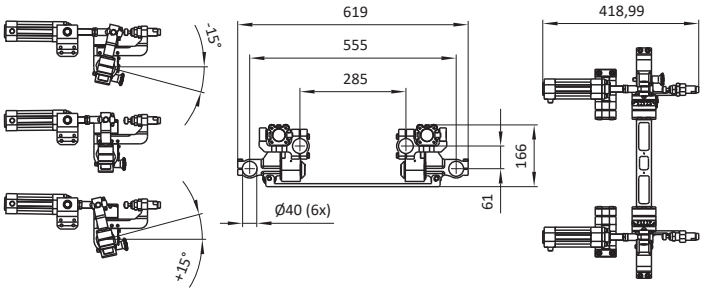

Part No.	Description	m [kg]
104127	MKS40-SCE31-4	10,3

Description	Part No.
MKS40-SCE31-1	101953

Type: swivel angle 25° [-12,5° to +12,5°]

Material: material mix

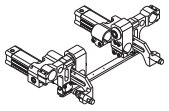

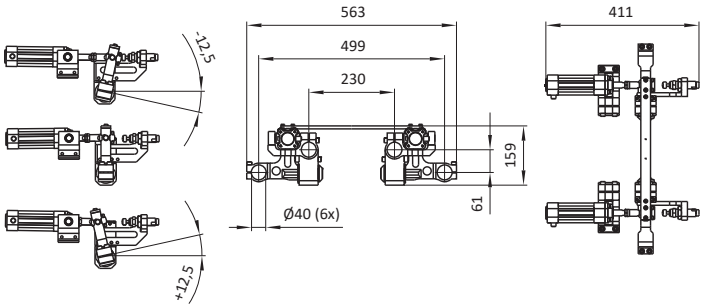

Part No.	Description	m [kg]
101953	MKS40-SCE31-1	9,02

Description	Part No.
MKS40-SCE31-3	102580

Type: swivel angle 70° [-30° to +40°]

Material: material mix

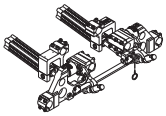

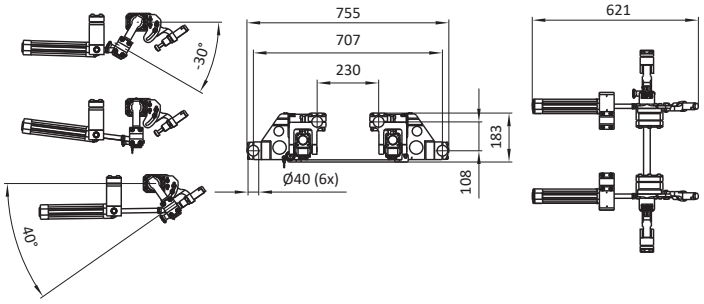

Part No.	Description	m [kg]
102580	MKS40-SCE31-3	15,26

Description	Part No.
MKS40-SCE31-2	102579

Type: swivel angle 40° [-20° to +20°]

Material: material mix

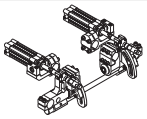

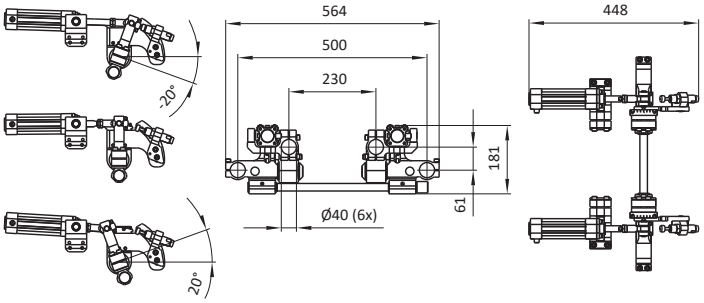

Part No.	Description	m [kg]
102579	MKS40-SCE31-2	9,96

Description	Part No.
MKS60-SCE01-S1	106215

Type: swivel angle 90°

Material: material mix

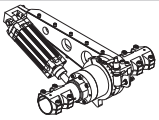

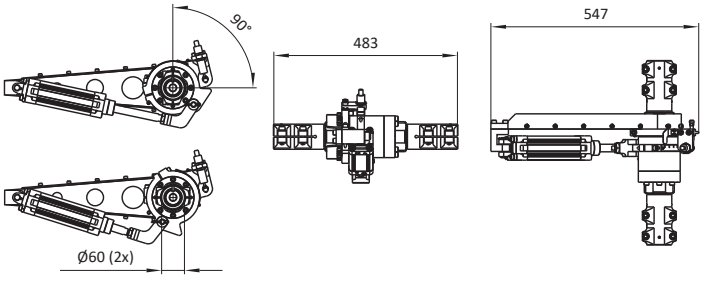

Part No.	Description	m [kg]
106215	MKS60-SCE01-S1	14,70

Swivel Device

Description	Part No.
MKS60/40-SCE03-50	16629

Type: swivel angle 90°, piston Ø 50mm

Material: material mix

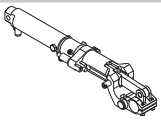

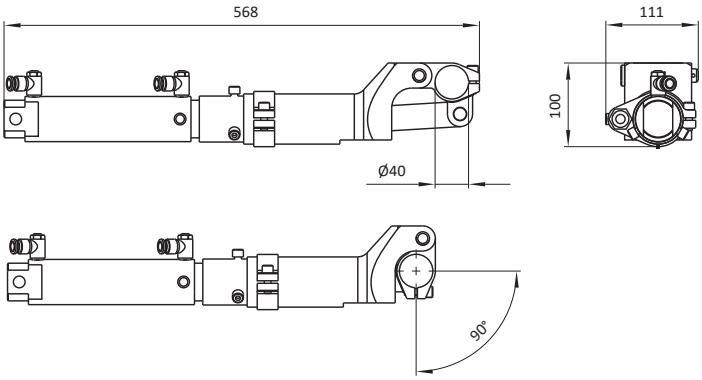

Part No.	Description	m [kg]
16629	MKS60/40-SCE03-50	4,60

Description	Part No.
MKS60/40-SCE03	14728

Type: swivel angle 90°, piston Ø 80mm

Material: material mix

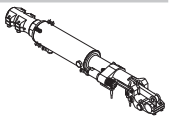

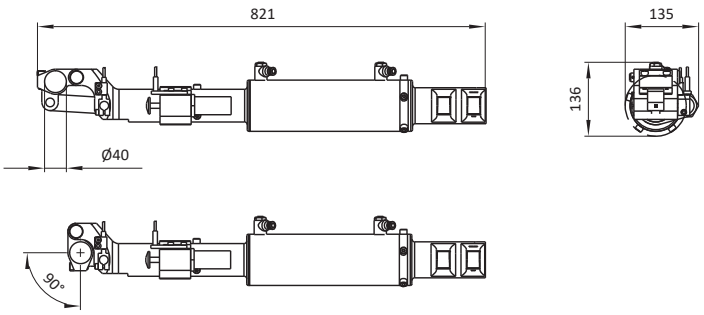

Part No.	Description	m [kg]
14728	MKS60/40-SCE03	12,80

Description	Part No.
MKS60-SCE27	101232

Type: swivel angle 90°

Material: material mix

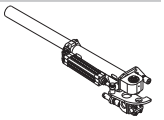

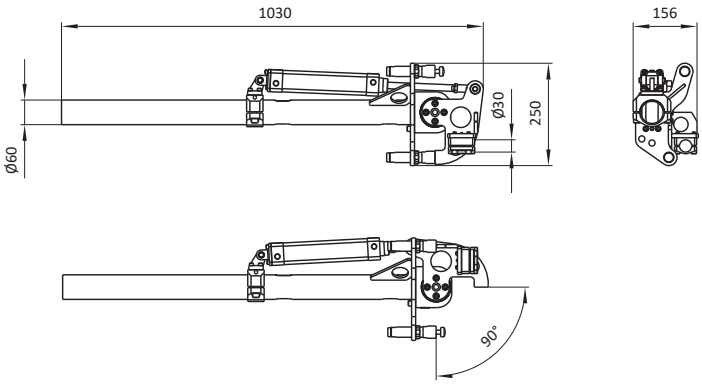

Part No.	Description	m [kg]
101232	MKS60-SCE27	12,04

Description	Part No.
MKS40/40-SCE32-XXXX	see table

Type: swivel angle 50° [-25° to +25°],
cylinder/swivel flange/fork head not included in the delivery

Material: material mix

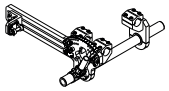

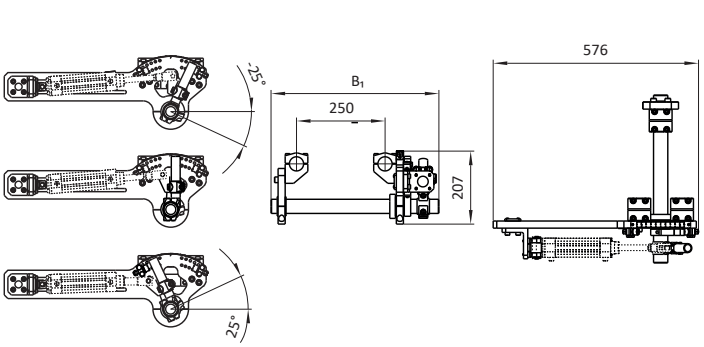

Part No.	Description	B_1 [mm]	m [kg]
106437	MKS40/40-SCE32-600	600	8,31
102119	MKS40/40-SCE32-1000	1000	10,31

Slide Unit

Description	Part No.
MKS60-VE12-500-01	101274

Type: with pneumatic cylinder Ø50mm

Material: material mix

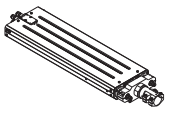

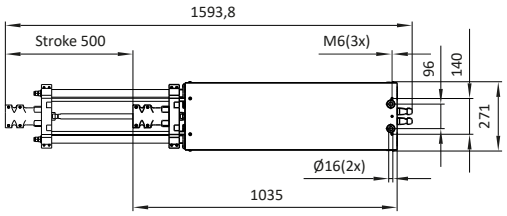

Part No.	Description	m [kg]
101274	MKS60-VE12-500-01	35,00

Description	Part No.
MKS-VEXX-XXX	see table

Type: for connecting elements Ø40mm

Material: material mix

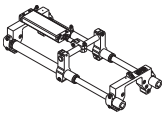

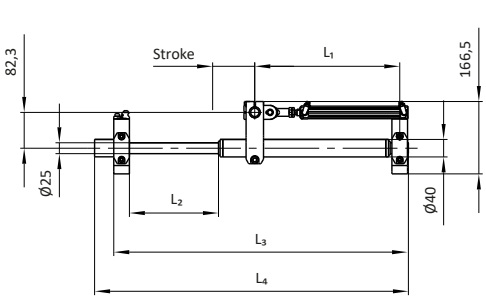

Part No.	Description	B_1 [mm]	B_2 [mm]	L_1 [mm]	L_2 [mm]	L_3 [mm]	L_4 [mm]	Stroke [mm]
104200	MKS-VE16-170	110	281	333,5	205	676	722	170
105319	MKS-VE16-200	110	281	363,5	205	676	722	200
104201	MKS-VE17-100	110	281	283,5	105	676	741	100
105541	MKS-VE18-300	130	290	466	331	1332	1339	300

Suction Cup Mounting with additional Stroke

Description	Part No.
MKS-SAMF03-50-K285-S2	106623

Type: with ball, with spring plunger, with elbow fittings Ø8mm, with straight fitting Ø8mm

Material: material mix



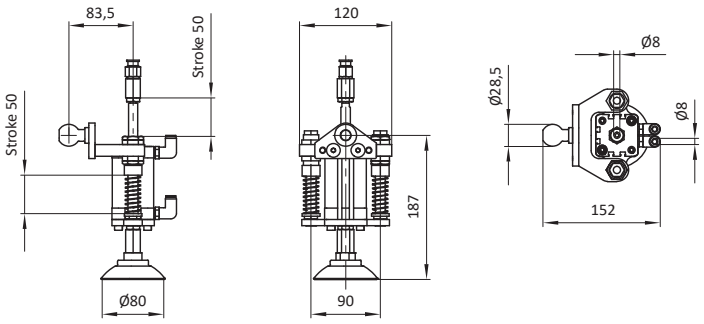

Part No.	Description	m [kg]
106623	MKS-SAMF03-50-K285-S2	1,50

Description	Part No.
MKS-SAMF03-50-K285-S1	105873

Type: with ball, with ejector, with spring plunger, with elbow fittings Ø8mm

Material: material mix



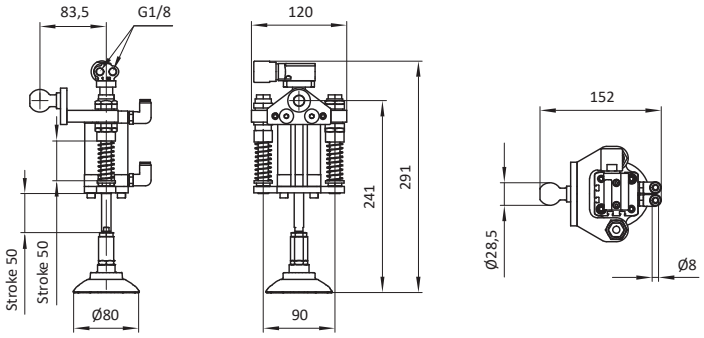

Part No.	Description	m [kg]
105873	MKS-SAMF03-50-K285-S1	1,80

Description	Part No.
MKS-SAMF03-X0-K285	see table

Type: with ball, with spring plunger, with elbow fittings Ø8mm, with straight fitting Ø8mm

Material: material mix



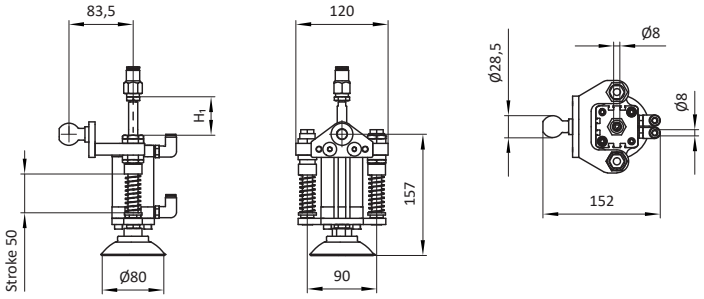

Part No.	Description	H_1/stroke [mm]	m [kg]
105935	MKS-SAMF03-50-K285	50	1,36
104703	MKS-SAMF03-80-K285	80	1,70

Suction Cup Mounting with Stroke

Description	Part No.
MKS-SAR27-1-XX	see table

Type: with external thread

Material: aluminium

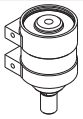

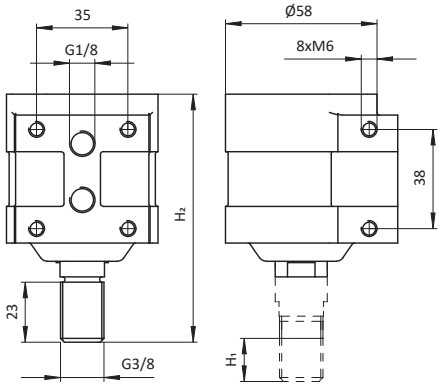

Part No.	Description	H_1/stroke [mm]	H_2 [mm]	m [kg]
17526	MKS-SAR27-1-15	15	95	0,4
17752	MKS-SAR27-1-30	30	110	0,41
17753	MKS-SAR27-1-50	50	130	0,47

Description	Part No.
MKS-SAR27-3-XX	see table

Type: with internal thread

Material: aluminium



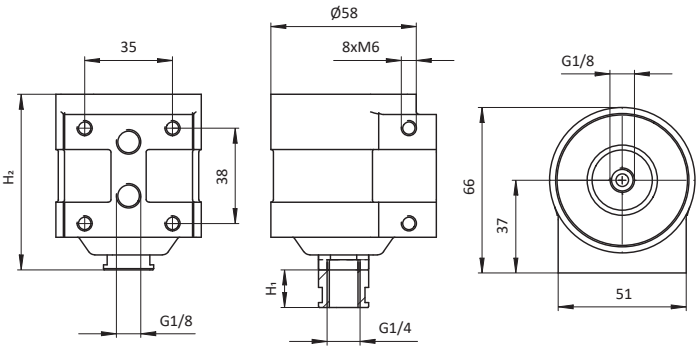

Part No.	Description	H_1/stroke [mm]	H_2 [mm]	m [kg]
17754	MKS-SAR27-3-15	15	70	0,39
17708	MKS-SAR27-3-30	30	85	0,42
17709	MKS-SAR27-3-50	50	105	0,47

Description	Part No.
MKS-SAR53-50-XX-W19	see table

Type: with rod journal

Material: material mix



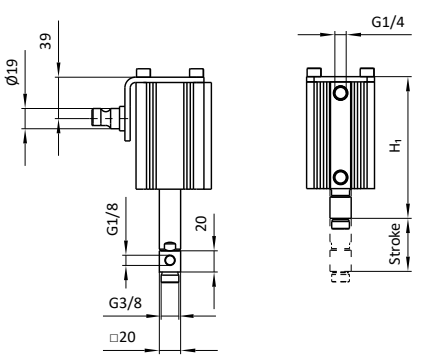

Part No.	Description	H_1 [mm]	Stroke [mm]
107489	MKS-SAR53-50-50-W19	133,5	50
107493	MKS-SAR53-50-75-W19	158,5	75

Suction Cup Mounting swivelling

Description	Part No.
MKS-SAR37-5	102503

Type: basic version, with safety catch

Material: material mix



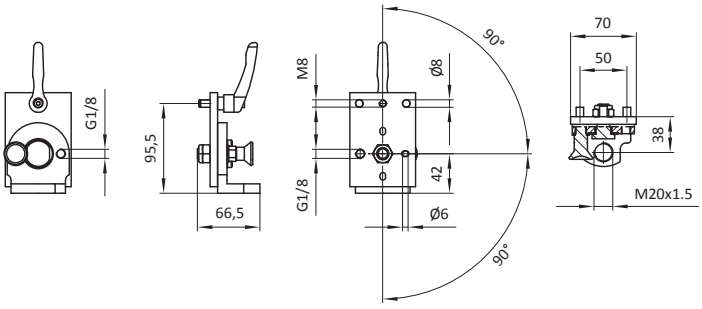

Part No.	Description	m [kg]
102503	MKS-SAR37-5	0,50

Description	Part No.
MKS-SAR37-X-X	see table

Type: without suction cup, with thread connection

Material: material mix

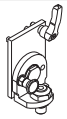

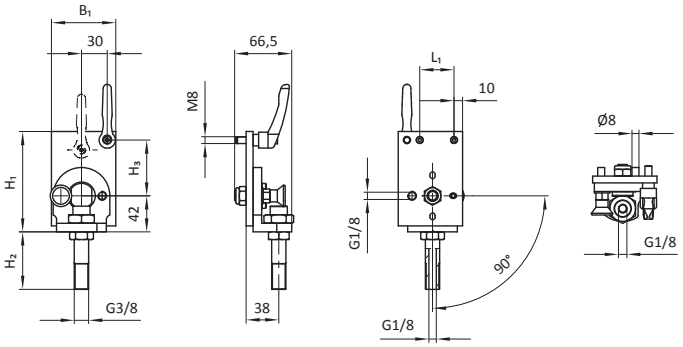

Part No.	Description	H_1 [mm]	H_2 [mm]	H_3 [mm]	B_1 [mm]	L_1 [mm]	m [kg]
19930	MKS-SAR37	100	20	53,5	70	50	0,52
101089	MKS-SAR37-4	117	20	65	75	40	0,52
100523	MKS-SAR37-4-V	117	67	65	75	40	0,58

Description	Part No.
MKS-SAR37-1-BS60	17996

Type: with suction cup, with safety catch

Material: material mix



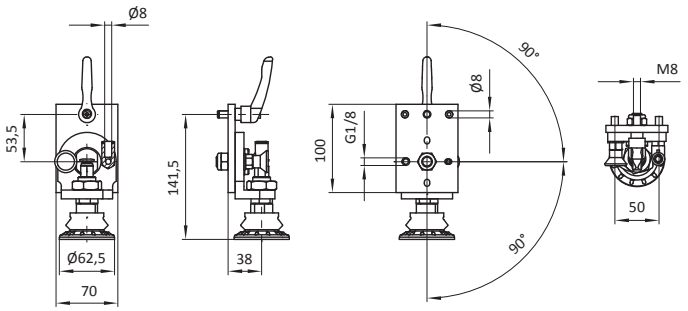

Part No.	Description	m [kg]	Ports
17996	MKS-SAR37-1-BS60	0,65	Ø 8 mm (2x)

Description	Part No.
MKS-SARXX-X	see table

Type: basic version (without suction cup, without thread connection)

Material: material mix

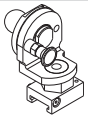

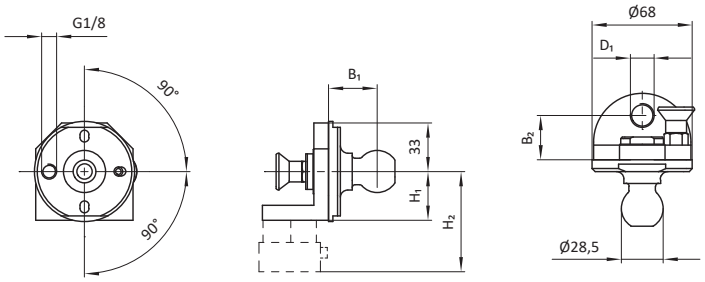

Part No.	Description	D_1 [mm]	H_1 [mm]	H_2 [mm]	B_1 [mm]	B_2 [mm]	Swivel angle	Square seat with 15mm extension
19966	MKS-SAR28-1	M16x1,5	33	-	33	30	90°	no
100732	MKS-SAR43-1	M30x1,6	42	-	34	34	90°, 180°, 270°	no
108066	MKS-SAR43-5	M30x1,7	42	77	34	34	90°	yes

Suction Cup Mounting swivelling

Description	Part No.
MKS-SARXX-X	see table

Type: basic version (without suction cup, without thread connection)

Material: material mix



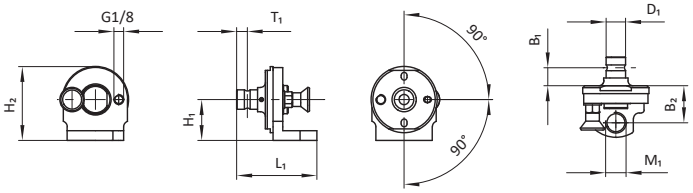

Part No.	Description	D_1 [mm]	M_1 [mm]	H_1 [mm]	H_2 [mm]	B_1 [mm]	B_2 [mm]	L_1 [mm]	T_1 [mm]	m [kg]
17049	MKS-SAR28	20	M16x1,5	33	67	18,5	38	82,5	11	0,34
17789	MKS-SAR34	20	M20x1,25	42	76	18,5	38	82,5	11	0,37
104406	MKS-SAR34-5	19	M20x1,25	42	78	21	43	95	13	0,36

Description	Part No.
MKS-SAR28-2	100178

Type: without suction cup, with thread connection

Material: material mix

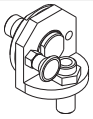

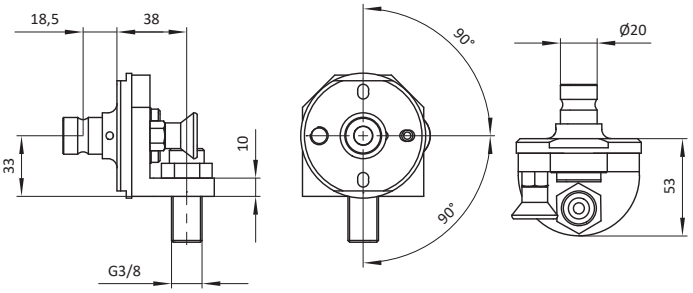

Part No.	Description	m [kg]
100178	MKS-SAR28-2	0,40

Hinge Connector

Description	Part No.
MKS30/30-SCE14-1-R	104351

Type: T-connector, swivelling to the right by 90°, end position on top

Material: steel

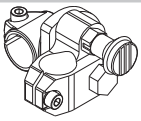

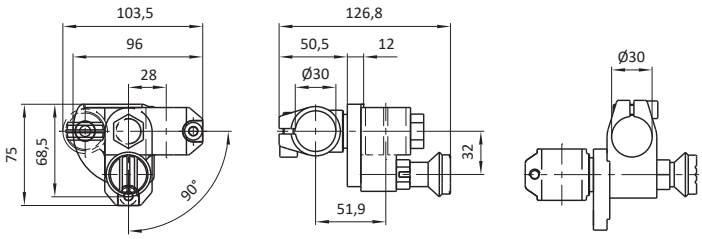

Part No.	Description	m [kg]
103451	MKS30/30-SCE14-1-R	1,08

Description	Part No.
MKS30/30-SCE14-1-L	103450

Type: T-connector, swivelling to the left by 90°, end position on top

Material: steel

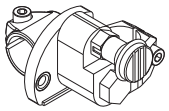

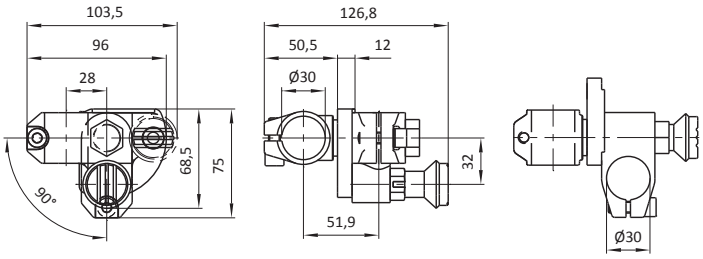

Part No.	Description	m [kg]
103450	MKS30/30-SCE14-1-L	1,07

Description	Part No.
MKS30/30-SCE14-2-R	104353

Type: cross connector, swivelling to the right by 90°

Material: steel

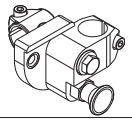

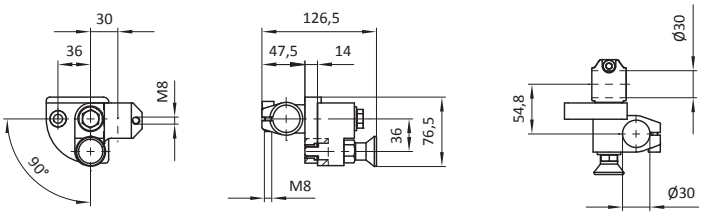

Part No.	Description	m [kg]
104353	MKS30/30-SCE14-2-R	1,51

Description	Part No.
MKS30/30-SCE14-2-L	104352

Type: cross connector, swivelling to the left by 90°

Material: steel

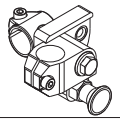

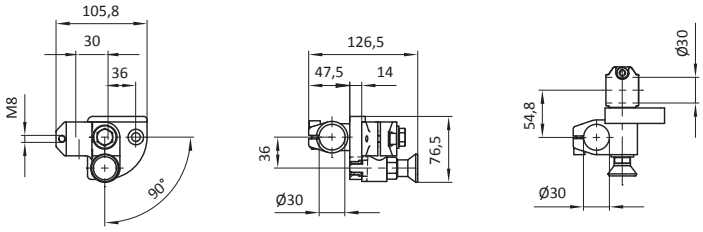

Part No.	Description	m [kg]
104352	MKS30/30-SCE14-2-L	1,51

Description	Part No.
MKS30/30-SCE14-3-R	104355

Type: T-connector, swivelling to the right by 90°, end position down

Material: steel

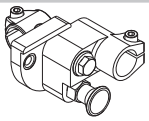

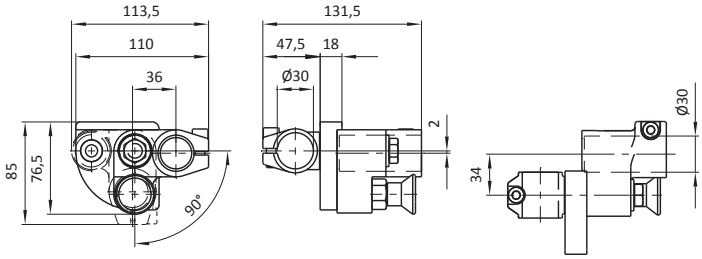

Part No.	Description	m [kg]
104355	MKS30/30-SCE14-3-R	1,66

Description	Part No.
MKS30/30-SCE14-3-L	104354

Type: T-connector, swivelling to the left by 90°, end position down

Material: steel

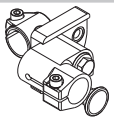

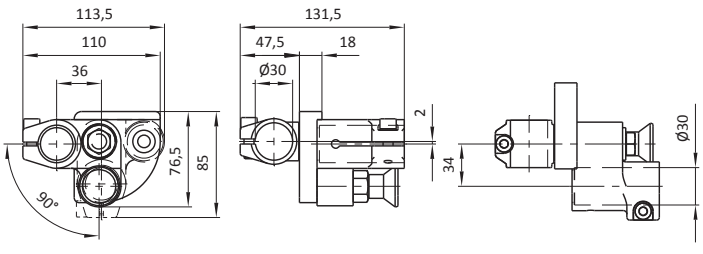

Part No.	Description	m [kg]
104354	MKS30/30-SCE14-3-L	1,66

Taboo Area Cylinder

Description	Part No.
MKS-TZ01-XXX	see table

Type: with rod journal Ø20mm

Material: material mix

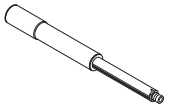

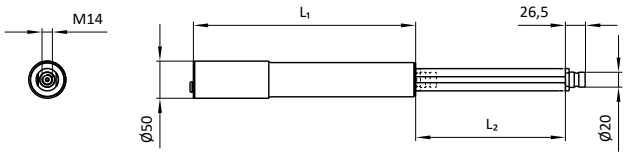

Part No.	Description	L_1 [mm]	L_2 / stroke [mm]
14243	MKS-TZ01-100	199	100
14244	MKS-TZ01-125	224	125
14245	MKS-TZ01-150	249	150
14246	MKS-TZ01-175	274	175
14247	MKS-TZ01-200	299	200
14248	MKS-TZ01-225	324	225
14249	MKS-TZ01-250	349	250

Accessories for Taboo Area Cylinder

Description	Part No.
MKS2020-WK04	13969

Type: with double-clamping 90°, screw orientation 20°

Material: steel

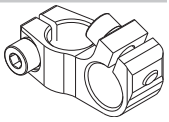

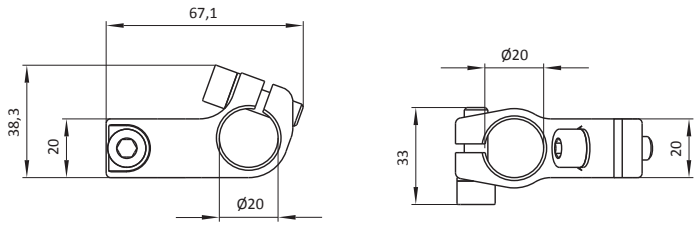

Part No.	Description	m [kg]
13969	MKS20/20-WK04	0,19

Feed Gripper

Description	Part No.
MKS-VG03-XXX	see table

Type: with lateral guiding groove

Material: material mix

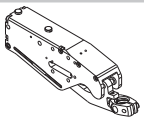

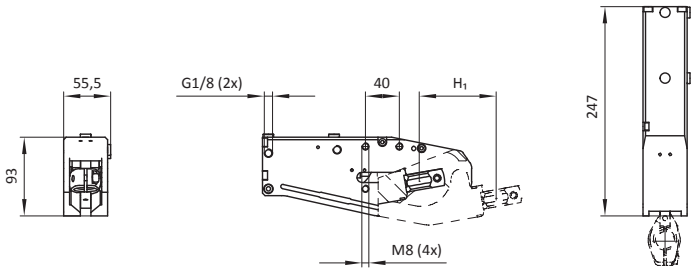

Part No.	Description	H_1 /stroke [mm]	m [kg]
17544	MKS-VG03-90	90	2,1
17624	MKS-VG03-120	120	2,5

Accessories for Taboo Area Cylinder

Description	Part No.
MKS-GB108	17529

Type: ball with flange, with guiding, mounting double-sided

Material: steel



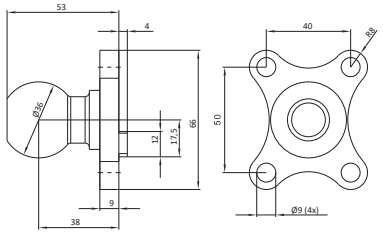

Part No.	Description	m [kg]
17529	MKS-GB108	0,05

10. Racking Carrier

Index

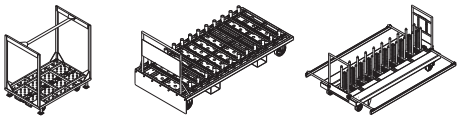

Racking Carrier 284

Racking Carrier

Description	Part No.
MKS-STW03-1	104085

Type: painted in RAL 6011 and RAL 1004

Material: steel

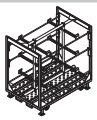

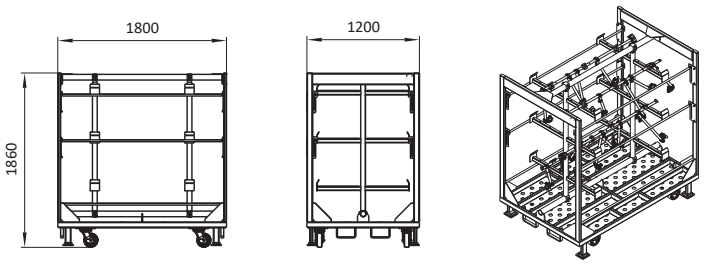

Part No.	Description	Information
104085	MKS-STW03-1	toolings not included

Description	Part No.
MKS-STW08	12287

Type: painted in RAL 6011 and RAL 1004

Material: steel

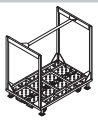

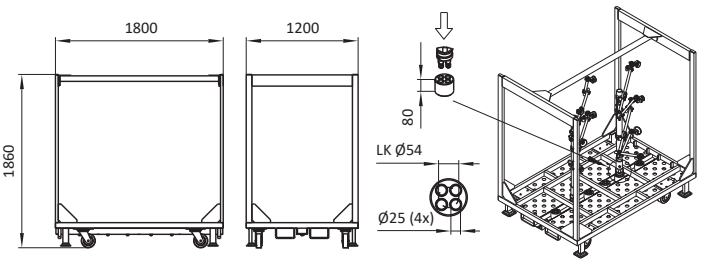

Part No.	Description	Information
12287	MKS-STW08	toolings not included

Description	Part No.
MKS-STW11-3	103089

Type: with doors, with boxes, powder-coated to customer specifications

Material: steel



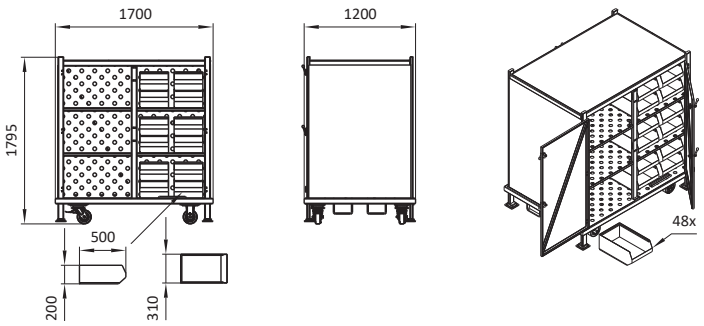

Part No.	Description
103089	MKS-STW11-3

Description	Part No.
MKS-STW11-4	104058

Type: with hooks for crane operation, painted in RAL 5010

Material: steel



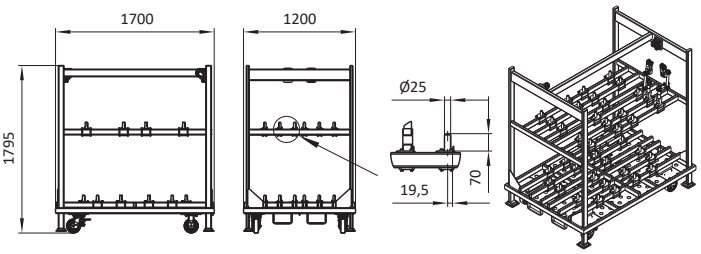

Part No.	Description	Information
104058	MKS-STW11-4	toolings not included

Description	Part No.
MKS-STW11-6	107731

Type: with doors, with boxes

Material: steel



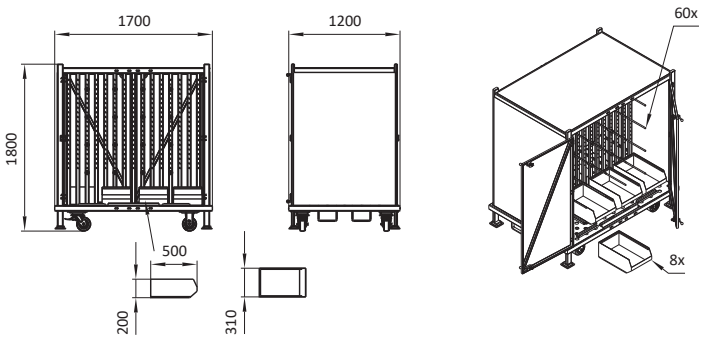

Part No.	Description
107731	MKS-STW11-6

Description	Part No.
MKS-STW29-1	100059

Type: painted in RAL 9005

Material: steel



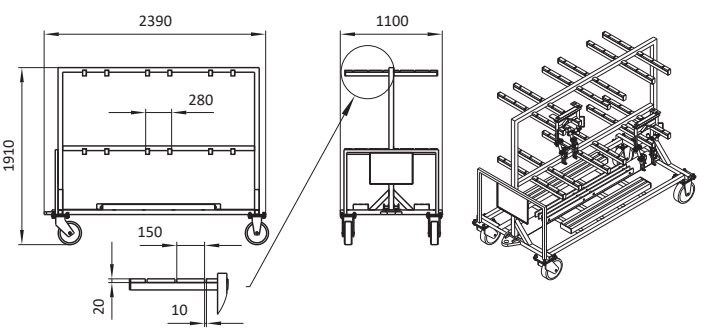

Part No.	Description	Information
100059	MKS-STW29-1	toolings not included

Technical changes and errors are subject to change without notice!
www.springer.group
Document Date: CW 12.2025

Racking Carrier

Description	Part No.
MKS-STW47-8	106488

Type: painted in RAL 2000

Material: steel



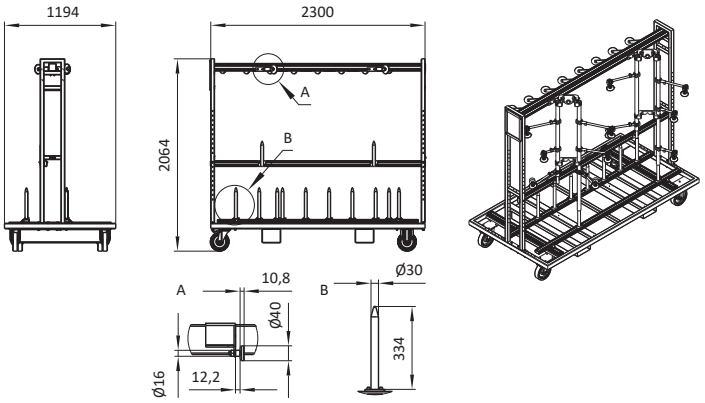

Part No.	Description	Information
106488	MKS-STW47-8	toolings not included

Description	Part No.
MKS-STW55-1	104762

Type: for base tube

Material: steel

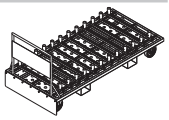

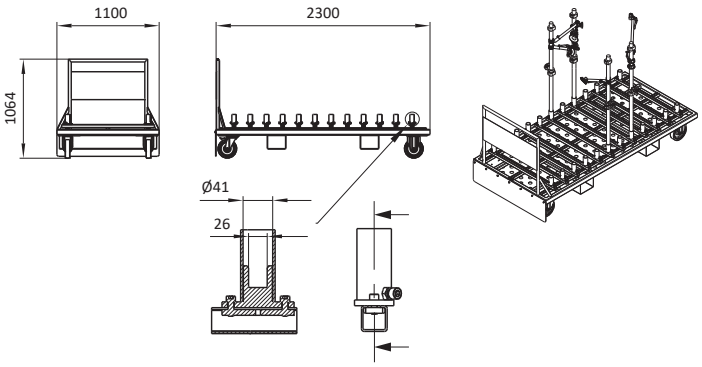

Part No.	Description	Information
104762	MKS-STW55-1	toolings not included

Description	Part No.
MKS-STW55-2	104763

Type: with seats for coding plate

Material: steel



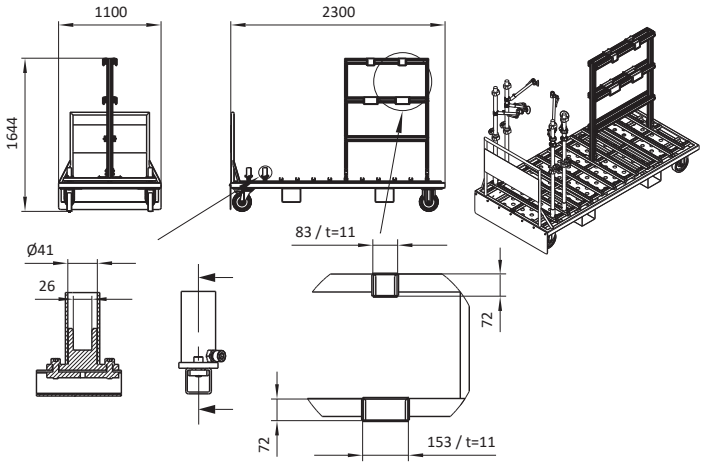

Part No.	Description	Information
104763	MKS-STW55-2	toolings not included

Description	Part No.
MKS-STW48-X	see table

Type: heavy-duty version

Material: steel



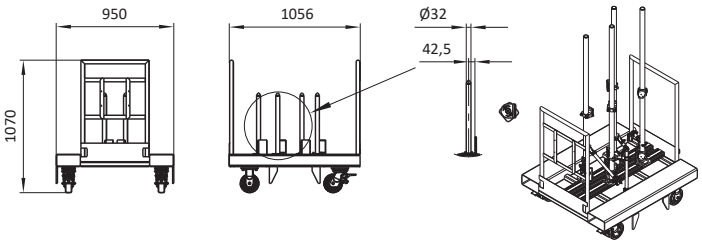

Part No.	Description	Painting	Information
103325	MKS-STW48-2	RAL 5010	toolings not included
107421	MKS-STW48-6	RAL 6034	toolings not included

Racking Carrier

Description	Part No.
MKS-STW34	16899

Type: painted in RAL 6011

Material: material mix



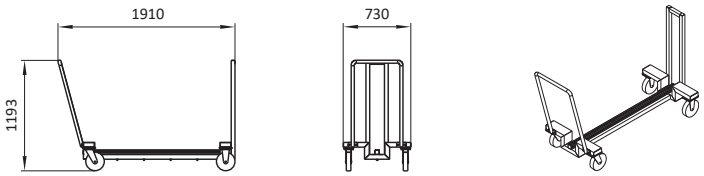

Part No.	Description
16899	MKS-STW34

Description	Part No.
MKS-STW45-X	see table

Type: with tubular coupling seats

Material: steel



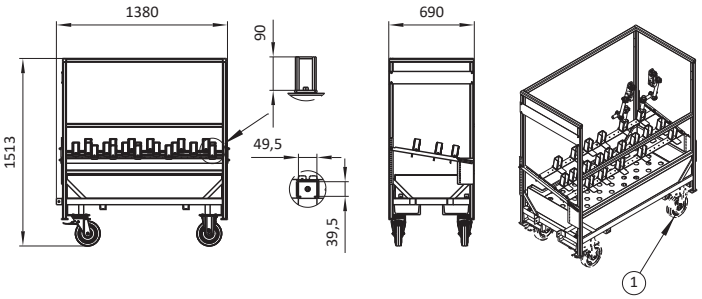

Part No.	Description	with rolls [Pos. 1]	Information
101706	MKS-STW45-3	yes	toolings not included
101707	MKS-STW45-4	no	toolings not included

Description	Part No.
MKS-STW46	101726

Type painted in RAL 1037

Material: steel



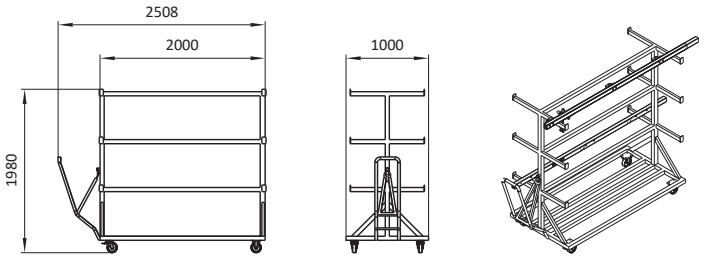

Part No.	Description	Information
101726	MKS-STW46	toolings not included

Description	Part No.
MKS-STW47-7	106487

Type: painted in RAL 2000

Material: steel



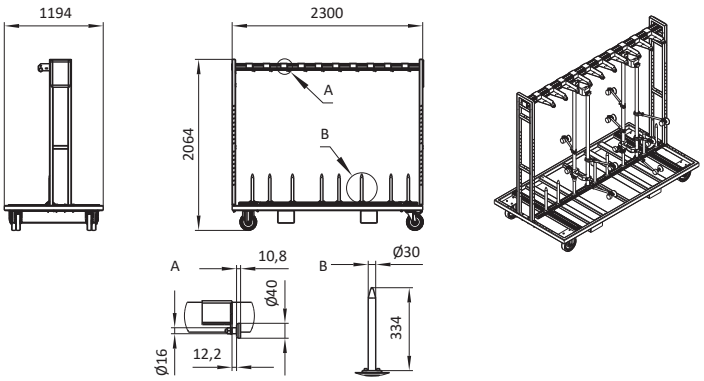

Part No.	Description	Information
106487	MKS-STW47-7	toolings not included

Technical changes and errors are subject to change without notice!
www.springer.group
Document Date: CW 12.2025

Racking Carrier

Description	Part No.
MKS-STW48-X	see table

Type: heavy-duty version

Material: steel



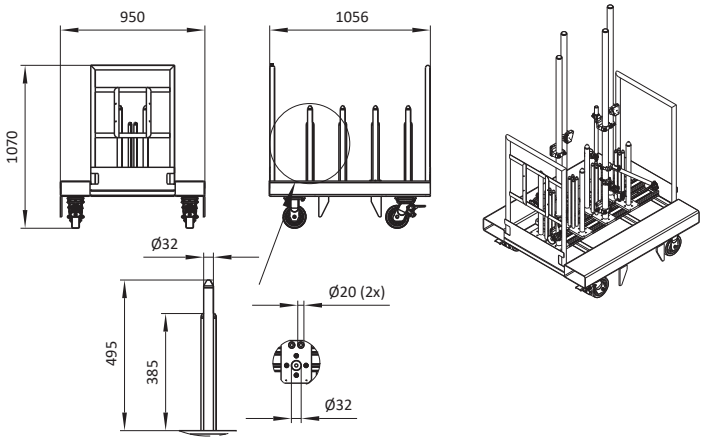

Part No.	Description	Painting	Information
103326	MKS-STW48-3	RAL 5010	toolings not included
107422	MKS-STW48-7	RAL 6034	toolings not included

Description	Part No.
MKS-STW48-4	104116

Type: steel frame painted in RAL 5010

Material: steel

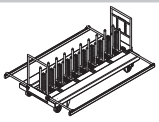

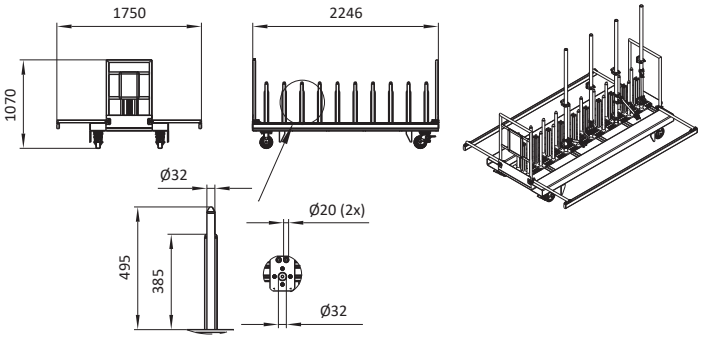

Part No.	Description	Information
104116	MKS-STW48-4	toolings not included

Technical changes and errors are subject to change without notice!
www.springer.group
Document Date: CW 12.2025

11. Hot Forming

Index


Parts Rack 290

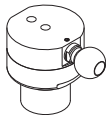
Magnet Gripper..... 291

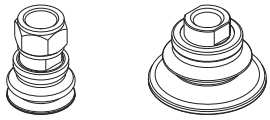
Bellow Suction Cup round 292

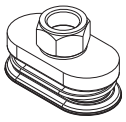
Bellow Suction Cup oval 293

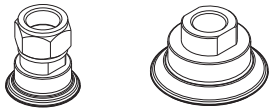
Flat Suction Cup round 294

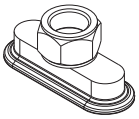
Flat Suction Cup oval 295

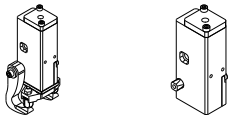
Jaw Gripper..... 296

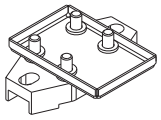
Jaw Gripper Accessories 298

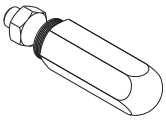
Clamping Screw..... 299

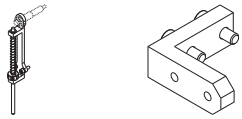
Component Query and Accessories 300

Parts Rack

Description	Part No.
MKS60-GRA21-D1400	106640

Type: with square and round tube

Material: material mix

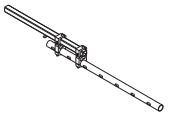

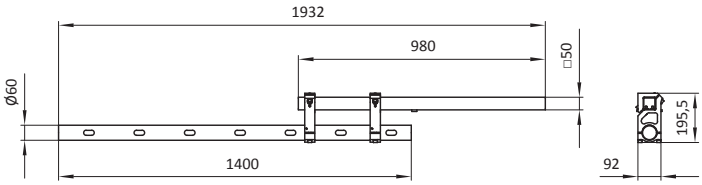

Part No.	Description	m [kg]
106640	MKS60-GRA21-D1400	11,34

Description	Part No.
MKS-GRA22	106683

Type: parts rack

Material: steel



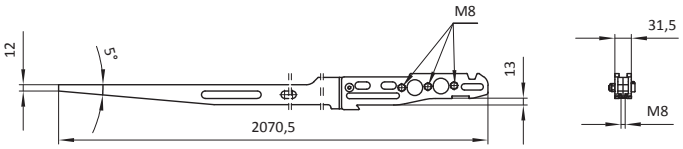

Part No.	Description	m [kg]
106683	MKS-GRA22	13

Magnet Gripper

Description	Part No.
MKS-MGXX-XX-X	see table

Type: single stage, scraper fixed, with ball, initial position magnet retracted, ports (P) G1/8

Material: body: aluminium
ball: steel
seals: NBR

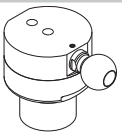

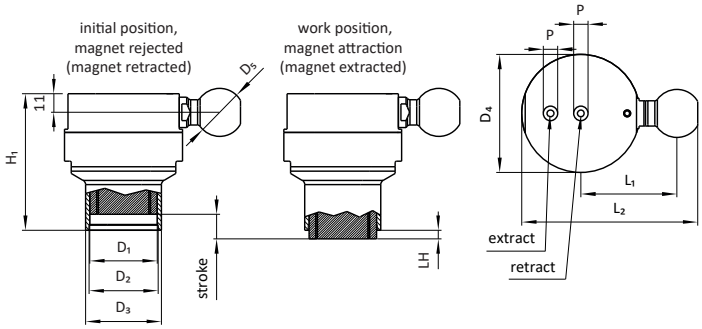

Part No.	Description	Stroke [mm]	D_1 [mm]	D_2 [mm]	D_3 [mm]	D_4 [mm]	D_5 [mm]	H_1 [mm]	L_1 [mm]	L_2 [mm]	LH[1] [mm]	m [kg]
17691	MKS-MG06-45	12	40	41	45	72	28,5	85,5	57	106	0,5	0,90
17869	MKS-MG06-45-1	12	40	41	45	72	32	85,5	62	112	0,5	0,90

[1] overhang magnet in work position

Bellow Suction Cup round

Description	Part No.
MKS-BS03-HT2-XX	see table

Type: round Ø22mm - Ø40mm

Material: suction cup: HT2
connection: brass



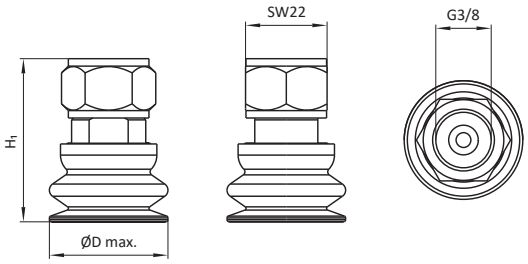

Part No.	Description	D max. [mm]	H_1 [mm]	m [kg]
101358	MKS-BS03-HT2-22	24	41	0,04
101359	MKS-BS03-HT2-30	34	44	0,05
101360	MKS-BS03-HT2-40	45	44	0,05

Description	Part No.
MKS-BS03-HT2-XX	see table

Type: round, Ø50mm - Ø80mm

Material: suction cup: HT2
connection: aluminium

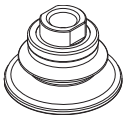

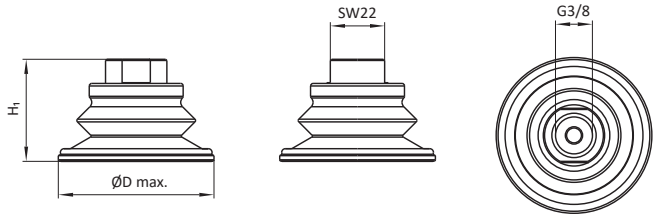

Part No.	Description	D max. [mm]	H_1 [mm]	m [kg]
101361	MKS-BS03-HT2-50	56	36,9	0,04
101362	MKS-BS03-HT2-60	67	41,3	0,05
104896	MKS-BS03-HT2-80	88	49,8	0,09

Bellow Suction Cup oval

Description	Part No.
MKS-BSO03-HT2-XX	see table

Type: oval, 30x60mm - 40x80mm

Material: suction cup: HT2
connection: steel

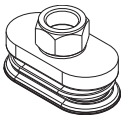

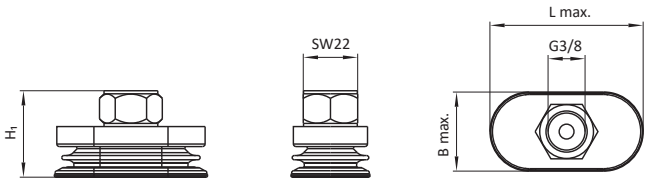

Part No.	Description	B max. [mm]	L max. [mm]	H_1 [mm]	m [kg]
101367	MKS-BSO03-HT2-30x60	33	63	35	0,06
101368	MKS-BSO03-HT2-40x80	43	83	37,7	0,08

Flat Suction Cup round

Description	Part No.
MKS-FS03-HT2-XX	see table

Type: round, Ø30mm - Ø40mm

Material: suction cup: HT2
connection: brass



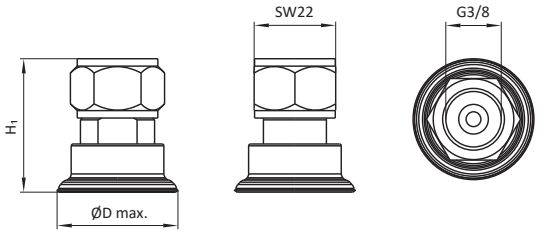

Part No.	Description	D max. [mm]	H_1 [mm]	m [kg]
101354	MKS-FS03-HT2-30	34	36	0,05
101355	MKS-FS03-HT2-40	46	38	0,05

Description	Part No.
MKS-FS03-HT2-XX	see table

Type: round, Ø50mm - Ø60mm

Material: suction cup: HT2
connection: aluminium

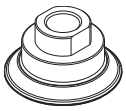

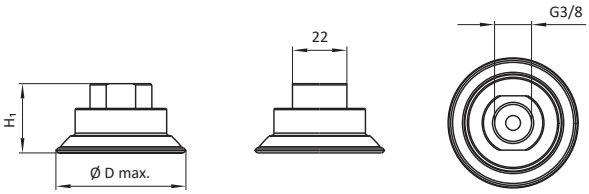

Part No.	Description	D max. [mm]	H_1 [mm]	m [kg]
101356	MKS-FS03-HT2-50	56	28	0,04
101357	MKS-FS03-HT2-60	67	31	0,05

Flat Suction Cup oval

Description	Part No.
MKS-FSO03-HT2-XX	see table

Type: oval, 20x60mm - 50x100mm

Material: suction cup: HT2
connection: brass

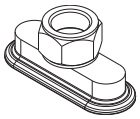

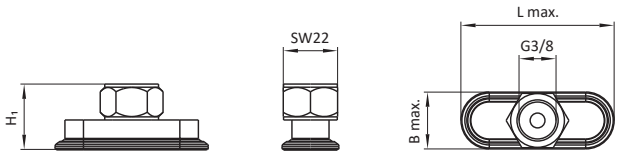

Part No.	Description	B max. [mm]	L max. [mm]	H_1 [mm]	m [kg]
101363	MKS-FSO03-HT2-20x60	25	64	26	0,05
101364	MKS-FSO03-HT2-30x90	34	94	27	0,07
101365	MKS-FSO03-HT2-40x80	43	85	28	0,06
101366	MKS-FSO03-HT2-50x100	54	106	30,5	0,10

Jaw Gripper

Description	Part No.
MKS-KGSP60-30-B-F-S1-15	106845

Type: with double clamping lever arm, 15mm

Material:
- body: aluminium
- clamping lever arm: steel
- ground plate: steel
- seals: FKM

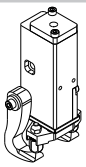

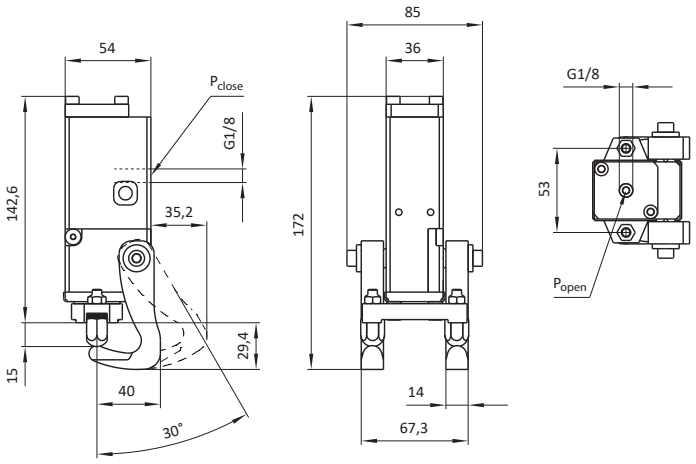

Part No.	Description	m [kg]
106845	MKS-KGSP60-30-B-F-S1-15	1,25

Description	Part No.
MKS-KGSP60-30-B-F-S1-35	106846

Type: with double clamping lever arm, 35mm

Material:
- body: aluminium
- clamping lever arm: steel
- ground plate: steel
- seals: FKM

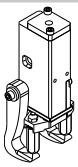

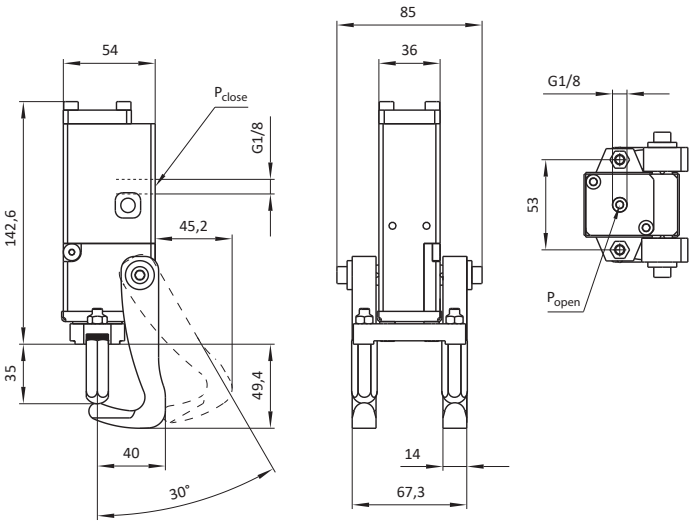

Part No.	Description	m [kg]
106846	MKS-KGSP60-30-B-F-S1-35	1,36

Description	Part No.
MKS-KGSP60-30-L-F-S1-15	106836

Type: with single clamping lever arm 15mm, left

Material:
- body: aluminium
- clamping lever arm: steel
- ground plate: steel
- seals: FKM

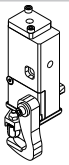

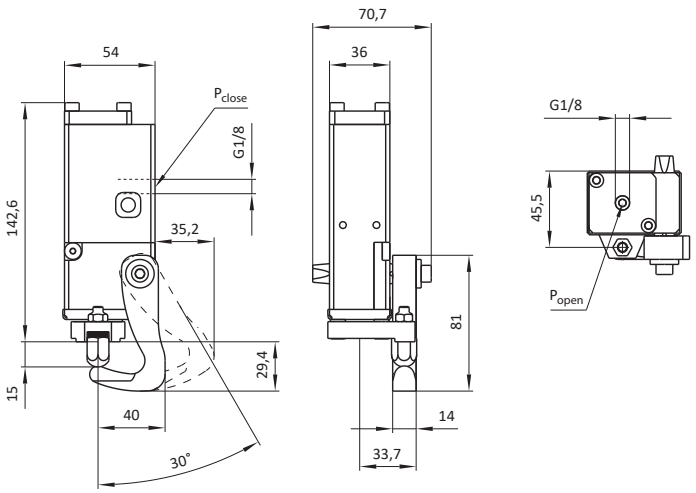

Part No.	Description	m [kg]
106836	MKS-KGSP60-30-L-F-S1-15	1,01

Description	Part No.
MKS-KGSP60-30-L-F-S1-35	106843

Type: with single clamping lever arm 35mm, left

Material:
- body: aluminium
- clamping lever arm: steel
- ground plate: steel
- seals: FKM

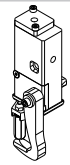

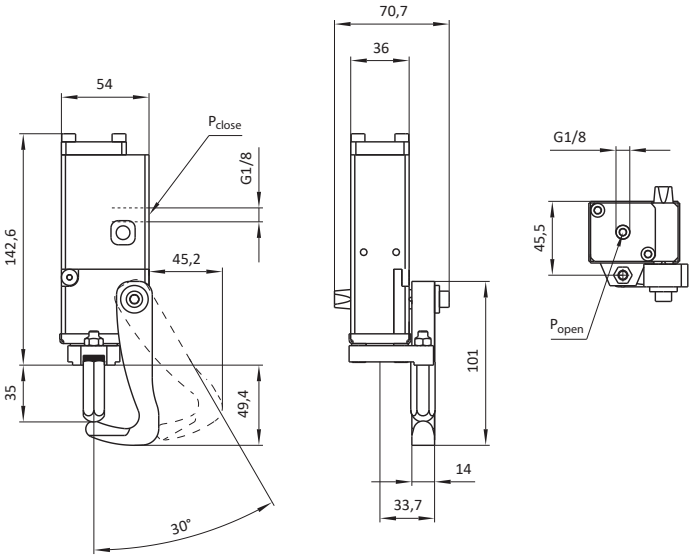

Part No.	Description	m [kg]
106843	MKS-KGSP60-30-L-F-S1-35	1,05

Jaw Gripper

Description	Part No.
MKS-KGSP60-30-R-F-S1-15	106837

Type: with single clamping lever arm 15mm, right

Material: body: aluminium
clamping lever arm: steel
ground plate: steel
seals: FKM

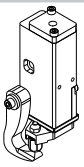

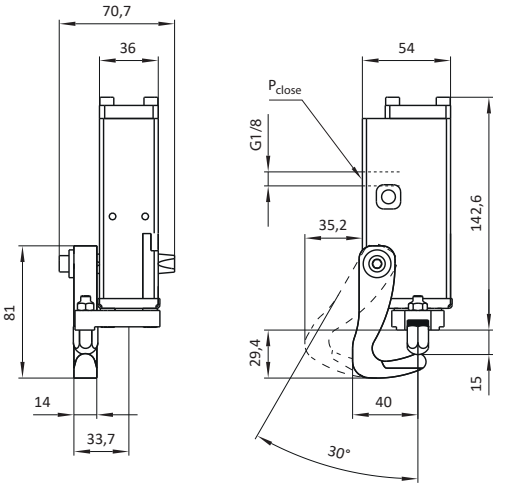

Part No.	Description	m [kg]
106837	MKS-KGSP60-30-R-F-S1-15	1,01

Description	Part No.
MKS-KGSP60-30-R-F-S1-35	106844

Type: with single clamping lever arm 35mm, right

Material: body: aluminium
clamping lever arm: steel
ground plate: steel
seals: FKM

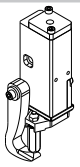

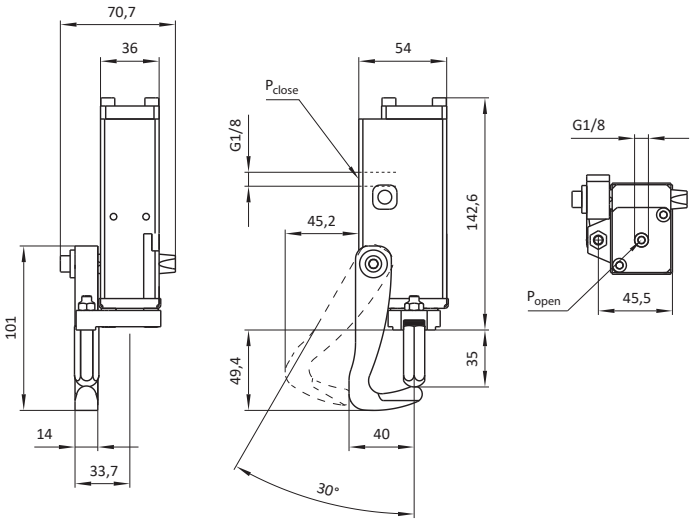

Part No.	Description	m [kg]
106844	MKS-KGSP60-30-R-F-S1-35	1,05

Description	Part No.
MKS-KGSP60-30-X-F	106835

Type: without clamping lever arm

Material: body: aluminium
seals: FKM

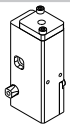

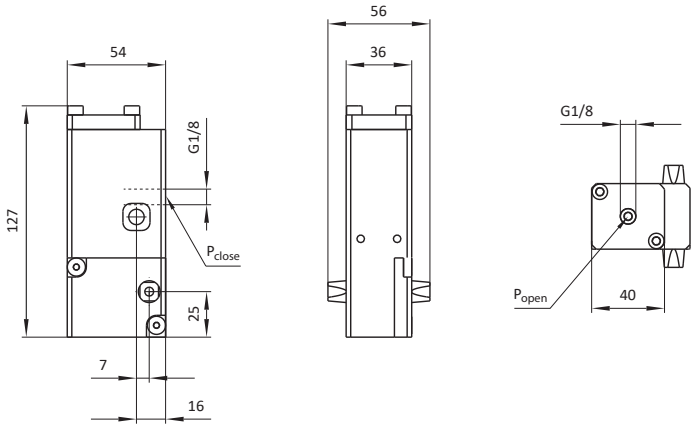

Part No.	Description	m [kg]
106835	MKS-KGSP60-30-X-F	1,05

Jaw Gripper Accessories

Description	Part No.
MKS-ZKGSP03-XX	see table

Type: assembly plate

Material: steel

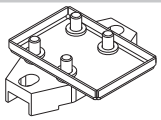

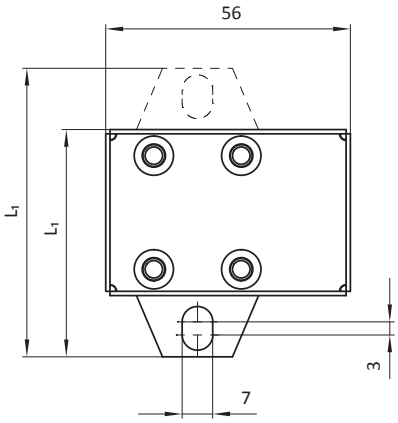

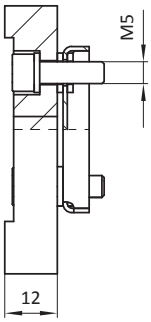

Part No.	Description	L_1 [mm]	m [kg]	Orientation
106840	MKS-ZKGSP03-B	66	0,13	double-sided
106839	MKS-ZKGSP03-LR	52	0,12	single-sidid

Description	Part No.
MKS-ZKGSP04-XX	see table

Type: clamping lever arm

Material: steel

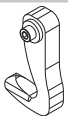

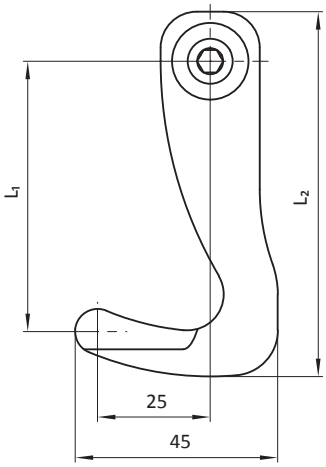

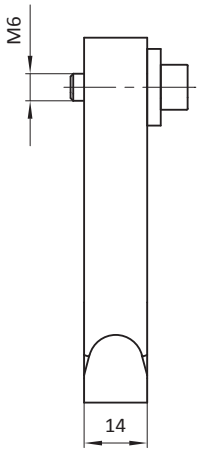

Part No.	Description	L_1 [mm]	L_2 [mm]	m [kg]	Clamping distance [mm]
106841	MKS-ZKGSP04-15	60	81	0,18	15
106847	MKS-ZKGSP04-35	80	101	0,22	35

Clamping Screw

Description	Part No.
MKS-ZKGSP02-XX	see table

Type: with round head, with hexagon surface, single-part

Material: steel

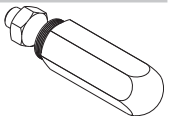

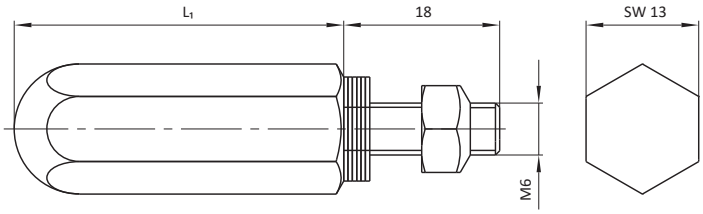

Part No.	Description	L_1 [mm]	m [kg]
106460	MKS-ZKGSP02-15	18	0,03
106461	MKS-ZKGSP02-35	38	0,05

Component Query and Accessories

Description	Part No.
MKS-ABF04	105267

Type: for jaw gripper

Material: material mix



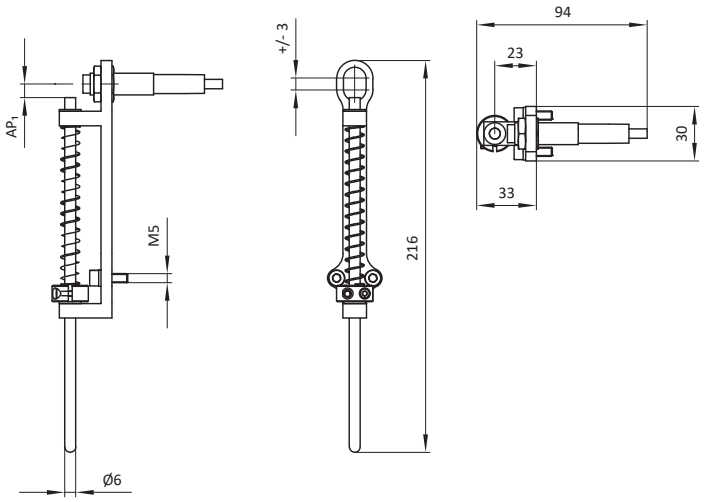

Part No.	Description	AP_1 [mm]	m [kg]
105267	MKS-ABF04	7,5	0,22

Description	Part No.
MKS-ABF04-ZB1	105747

Type: angle for jaw gripper/crash-detection

Material: aluminium

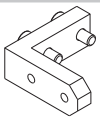

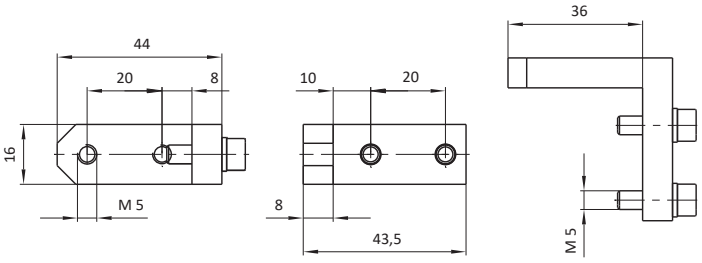

Part No.	Description	m [kg]
105747	MKS-ABF04-ZB1	0,03

Imprint

Edition 12/2025

All technical data is subject to change according to the last update.

Springer GmbH
Stuhrbaum 14
28816 Stuhr
Germany

Office: + 49 (0) 421 24702 0
Fax: + 49 (0) 421 24702 199

E-mail: info@springer.group

Executive board:
Uwe Springer

Commercial register: Amtsgericht Walsrode, HRB 111211

Sales tax identification number: DE 813 152 451

Copyright:
The contents used in this catalogue like pictures, texts, graphics, etc. are copyright protected.

The reproduction, processing, distribution and every other use of these contents which are not exceptionally permitted based on the limits of the copyright law require the explicit prior consent of the respective holder of the rights.

Springer GmbH
Stuhrbaum 14
28816 Stuhr

Executive board:
Uwe Springer

Office +49 421 24 702 0
Fax +49 421 24 702 199

vertrieb@springer.group
www.springer.group

Czech Republic:

Springer Automation CZ s.r.o.
Bezděčín č.p. 82
293 01 Mladá Boleslav

Executive board:
Uwe Springer
Roman Iltis

Office +420 326 734 093
Fax +420 326 210 872

info.cz@springer.group